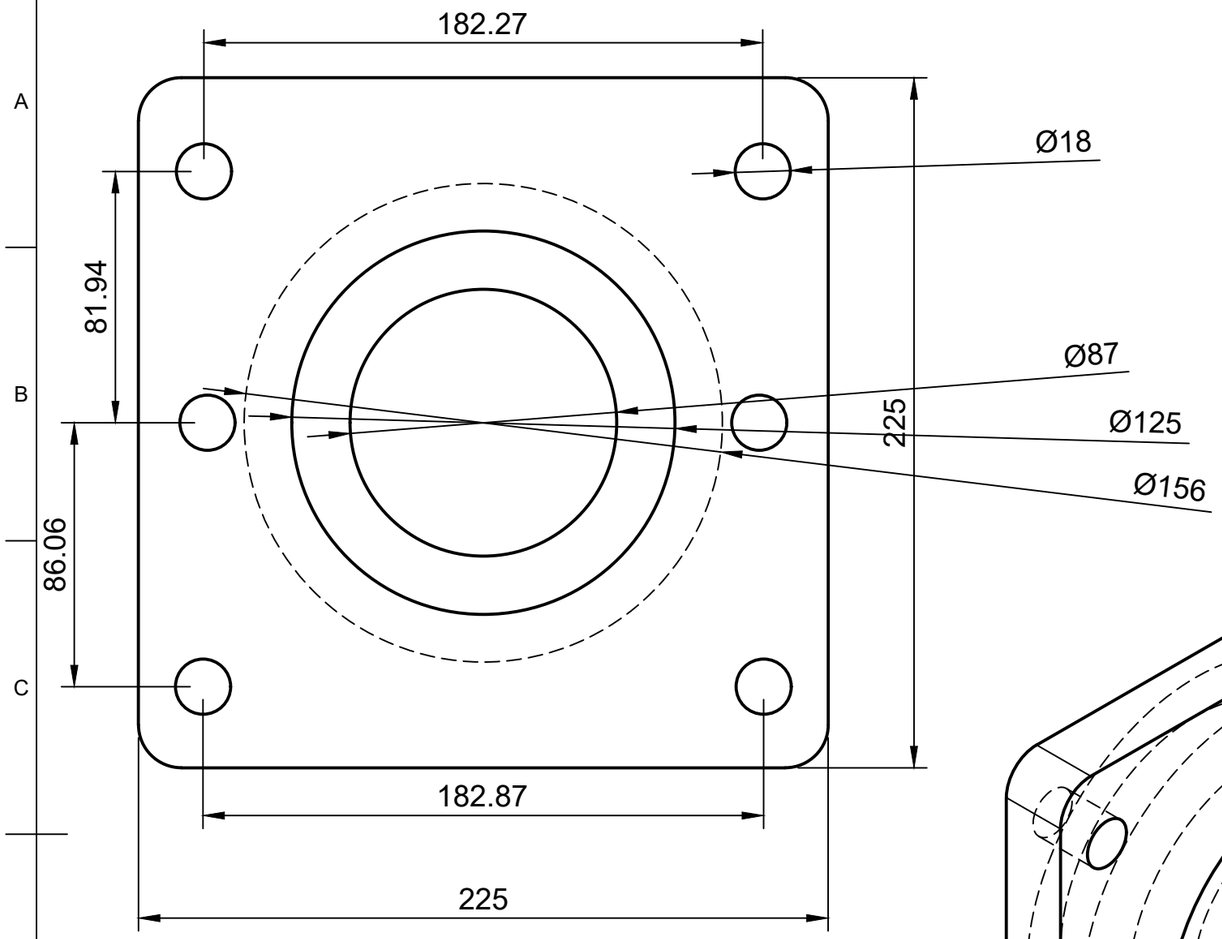

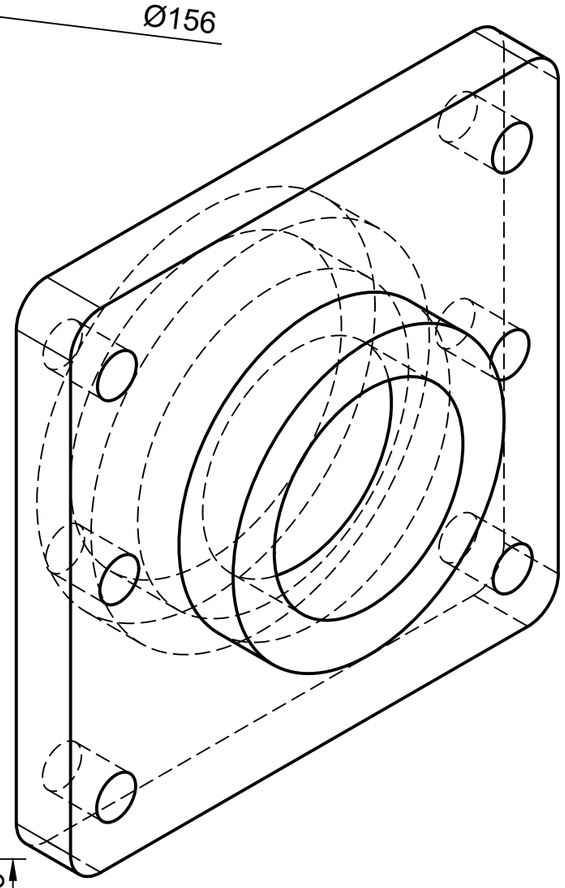

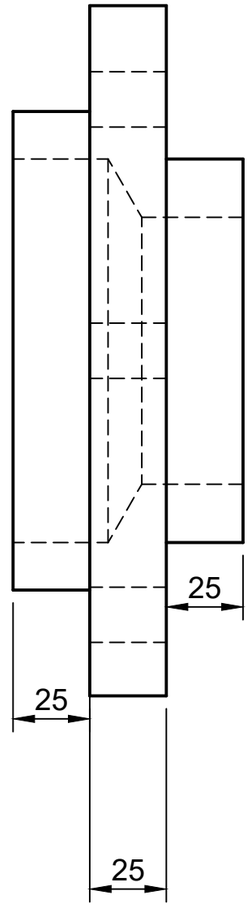

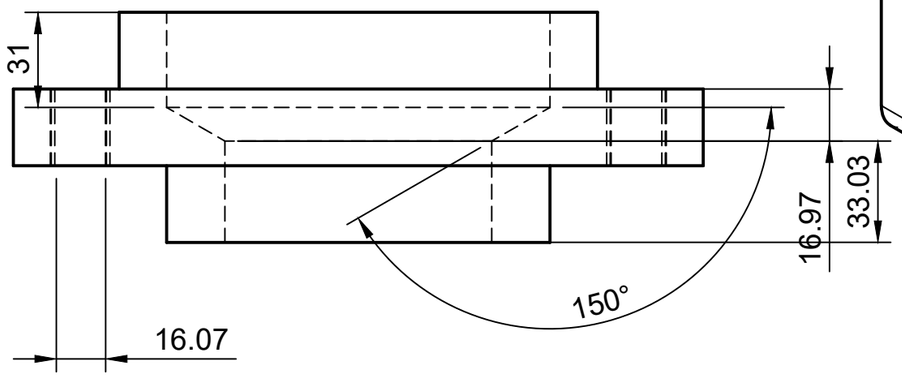

Dept.	Technical reference	Created by Riya Gupta 14-07-2022	Approved by
UE208087		Document type	Document status
		Title: Cover	DWG No.
			Rev. / Date of issue / Sheet 1/1