STM32F030F4P6TR

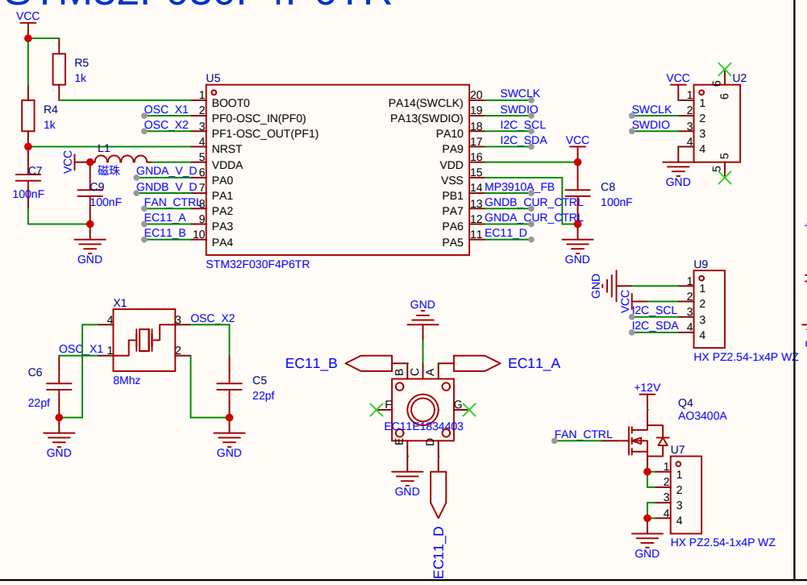

POWER

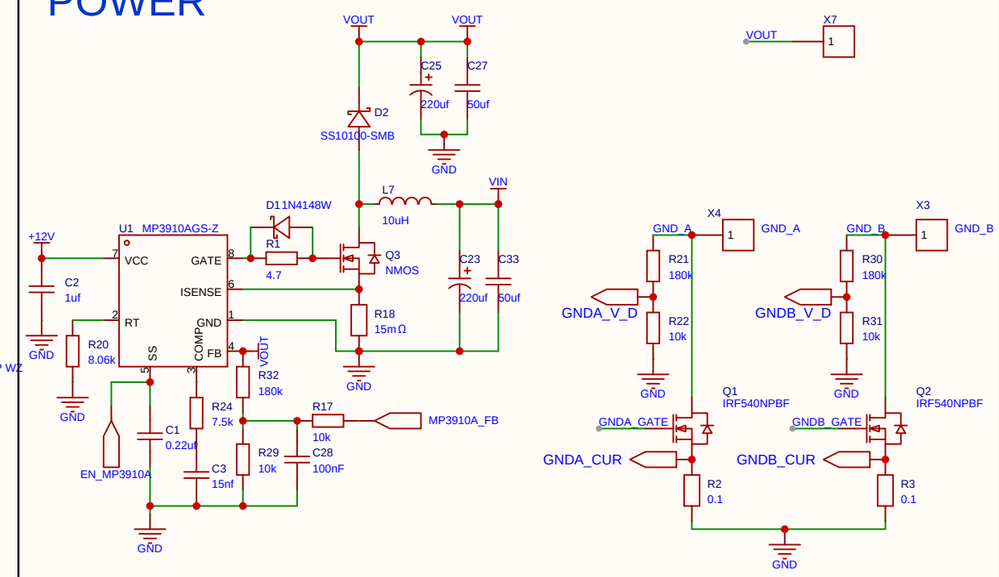

Auxiliary POWER

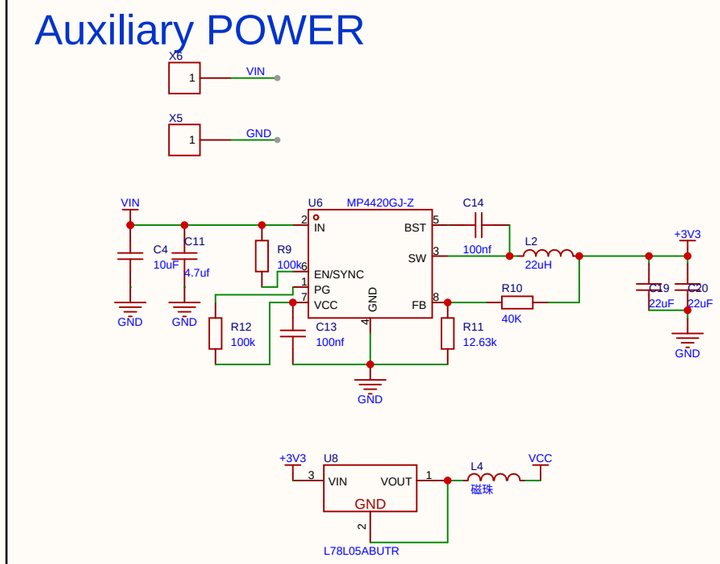
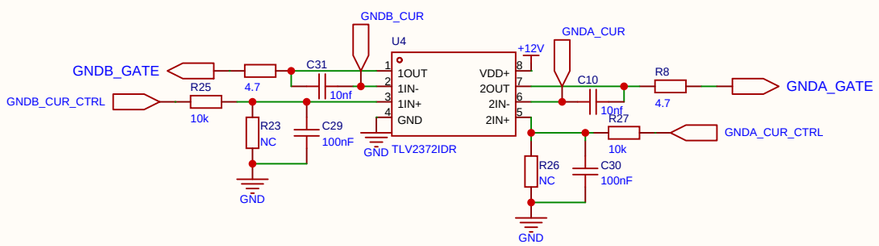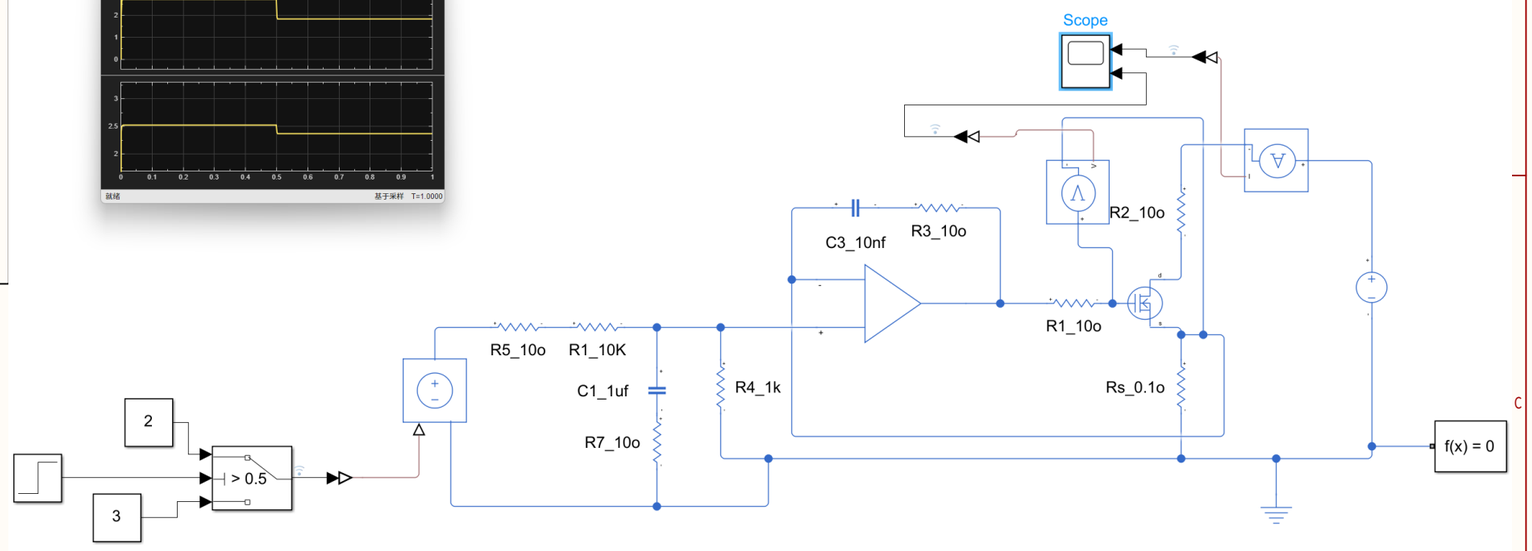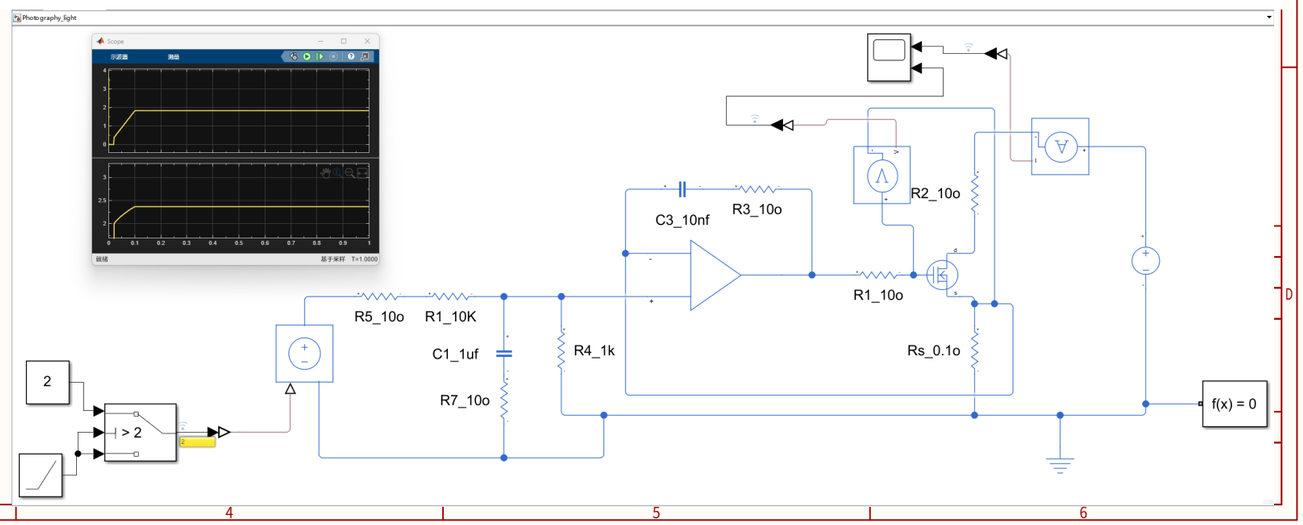
Constant Current Control