MP3398A

Step up, 4 strings, Max. 350mA/string
Analog and PWM dimming, White LED Controller

The Future of Analog IC Technology®

DESCRIPTION

The MP3398A is a step-up controller with 4 current channels, which is designed to drive WLED arrays for large-size LCD-panel backlighting applications. It is flexible to expand the number of LED channels by two or more ICs in parallel sharing a single inductive power source.

The MP3398A uses peak-current mode with fixed switching frequency. The frequency is programmable by an external setting resistor. The MP3398A drives an external MOSFET to boost up the output voltage from a 5V to 28V input supply. It regulates the current in each LED string to the value set by an external current-setting resistor.

The MP3398A applies 4 internal current sources for current balance. The current matching can achieve 2.5% regulation accuracy between strings. Its low regulation voltage on LED current sources reduces power loss.

The MP3398A can support both analog and PWM dimming independently to meet the different dimming-mode request. In addition, rich protection modes are also integrated including OCP, OTP, UVP, OVP, LED short/open protection, inductor/diode short protection.

The MP3398A is available in SOIC16, TSSOP16-EP and SOIC20 packages.

FEATURES

- 4-String, Max 350mA/String WLED Driver
- 5V to 28V Input Voltage Range
- 2.5% Current Matching Accuracy Between Strings
- Programmable Switching Frequency
- PWM and Analog Dimming Mode
- Cascading Capability with a Single Power Source
- LED Open and Short LED Protection
- Programmable Over-Voltage Protection
- Recoverable Thermal Shutdown Protection
- Over Current Protection
- Inductor/Diode short Protection
- Under-Voltage Lockout
- SOIC16, TSSOP16-EP and SOIC20 Packages

APPLICATIONS

- Desktop LCD Flat Panel Displays
- Flat Panel Video Displays
- 2D/3D LCD TVs and Monitors

All MPS parts are lead-free, halogen free, and adhere to the RoHS directive. For MPS green status, please visit MPS website under Quality Assurance.

"MPS" and "The Future of Analog IC Technology" are Registered Trademarks of Monolithic Power Systems, Inc.

TYPICAL APPLICATION

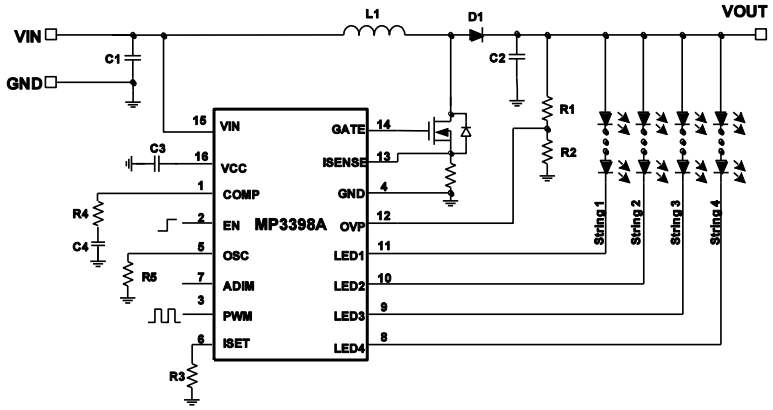

MPS Proprietary Information. Patent Protected. Unauthorized Photocopy and Duplication Prohibited.
© 2018 MPS. All Rights Reserved.

ORDERING INFORMATION

Part Number	Package	Top Marking
MP3398AGS*	SOIC16	*See Below*
MP3398AGF**	TSSOP16-EP	*See Below*
MP3398AGY***	SOIC20	*See Below*

* For Tape & Reel, add suffix –Z (e.g. MP3398AGS–Z);
** For Tape & Reel, add suffix –Z (e.g. MP3398AGF–Z);
*** For Tape & Reel, add suffix –Z (e.g. MP3398AGY–Z);

TOP MARKING (MP3398AGS)

MPSYYWW
MP3398A
LLLLLLLLL

MPS: MPS prefix:
YY: year code;
WW: week code:
MP3398A: part number;
LLLLLLLLL: lot number;

TOP MARKING (MP3398AGF)

MPSYYWW
MP3398A
LLLLLL

MPS: MPS prefix:
YY: year code;
WW: week code:
MP3398A: part number;
LLLLLL: lot number;

TOP MARKING (MP3398AGY)

MPSYYWW
MP3398A
LLLLLLLLL

MPS: MPS prefix:
YY: year code;
WW: week code:
MP3398A: part number;
LLLLLLLLL: lot number;

MPS Proprietary Information. Patent Protected. Unauthorized Photocopy and Duplication Prohibited.
© 2018 MPS. All Rights Reserved.

PACKAGE REFERENCE

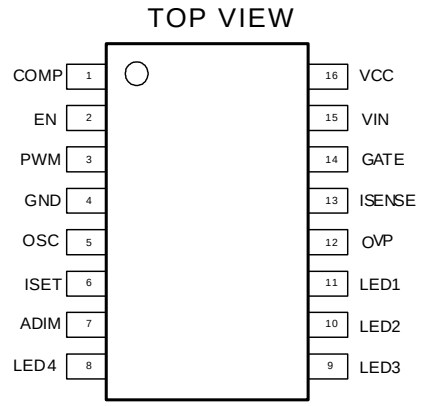

SOIC16

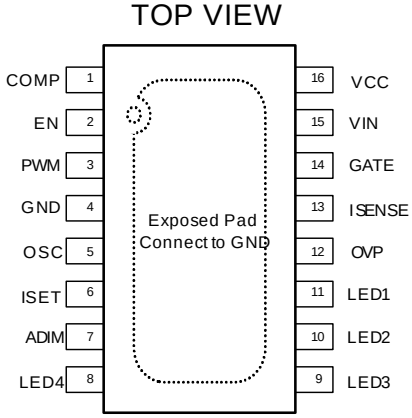

TSSOP16-EP

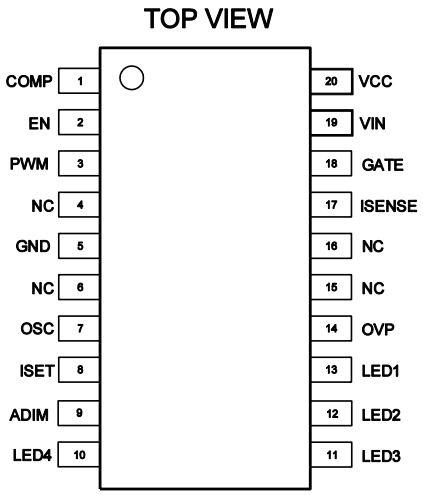

SOIC20

ABSOLUTE MAXIMUM RATINGS (1)

VIN ..... -0.3V to +30V
V_{GATE} ..... -0.3V to +6.5V
VCC ..... -0.3V to +6.8V
V_{LED1} to V_{LED4} ..... -1V to +55V
V_{ISENSE} ..... -0.5V to +6.5V
All Other Pins..... –0.3V to VCC
Continuous Power Dissipation (T_A = 25°C) (2)
SOIC16.....1.56W
TSSOP16-EP.....2.78W
SOIC20 ..... 1.74W
Junction Temperature..... 150°C
Lead Temperature ..... 260°C
Storage temperature..... -60°C to +150°C
ESD Capability Human Body Mode (all pins)
.....3.5kV

Recommended Operating Conditions (3)

Supply Voltage V_{IN} ..... 5V to 28V
LED Current (Backlight) .....10mA to 350mA
Operating Junction Temp. (T_J). -40°C to +125°C

Thermal Resistance (4)

	θ_{JA}	θ_{JC}	
SOIC16	80	35	°C/W
TSSOP16-EP	45	10	°C/W
SOIC20	72	30	°C/W

Notes:

1) Exceeding these ratings may damage the device. The voltage is measured with a 20MHz bandwidth limited oscilloscope.
2) The maximum allowable power dissipation is a function of the maximum junction temperature T_J (MAX), the junction-to-ambient thermal resistance θ_{JA}, and the ambient temperature T_A. The maximum allowable continuous power dissipation at any ambient temperature is calculated by P_D (MAX) = (T_J (MAX)-T_A)/θ_{JA}. Exceeding the maximum allowable power dissipation will cause excessive die temperature, and the regulator will go into thermal shutdown. Internal thermal shutdown circuitry protects the device from permanent damage.
3) The device is not guaranteed to function outside of its operating conditions.
4) Measured on JESD51-7, 4-layer PCB.

MPS Proprietary Information. Patent Protected. Unauthorized Photocopy and Duplication Prohibited.
© 2018 MPS. All Rights Reserved.

ELECTRICAL CHARACTERISTICS (5)

V_{IN} =12V, V_{EN} = 5V, T_A = 25°C, unless otherwise noted.

Parameters	Symbol	Condition	Min	Typ	Max	Units
Operating Input Voltage	V_{IN}		5		28	V
Supply Current (Quiescent)	I_Q	V_{IN}=12V, V_{EN}=5V, no load without switching	1.2	1.35	1,5	mA
Supply Current (Operation)	I_{OP}	V_{IN}=12V, V_{EN}=5V, no load with switching		3	5.5	mA
Supply Current (Shutdown)	I_{ST}	V_{EN}=0V, V_{IN}=12V		0.01	0.5	μA
LDO Output Voltage	V_{CC}	V_{EN}=5V, 7V<V_{IN}<28V, 0<I_{VCC}<10mA	5.4	6	6.6	V
VCC UVLO Threshold	V_{IN_UVLO}	Rising Edge	3.6	4	4.4	V
VCC UVLO Hysteresis				200		mV
EN High Voltage	V_{EN_HIGH}	V_{EN} Rising	1.8			V
EN Low Voltage	V_{EN_LOW}	V_{EN} Falling			0.6	V
STEP-UP CONVERTER						
Gate Driver Impedance (Sourcing)		V_{CC}=6V,V_{GATE}=6V		4.5	7	Ω
Gate Driver Impedance (Sinking)		V_{CC}=6V,I_{GATE}=10mA		2.5	5	Ω
Switching Frequency	f_{SW}	R_{OSC}= 115kΩ	459	540	621	kHz
		R_{OSC}= 374kΩ	150	180	210	kHz
OSC Voltage	V_{OSC}		1.20	1.23	1.26	V
Maximum Duty Cycle	D_{MAX}			93		%
Cycle By Cycle ISENSE Current Limit		Max Duty Cycle	145	180	230	mV
COMP Source Current Limit	$I_{COMP\ SOLI}$	1V<COMP<1.9V		70		μA
COMP Sink Current Limit	$I_{COMP\ SILI}$	1V<COMP<1.9V		17		μA
COMP Trans-conductance	G_{COMP}	ΔI_{COMP}=±10μA		400		μA/V
CURRENT DIMMING						
PWM Input Low Threshold	V_{PWM_LO}	V_{PWM} Falling	0.75			V
PWM Input High Threshold	V_{PWM_HI}	V_{PWM} Rising			1.25	V
Analog Dimming Input Low Threshold	Adim_L	R_{ISET}=9.72k	0.38	0.41	0.44	V
Analog Dimming Input High Threshold	Adim_H		1.44	1.49	1.54	V
LED CURRENT REGULATION						
ISET Voltage	V_{ISET}		1.195	1.22	1.245	V
LEDX Average Current	I_{LED}	R_{ISET}=30.5kΩ	31.3	32.3	33.3	mA
Current Matching (5)		I_{LED}=33.2mA			2.5	%
VCC Max Current Limit	Icc_Limit		50	75	100	mA
LED FET Resistance	R_LED	I_{LED}=10mA		1.7		Ω

MPS Proprietary Information. Patent Protected. Unauthorized Photocopy and Duplication Prohibited.
© 2018 MPS. All Rights Reserved.

ELECTRICAL CHARACTERISTICS *(continued)*

V_{IN} =12V, V_{EN} = 5V, T_A = 25°C, unless otherwise noted.

Parameters	Symbol	Condition	Min	Typ	Max	Units
LEDX Regulation Voltage	V_{LEDX}	I_{LED}=330mA		800		mV
		I_{LED}=60mA		285		mV
PROTECTION						
OVP(Over Voltage Protection) Threshold	V_{OVP_OV}	Rising Edge	1.20	1.23	1.26	V
OVP(Over Voltage Protection) Threshold HYS	V_{OVP_HYS}	HYS		80		mV
OVP UVLO threshold	V_{OVP_UV}	Step-up Converter Fails	30	75	120	mV
LEDX UVLO Threshold	V_{LEDX_UV}		120	200	280	mV
LEDX Over Voltage Threshold	V_{LEDX_OV}		5.8	6.3	6.8	V
LED Short Fault Cycles	T_LED_OV			4096		
Latch-Off Current Limit	V_{LMT}		560	640	720	mV
Thermal Protection Threshold	T_{ST}			150		°C
Thermal Protection Hysteresis				25		°C

Notes:

5) Matching is defined as the difference of the maximum to minimum current divided by 2 times average currents.

MPS Proprietary Information. Patent Protected. Unauthorized Photocopy and Duplication Prohibited.
© 2018 MPS. All Rights Reserved.

TYPICAL CHARACTERISTICS

I_Q vs. Temperature

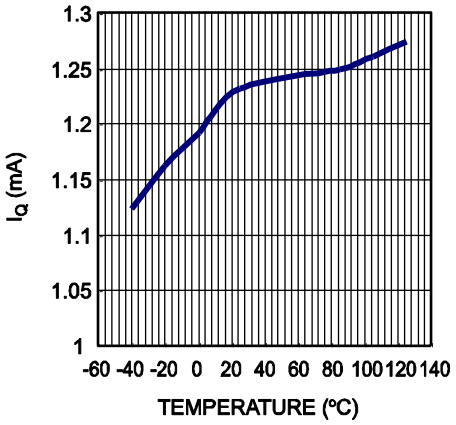

OVP Voltage vs. Temperature

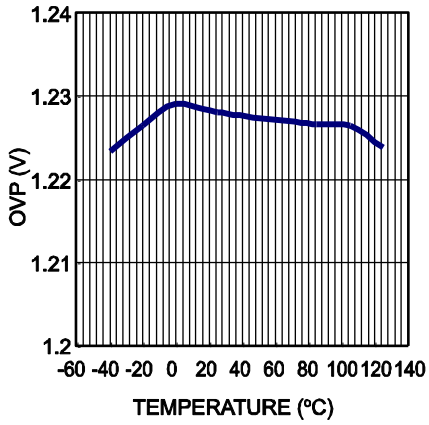

VCC UVLO vs. Temperature

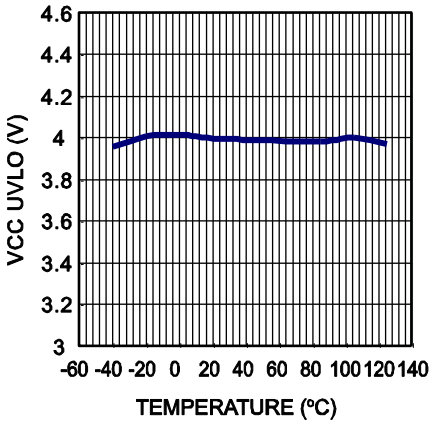

V_{adim_L} vs. Temperature

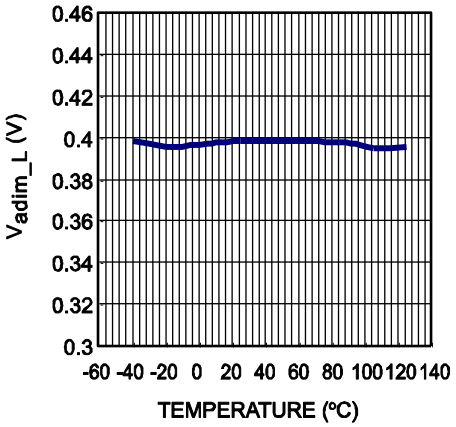

I_{LED_AVG} vs. Temperature

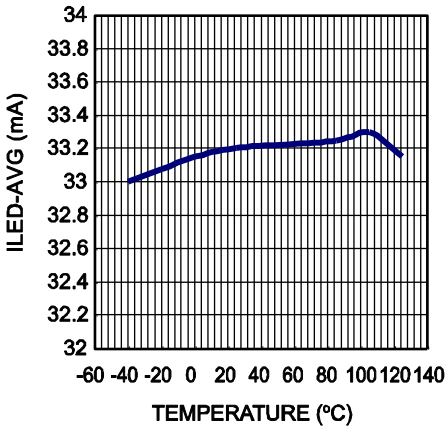

I_{LED} Matching vs. Temperatue

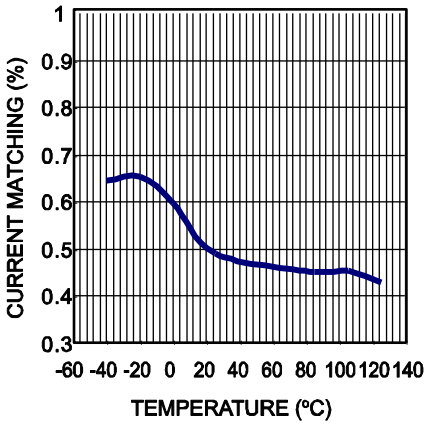

SW Frequency vs. Temperature (R_{OSC}=374kΩ)

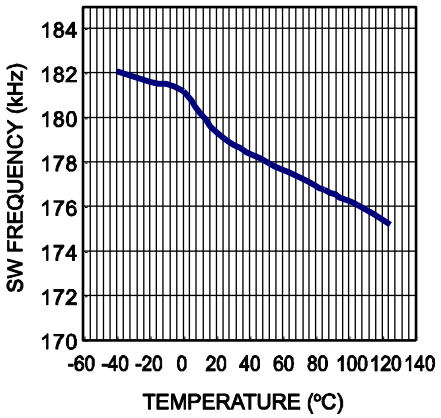

I_{SENSE_LIMIT} vs. Temperature

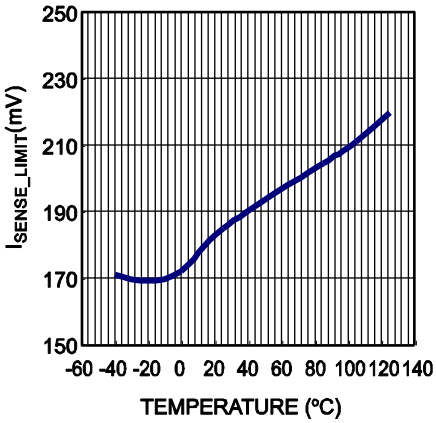

V_{LEDX} Regulation Voltage vs. Temperature

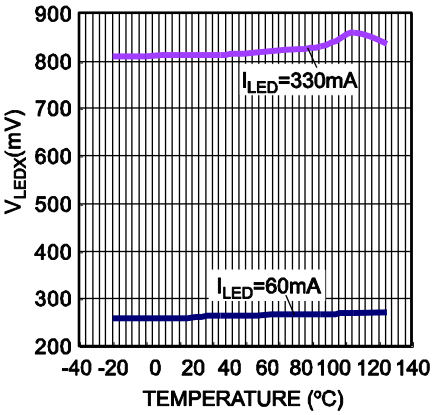

MPS Proprietary Information. Patent Protected. Unauthorized Photocopy and Duplication Prohibited.
© 2018 MPS. All Rights Reserved.

TYPICAL PERFORMANCE CHARACTERISTICS

V_{IN} = 12V, V_{OUT} = 30V, L = 33µH, I_{LED}=120mA/String, 4 strings, T_A = 25°C, unless otherwise noted.

Efficiency vs. Input Voltage

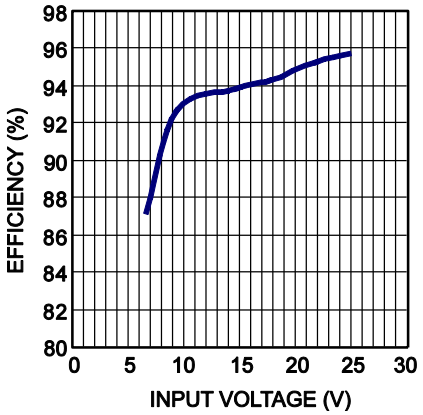

MPS Proprietary Information. Patent Protected. Unauthorized Photocopy and Duplication Prohibited.
© 2018 MPS. All Rights Reserved.

TYPICAL PERFORMANCE CHARACTERISTICS *(continued)*

V_{IN} = 12V, V_{OUT} = 30V, L = 33μH, T_A = 25°C, unless otherwise noted.

Steady State

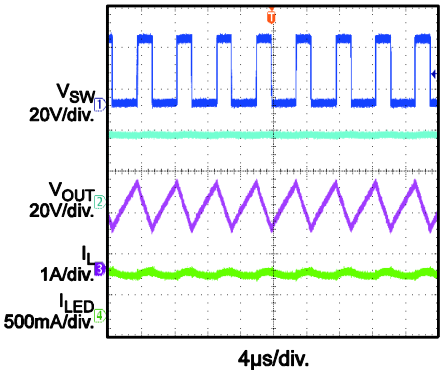

V_{IN} Power On

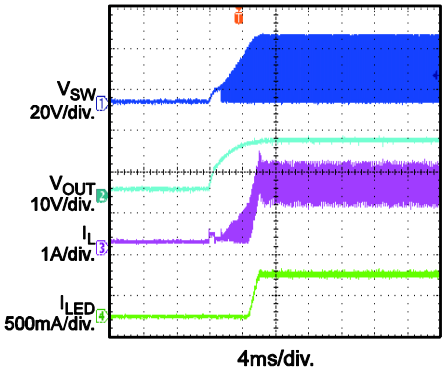

EN Power On

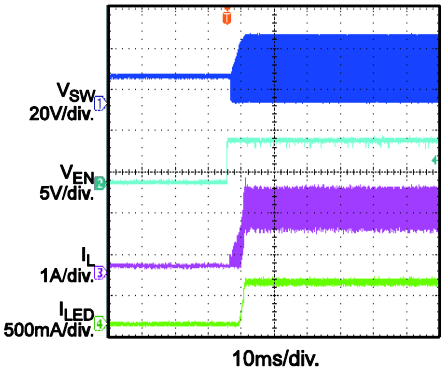

Analog Dimming
V_{DIM} = 0.9V

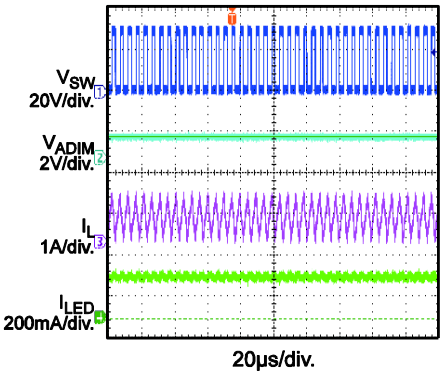

PWM Dimming
f_{PWM} = 200Hz, D_{PWM} = 50%

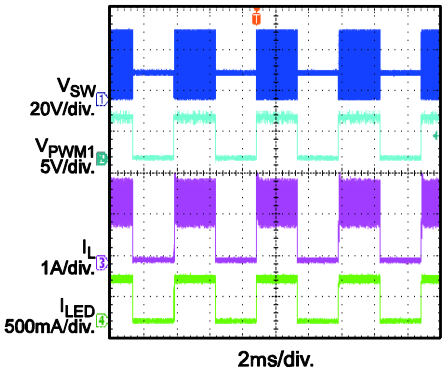

Open LED Protection
Open One LED String at Working

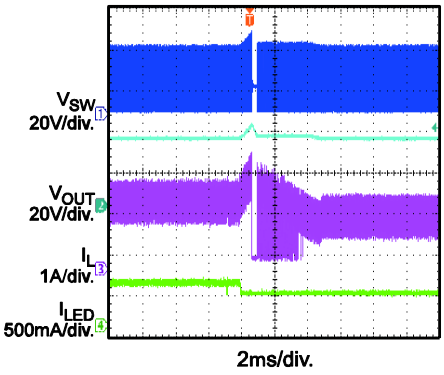

Short LED Protection
Short V_{OUT} to LEDx at Working

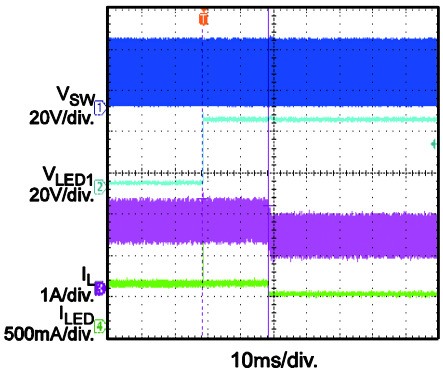

Short Inductor Protection

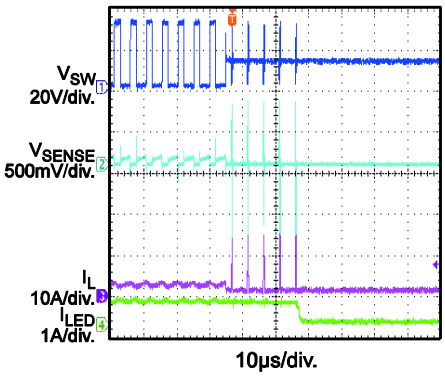

Short Diode Protection

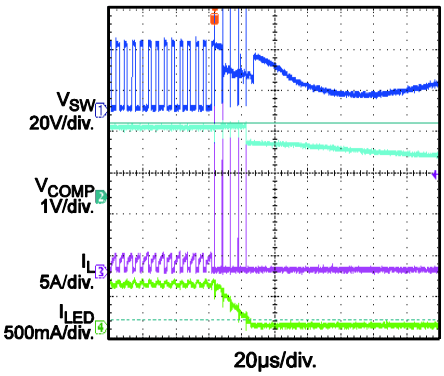

MPS Proprietary Information. Patent Protected. Unauthorized Photocopy and Duplication Prohibited.
© 2018 MPS. All Rights Reserved.

PIN FUNCTIONS

TSSOP16-EP &SOIC16 Pin #	SOIC20 Pin #	Name	Description
1	1	COMP	Step-up Converter Compensation Pin. This pin compensates the regulation control loop. Connect a ceramic capacitor from COMP to GND.
2	2	EN	Enable Control Input. A voltage greater than 1.8V will turn the part on and less than 0.6 V will turn the part off. Do not let this pin float.
3	3	PWM	Input Signal for PWM Brightness Control. By applying a PWM signal on this pin, the LED current can be chopped and the average current is equal to Iset*D_dim (I_set is the LED current value set by a resistor connected to PIN 6; D_dim is the duty cycle of the PWM dimming duty cycle). Make sure the PWM amplitude voltage level > V_{PWM_HI} and the low level voltage < V_{PWM_HI}. The input PWM signal frequency mainly determines the LED current dimming ratio. Lower dimming frequency, smaller dimming current can be gotten. In general, 200Hz to 2kHz can be used to cover most of the customers' LED current dimming requests. Internally weakly pulled to GND if this pin is floated. If PWM dimming is not required, pulling this pin to high voltage(1.25V<Vpwm<5V).
4	5	GND	Ground.
5	7	OSC	Switching Frequency Set. Connect a resistor between OSC and GND to set the step-up converter switching frequency. The voltage at this pin is regulated to 1.23V. The clock frequency is proportional to the current sourced from this pin.
6	8	ISET	LED Current Set. Tie a current-setting resistor from this pin to ground to program the current in each LED string. This pin voltage is regulated to 1.225V. The LED current is proportional to the current through the ISET resistor.
7	9	ADIM	Signal Input for Analog Brightness Control. The LED current amplitude is determined by this pin and the input signal can be either a PWM signal or a DC voltage signal. An internal RC filter (10Mohm resistor and 100pF capacitor) is integrated to this pin. So, if a PWM signal applied to this pin, >20kHz frequency is recommended to get a better PWM signal filtering performance and make sure the amplitude voltage is higher than 1.5V and low level voltage is less than 0.4V. For DC signal input, please apply a DC input signal range from 0.4V to 1.5V to linearly set the LED current from 0% to 100%. Internally weakly pulled to GND if this pin is floated. If Analog dimming is not required, pulling this pin to high voltage(1.54V<Vpwm<5V).
8	10	LED4	LED String 4 Current Input. This pin is the open-drain output of an internal dimming control switch. Connect the LED String 4 cathode to this pin.
9	11	LED3	LED String 3 Current Input. This pin is the open-drain output of an internal dimming control switch. Connect the LED String 3 cathode to this pin.
10	12	LED2	LED String 2 Current Input. This pin is the open-drain output of an internal dimming control switch. Connect the LED String 2 cathode to this pin.
11	13	LED1	LED String 1 Current Input. This pin is the open-drain output of an internal dimming control switch. Connect the LED String 1 cathode to this pin.
12	14	OVP	Over-Voltage Protection Input. Connect a resistor divider from output to this pin to program the OVP threshold. When this pin voltage reaches 1.23V, the MP3398A triggers Over Voltage Protection mode.

MPS Proprietary Information. Patent Protected. Unauthorized Photocopy and Duplication Prohibited.
© 2018 MPS. All Rights Reserved.

PIN FUNCTIONS *(continued)*

TSSOP16-EP &SOIC16 Pin #	SOIC20 Pin #	Name	Description
13	17	ISENSE	Current Sense Input. During normal operation, this pin senses the voltage across the external-inductor current-sensing resistor (R_{SENSE}) for peak-current–mode control and also to limit the inductor current during every switching cycle. If this pin is not used for cascading applications, tie this pin to GND; do not let this pin float.
14	18	GATE	Step-up Converter Power Switch Gate Output. This pin drives the external power N-MOS device.
15	19	VIN	Supply Input. VIN supplies the power to the chip, as well as the step-up converter switch. Drive VIN with a 5V to 28V power source. Must be locally bypassed.
16	20	VCC	The Internal 6V Linear Regulator Output. VCC provides power supply for the external MOSFET switch gate driver and the internal control circuitry. Bypass VCC to GND with a ceramic capacitor.
	4, 6, 15, 16	NC	No Connect.

MPS Proprietary Information. Patent Protected. Unauthorized Photocopy and Duplication Prohibited.
© 2018 MPS. All Rights Reserved.

BLOCK DIAGRAM

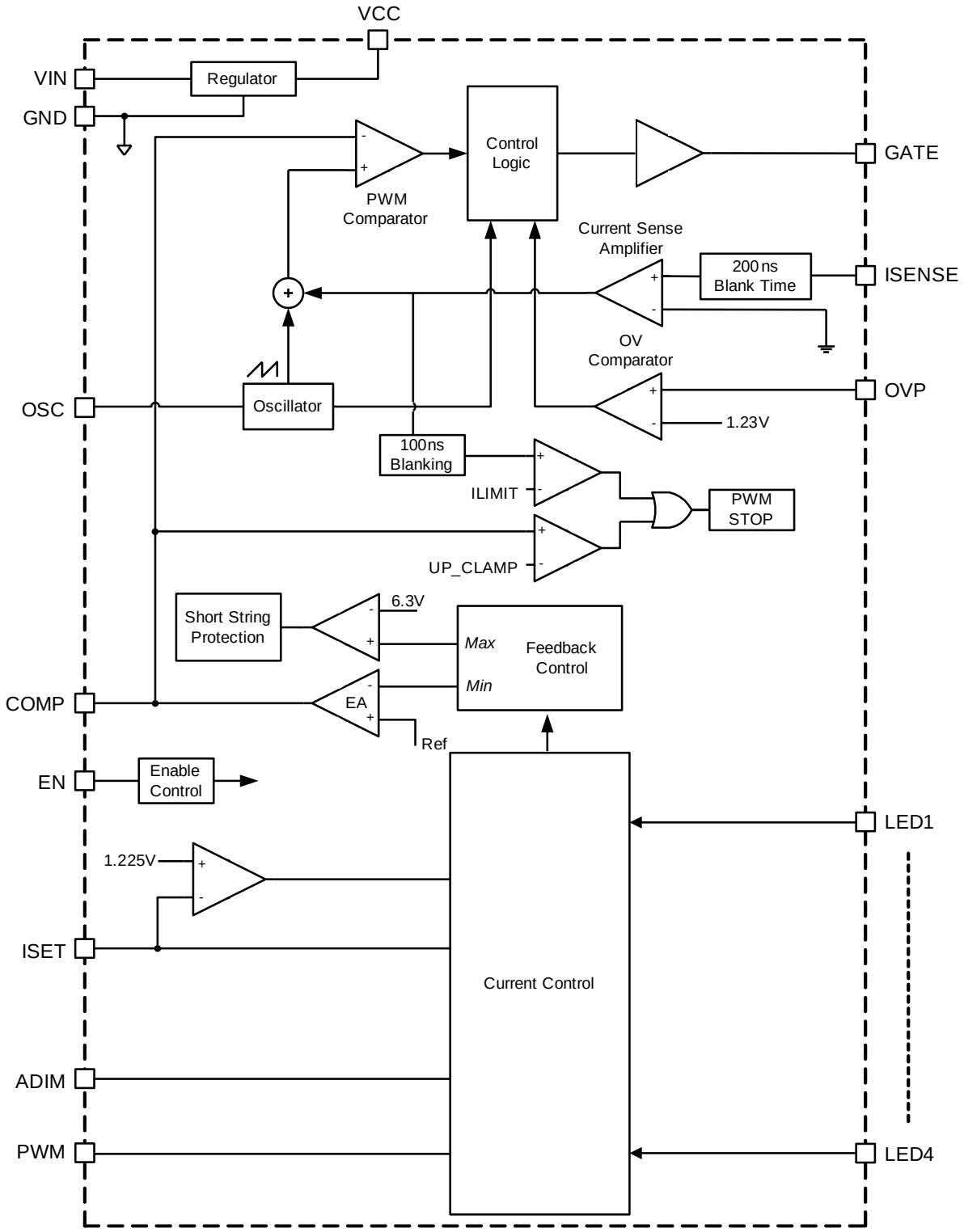

Figure 1—Functional Block Diagram

MPS Proprietary Information. Patent Protected. Unauthorized Photocopy and Duplication Prohibited.
© 2018 MPS. All Rights Reserved.

OPERATION

The MP3398A is a step-up converter with peak-current mode. It employs 4 channels of current sources to drive up to 4 strings of white LEDs.

Internal 6V Regulator

The MP3398A includes an internal linear regulator (VCC). When VIN is greater than 6.5V, this regulator outputs a 6V power supply to the external MOSFET switch gate driver and the internal control circuitry. The VCC voltage drops to 0V when the chip shuts down. The MP3398A features under-voltage lockout (UVLO). The chip is disabled until VCC exceeds the UVLO threshold. The UVLO hysteresis is approximately 200mV.

System Startup

When enabled, the MP3398A checks the topology connection first. The chip monitors the over-voltage protection (OVP) pin to see if the Schottky diode is not connected or if the boost output is shorted to GND. An OVP voltage of less than 75mV will disable the chip. The MP3398A also checks other safety limits, including UVLO and over-temperature protection (OTP), over-current protection after passing the OVP test. If all the protection tests pass, the chip then starts boosting the step-up converter with an internal soft-start.

It is recommended that the enable signal occurs after the establishment of the input voltage and PWM dimming signal during the start-up sequence to avoid large inrush current.

For better power off performance, the recommended power off sequence is as below figure shows:

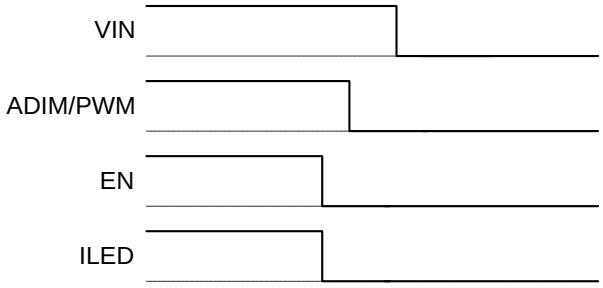

Figure 2—Power Off Sequence

Step-Up Converter

The converter operating frequency is programmable (from 100kHz to 500kHz) with a external resistor connected to the OSC pin. This helps to optimize the size of external components and the efficiency.

At the beginning of each switching cycle, the internal clock turns on the external MOSFET (In normal operation, the minimum turn on time is 200ns). A stabilizing ramp added to the output of the current sense amplifier prevents sub-harmonic oscillations for duty cycles greater than 50 percent. This result is fed into the PWM comparator. When this resulting voltage reaches the output voltage of the error amplifier (V_{COMP}) the external MOSFET turns off.

The output voltage of the internal error amplifier is an amplified signal of the difference between the reference voltage and the feedback voltage. The converter automatically chooses the lowest active LEDX pin voltage to provide a high-enough bus voltage to power all the LED arrays.

If the feedback voltage drops below the reference, the output of the error amplifier increases. This results in more current flowing through the MOSFET, thus increasing the power delivered to the output. This forms a closed loop that regulates the output voltage.

Under light-load operation, especially in the case of $V_{OUT} \approx$ VIN, the converter runs in pulse-skipping mode where the MOSFET turns on for a minimum on-time of approximately 200ns, and then the converter discharges the power to the output for the remaining period. The external MOSFET remains off until the output voltage needs to be boosted again.

Dimming Control

The MP3398A provides two dimming methods: PWM or analog dimming mode.

For PWM dimming, apply a PWM signal to PWM pin. The LED current is chopped by this PWM signal and the average LED current is equal to Iset*D_dim where D_dim is the duty cycle of PWM dimming signal and Iset is the LED current amplitude.

MPS Proprietary Information. Patent Protected. Unauthorized Photocopy and Duplication Prohibited.
© 2018 MPS. All Rights Reserved.

For analog dimming, either a PWM signal or DC signal can be applied to ADIM pin.

When a PWM signal is applied to ADIM pin, this signal will be filtered by the internal RC filter. The LED current amplitude is equal to Iset*D_Dim where D_dim is the duty cycle of PWM dimming signal and Iset is the LED current amplitude. 20kHz or higher PWM signal is recommended to get the better filtering performance.

When a DC signal is applied to ADIM pin, the voltage range in 0.4V to 1.5V directly sets the LED current linearly from 0% to 100%.

Open String Protection

Open string protection is achieved through the OVP pin and the LED(1 to 4) pins. If one or more strings are open, the respective LEDX pins are pulled to ground and the IC keeps charging the output voltage until it reaches the over-voltage protection (OVP) threshold. If the OVP point has been triggered for >4us, the chip stops switching and marks the strings which have an LEDX pin voltage lower than 196mV. Once marked, the remaining LED strings force the output voltage back into tight regulation. The string with the largest voltage drop determines the output regulation.

The MP3398A will always attempt to light at least one string. If all strings are open, the MP3398A shuts down the step-up converter. The strings will remain in this marked state until the chip reset.

Short String Protection

The MP3398A monitors the LEDX pin voltages to determine if a short string fault has occurred. If one or more strings are shorted, the respective LEDX pins tolerate high voltage stress. If an LEDX pin voltage is higher than 6.3V, this condition triggers the detection of a short string. When a short string faults (LEDX over-voltage fault) keeps for 4096 switching clocks, the fault string is marked OFF and disabled. Once a string is marked OFF, it disconnects from the output voltage loop. The marked LED strings shut off completely until the part restarts. In order to prevent mis-triggering short LED protection when open LED string or sharp ADIM, the short LED protection function is disabled when Vledx of all used LED channels are higher than 1.5V.

Inductor/Diode short Protection

To prevent the IC and external MOSFET damage when external inductor is shorted, MP3398A has the protection mode in two following methods. When inductor is shorted, the output can not maintain enough energy to load the LED and the output voltage will drop. Thus, the COMP (the error amplifier output) voltage tends to rise till be clamped high, when it lasts longer than 512 switching cycles the IC turns off and latches. In some cases that the COMP voltage can not be clamped to high when inductor is shorted, the IC also provides the protection mode by detecting the current flowing through power MOSFET. In this mode, when the current sense voltage across sense resistor (connected between MOSFET and GND) hits V_{LMT} limit value and lasts for 4 switching cycles, the IC turns off and latches.

Thermal Shutdown Protection

To prevent the IC operate at exceedingly high temperature, thermal shutdown is implemented in this chip by detecting the silicon die temperature. When the die temperature exceeds the upper threshold T_{ST}, the IC shutdowns and recovers to normal operation when die temperature drops below lower threshold. Typically, the hysteresis value is 25°C.

MPS Proprietary Information. Patent Protected. Unauthorized Photocopy and Duplication Prohibited.
© 2018 MPS. All Rights Reserved.

APPLICATION INFORMATION

Selecting the Switching Frequency

The switching frequency of the step-up converter is recommended from 100kHz to 500kHz for most of application. An oscillator resistor on OSC pin sets the internal oscillator frequency for the step-up converter according to the below equation:

$$F_{SW}(kHz) = \frac{67320}{R_{OSC}(k\Omega)}$$

For R_{OSC}=374kΩ, the switching frequency is set to 180kHz.

Setting the LED Current

The LED each string current can be set through the current setting resistor on the ISET pin.

$$I_{LED}(mA) = \frac{810 \times 1.22V}{R_{ISET} k\Omega}$$

For RSET=8.2kΩ, the LED current is set to 120mA. Please do not leave ISET pin open.

Selecting the Input Capacitor

The input capacitor reduces the surge current drawn from the input supply and the switching noise from the device. The input capacitor impedance at the switching frequency should be

less than the input source impedance to prevent the high-frequency switching current from passing through to the input. Use ceramic capacitors with X5R or X7R dielectrics for their low ESR and small temperature coefficients. For most applications, use a 4.7μF ceramic capacitor in parallel with a 220μF electrolytic capacitor.

Selecting the Inductor and Current Sensing Resistor

The MP3398A requires an inductor to supply a higher output voltage while being driven by the input voltage. A larger value inductor results in less ripple current, resulting in lower peak inductor current and reducing stress on the N-channel MOSFET. However, the larger value inductor has a larger physical size, higher series resistance, and lower saturation current.

Choose an inductor that does not saturate under the worst-case load conditions. Select the minimum inductor value to ensure that the boost converter works in continuous conduction mode with high efficiency and good EMI performance.
Calculate the required inductance value using the equation:

$$L \geq \frac{\eta \times V_{OUT} \times D \times (1-D)^2}{2 \times f_{SW} \times I_{LOAD}}$$

$$D = 1 - \frac{V_{IN}}{V_{OUT}}$$

Where V_{IN} and V_{OUT} are the input and output voltages, f_{SW} is the switching frequency, I_{LOAD} is the LED load current, and η is the efficiency.

The switching current is usually used for the peak current mode control. In order to avoid hitting the current limit, the voltage across the sensing resistor R_{SENSE} must measure less than 80% of the worst-case current-limit voltage, V_{SENSE}.

$$R_{SENSE} = \frac{0.8 \times VSENSE}{I_{L(PEAK)}}$$

$$I_{L(PEAK)} = \frac{V_{OUT} \times I_{LOAD}}{\eta V_{IN}} + \frac{V_{IN} \times (V_{OUT} - V_{IN})}{2 \times L \times F_{SW} \times V_{OUT}}$$

Where $I_{L(PEAK)}$ is the peak value of the inductor current. V_{SENSE} is shown in Figure 3.

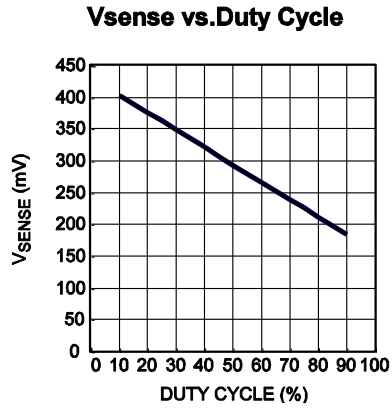

Figure 3—V_{SENSE} vs Duty Cycle

MPS Proprietary Information. Patent Protected. Unauthorized Photocopy and Duplication Prohibited.
© 2018 MPS. All Rights Reserved.

Selecting the Power MOSFET

The MP3398A is capable of driving a wide variety of N-channel power MOSFETS. The critical parameters of selection of a MOSFET are:

1. Maximum drain-to-source voltage, $V_{DS(MAX)}$
2. Maximum current, $I_{D(MAX)}$
3. On-resistance, $R_{DS(ON)}$
4. Gate source charge Q_{GS} and gate drain charge Q_{GD}
5. Total gate charge, Q_G

Ideally, the off-state voltage across the MOSFET is equal to the output voltage. Considering the voltage spike when it turns off, $V_{DS(MAX)}$ should be greater than 1.5 times of the output voltage.

The maximum current through the power MOSFET occurs at the minimum input voltage and the maximum output power. The maximum RMS current through the MOSFET is given by

$$I_{RMS(MAX)} = I_{IN(MAX)} \times \sqrt{D_{MAX}}$$, where:

$$D_{MAX} \approx \frac{V_{OUT} - V_{IN(MIN)}}{V_{OUT}}$$

The current rating of the MOSFET should be greater than $1.5xI_{RMS}$

The ON resistance of the MOSFET determines the conduction loss, which is given by:

$$P_{cond} = I_{RMS}^{2} \times R_{DS(on)} \times k$$

Where k is the temperature coefficient of the MOSFET.

The switching loss is related to Q_{GD} and Q_{GS1} which determine the commutation time. Q_{GS1} is the charge between the threshold voltage and the plateau voltage when a driver charges the gate, which can be read in the chart of V_{GS} vs. Q_G of the MOSFET datasheet. Q_{GD} is the charge during the plateau voltage. These two parameters are needed to estimate the turn-on and turn-off losses.

$$P_{SW} = \frac{Q_{GS1} \times R_G}{V_{DR} - V_{TH}} \times V_{DS} \times I_{IN} \times f_{SW} + \frac{Q_{GD} \times R_G}{V_{DR} - V_{PLT}} \times V_{DS} \times I_{IN} \times f_{SW}$$

Where V_{TH} is the threshold voltage, V_{PLT} is the plateau voltage, R_G is the gate resistance, and

V_{DS} is the drain-source voltage. Please note that calculating the switching loss is the most difficult part in the loss estimation. The formula above provides a simplified equation. For more accurate estimates, the equation becomes much more complex.

The total gate charge, Q_G, is used to calculate the gate drive loss. The expression is

$$P_{DR} = Q_G \times V_{DR} \times f_{SW}$$

Where V_{DR} is the drive voltage.

Selecting the Output Capacitor

The output capacitor keeps the output voltage ripple small and ensures feedback loop stability. The output capacitor impedance must be low at the switching frequency. Ceramic capacitors with X7R dielectrics are recommended for their low ESR characteristics. For most applications, a 4.7μF ceramic capacitor in parallel with a 22μF electrolytic capacitor will suffice.

Setting the Over Voltage Protection

The open string protection is achieved through the detection of the voltage on the OVP pin. In some cases, an LED string failure results in the feedback voltage always zero. The part then keeps boosting the output voltage higher and higher. If the output voltage reaches the programmed OVP threshold, the protection will be triggered.

To ensure the chip functions properly, select the resistor values for the OVP resistor divider to provide an appropriate set voltage. The recommended OVP point is about 1.1 to 1.2 times higher than the output voltage for normal operation.

$$V_{OVP} = 1.23 \times (1 + \frac{R_{HIGH}}{R_{LOW}})$$

Selecting Dimming Control Mode

The MP3398A provides two different dimming methods.

1. Direct PWM Dimming

An external PWM dimming signal is employed to achieve PWM dimming control. Apply a PWM dimming signal (in the range of 100Hz to 20kHz) to the PWM pin. The minimum recommended

MPS Proprietary Information. Patent Protected. Unauthorized Photocopy and Duplication Prohibited.
© 2018 MPS. All Rights Reserved.

amplitude of the PWM signal is 1.5V and the low level should be less than 0.4V.

Table 1—The Range of PWM Dimming Duty

f_{PWM}(Hz)	D_{min}	D_{max}
100<f≤200	0.30%	100%
200<f≤500	0.75%	100%
500<f≤1k	1.50%	100%
1k<f≤2k	3.00%	100%
2k<f≤5k	7.50%	100%
5k<f≤10k	15.00%	100%
10k<f≤20k	30.00%	100%

2. Analog Dimming

For analog dimming, apply a PWM signal or a DC voltage signal to ADIM pin. An internal RC filter (10Mohm resistor and 100pF capacitor) is integrated to this pin. So, if a PWM signal applied to this pin, >20kHz frequency is recommended to get a better PWM signal filtering performance and make sure the amplitude voltage is higher than 1.5V and low level voltage is less than 0.4V with >15mV/ns slope rate for falling/rising edge. For DC signal input, please apply a DC input signal range from 0.4V to 1.5V to linearly set the LED current from 0% to 100%.

Expanding LED Channels

The MP3398A can expand the number of LED channels by using two or three MP3398A in parallel. To connect two MP3398A for a total of 8 LED strings, tie the VCC pins of the master IC and the slave IC together to power the slave IC internal logic circuitry. Tie the COMP pins of the slave IC and the master IC together to regulate the voltage of all 8 strings LEDs. The slave IC MOSFET driving signals are not used; the boost converter can be only driven by the master IC. Do not leave the I_{SENSE} pin of the slave IC floating; tie it to ground. Apply the EN and DIM signals to both ICs.

Layout Considerations

The circuit layout for the MP3398A requires special attention to reduce EMI noise.

The loop from the external MOSFET (M1), through the output diode (D1) and the output capacitor (C2, C3) carry a high-frequency pulse current and must be as small and short as possible (See Figure 4).

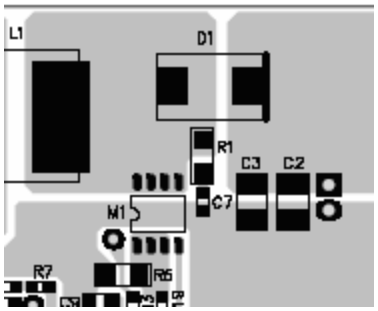

Figure 4—Layout Consideration

All logic signals refer to the signal ground. in order to reduce the noise affection, it is recommend to separate the power ground(PGND) and signal ground(GND), then connect PGND and GND together.

MPS Proprietary Information. Patent Protected. Unauthorized Photocopy and Duplication Prohibited.
© 2018 MPS. All Rights Reserved.

TYPICAL APPLICATION CIRCUITS

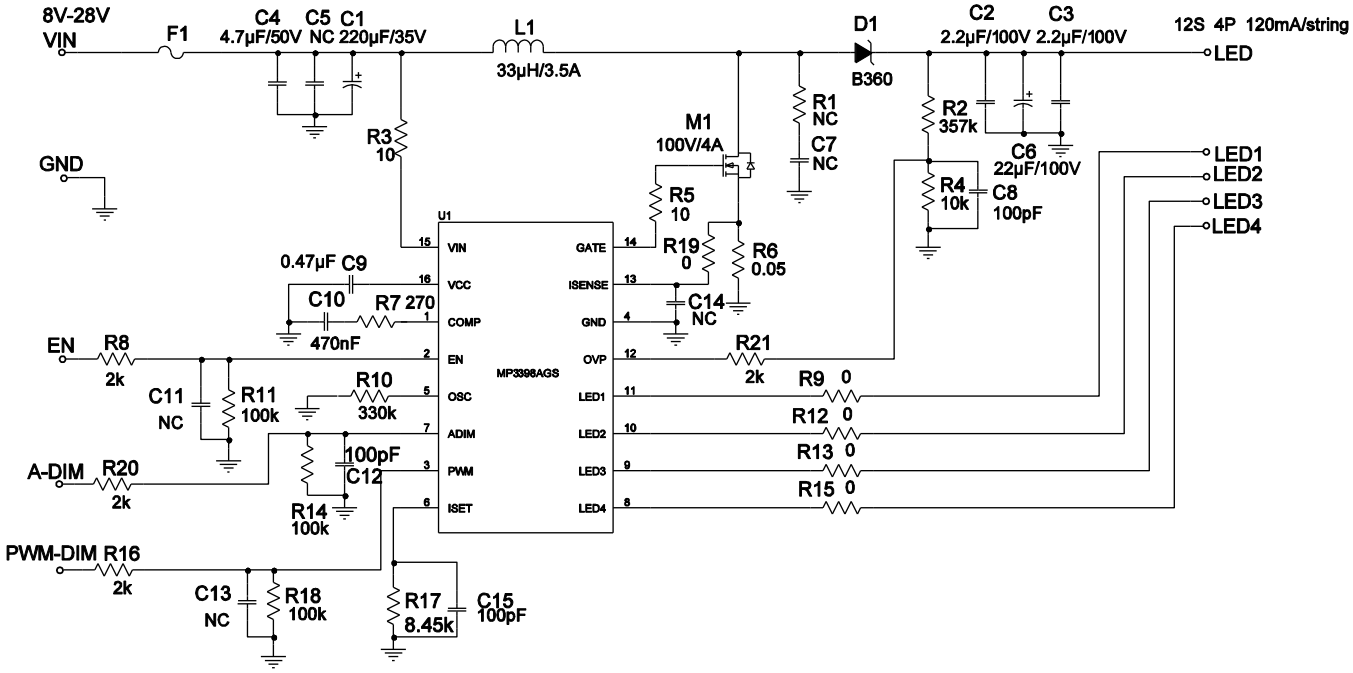

Figure 5: 4 string, 12 LED in series, 120mA/string application

(Some components are reasonably adjustable based on real case)

MPS Proprietary Information. Patent Protected. Unauthorized Photocopy and Duplication Prohibited.
© 2018 MPS. All Rights Reserved.

PACKAGE INFORMATION

SOIC16

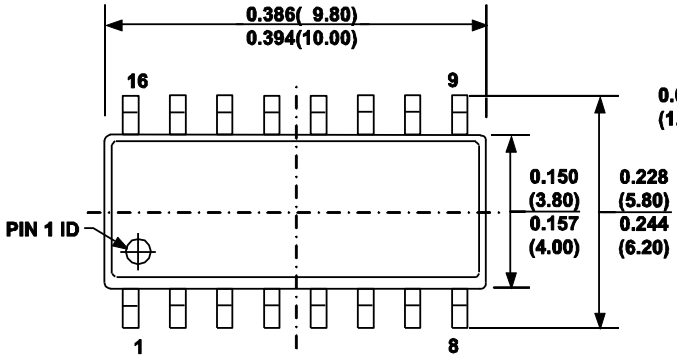

TOP VIEW

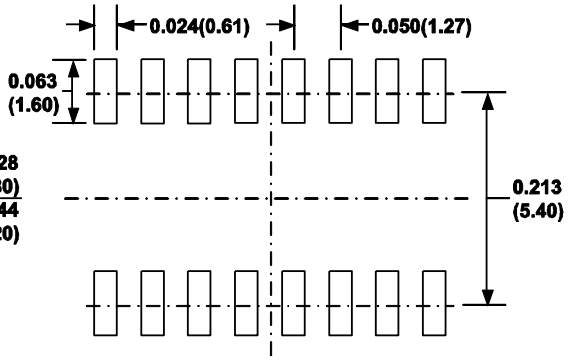

RECOMMENDED LAND PATTERN

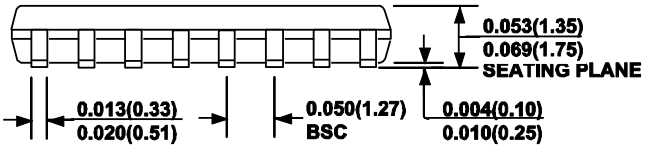

FRONT VIEW

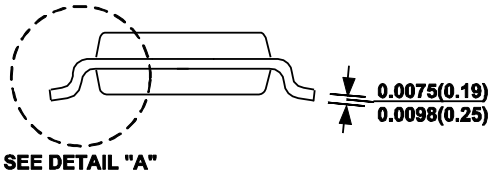

SIDE VIEW

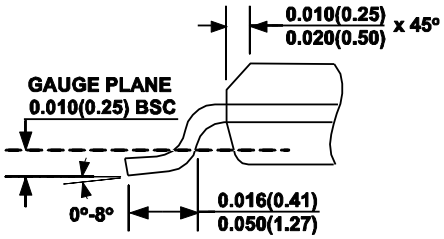

DETAIL "A"

NOTE:

1) CONTROL DIMENSION IS IN INCHES. DIMENSION IN BRACKET IS IN MILLIMETERS.
2) PACKAGE LENGTH DOES NOT INCLUDE MOLD FLASH, PROTRUSIONS OR GATE BURRS.
3) PACKAGE WIDTH DOES NOT INCLUDE INTERLEAD FLASH OR PROTRUSIONS.
4) LEAD COPLANARITY (BOTTOM OF LEADS AFTER FORMING) SHALL BE 0.004" INCHES MAX.
5) DRAWING CONFORMS TO JEDEC MS-012, VARIATION AC.
6) DRAWING IS NOT TO SCALE.

MPS Proprietary Information. Patent Protected. Unauthorized Photocopy and Duplication Prohibited.
© 2018 MPS. All Rights Reserved.

TSSOP16-EP（with external thermal pad）

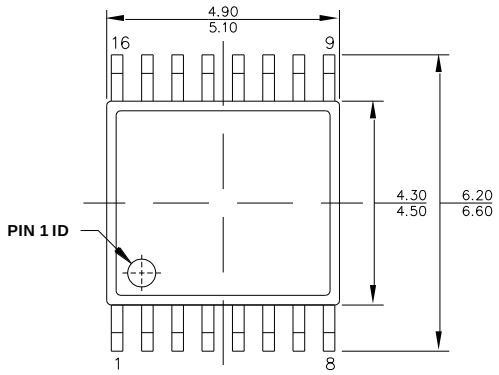

TOP VIEW

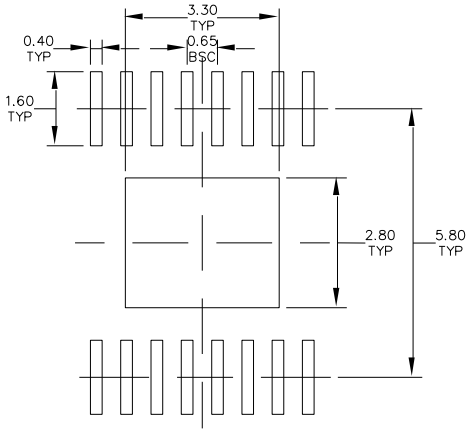

RECOMMENDED LAND PATTERN

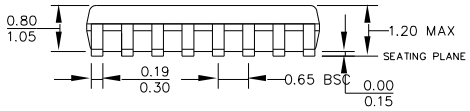

FRONT VIEW

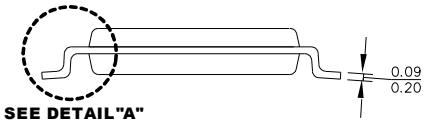

SIDE VIEW

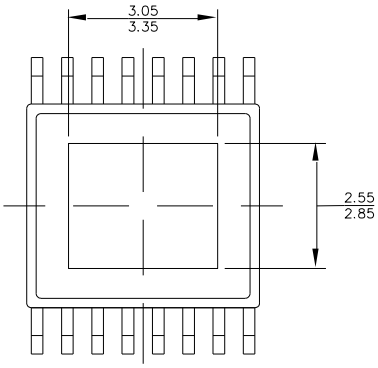

BOTTOM VIEW

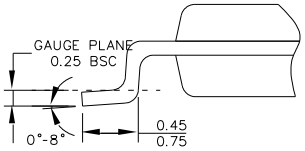

DETAIL "A"

NOTE:

1) ALL DIMENSIONS ARE IN MILLIMETERS.
2) PACKAGE LENGTH DOES NOT INCLUDE MOLD FLASH, PROTRUSION OR GATE BURR.
3) PACKAGE WITDH DOES NOT INCLUDE INTERLEAD FLASH OR PROTRUSION.
4) LEAD COPLANARITY (BOTTOM OF LEADS AFTER FORMING) SHALL BE 0.10 MILLIMETERS MAX.
5) DRAWING CONFORMS TO JEDEC MO-153, VARIATION ABT.
6) DRAWING IS NOT TO SCALE.

MPS Proprietary Information. Patent Protected. Unauthorized Photocopy and Duplication Prohibited.
© 2018 MPS. All Rights Reserved.

SOIC20

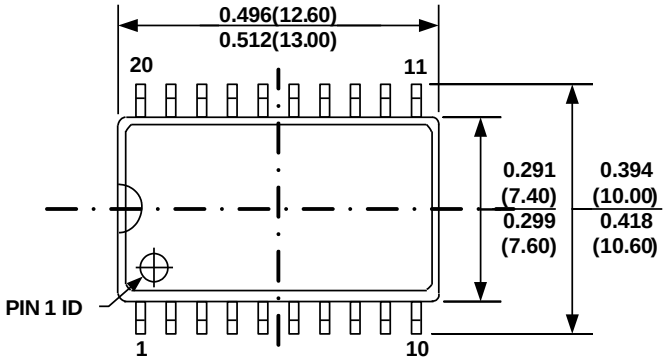

TOP VIEW

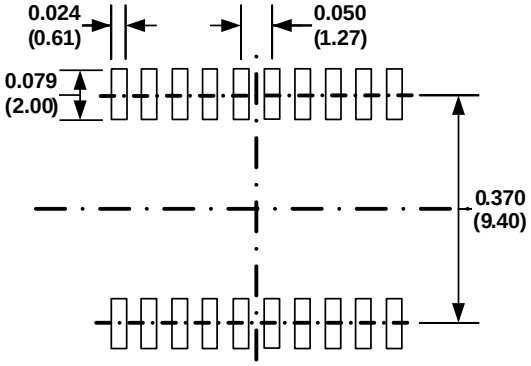

RECOMMENDED LAND PATTERN

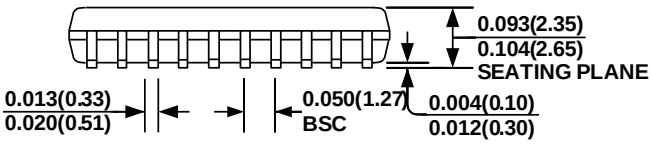

FRONT VIEW

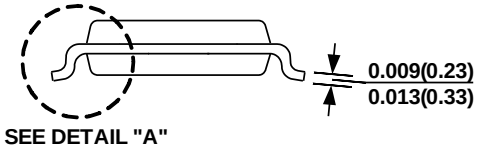

SIDE VIEW

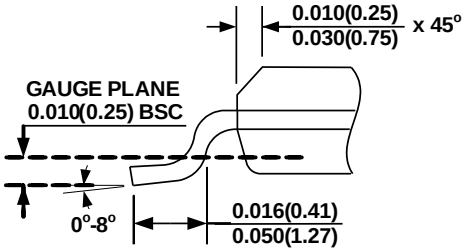

DETAIL "A"

NOTE:

1) CONTROL DIMENSION IS IN INCHES. DIMENSION IN BRACKET IS IN MILLIMETERS
2) PACKAGE LENGTH DOES NOT INCLUDE MOLD FLASH, PROTRUSIONS OR GATE BURRS
3) PACKAGE WIDTH DOES NOT INCLUDE INTERLEAD FLASH OR PROTRUSIONS.
4) LEAD COPLANARITY(BOTTOM OF LEADS AFTER FORMING) SHALL BE 0.10 MILLIMETERS MAX.
5) DRAWING CONFORMS TO JEDEC MS-013, VARIATION AC.
6) DRAWING IS NOT TO SCALE.

NOTICE: The information in this document is subject to change without notice. Please contact MPS for current specifications. Users should warrant and guarantee that third party Intellectual Property rights are not infringed upon when integrating MPS products into any application. MPS will not assume any legal responsibility for any said applications.

© 2018 MPS. All Rights Reserved.