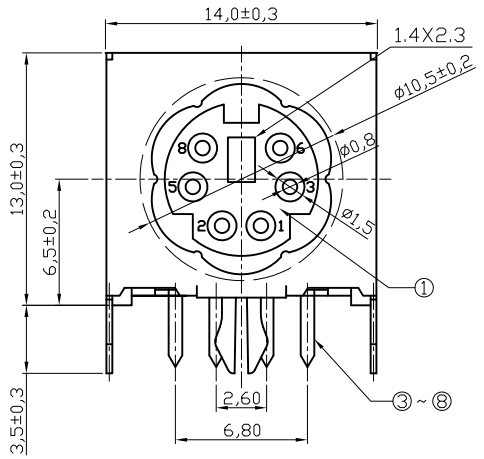

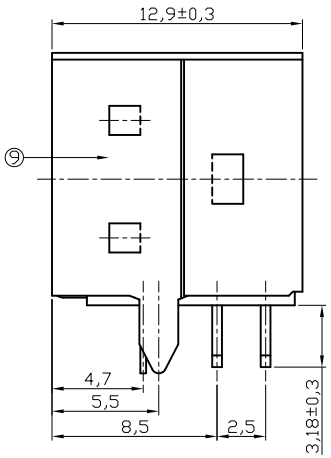

Rated voltage
12V DC
Rated current
2A
Withstand voltage
500V AC rms / 60Hz
Insulation resistance
100MOhm min.
Contact resisance
100mOhm max.
Operating temperature
-25°C to +85°C

*TOLERANCE:
±0.2 FOR ALL OTHERs

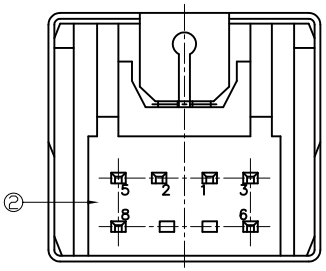

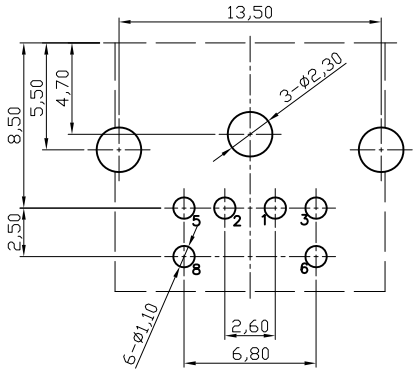

Recommended PCB Layout
[BOTTOM VIEW]

ITEM	DESCRIPTIONS	MATERIAL	FINISH	Q'TY	NOTE
⑨	5-SIDE SHIELD	BRASS	TIN	1	
⑧	CONTACT #8	PBS	Au+Tin	1	
⑦	CONTACT #6	PBS	Au+Tin	1	
⑥	CONTACT #5	PBS	Au+Tin	1	
⑤	CONTACT #3	PBS	Au+Tin	1	
④	CONTACT #2	PBS	Au+Tin	1	
③	CONTACT #1	PBS	Au+Tin	1	
②	SPACER	PBT	BLACK	1	UL94V-0
①	HOUSING	PBT	BLACK	1	UL94V-0

RoHS compliant

Scale	1:1
TOLERANCE	
X.X	±X
X.XX	±X
X.XXX	±X
DIM	TOL
X.°	±X°
X.X°	±X°
Angle	TOL

Id.	Modification	Date	Name
②	Update	15.07.2009	Rale
①	Drawn	06.12.2004	Hellwig

	Date	Name
Drawn	06.12.2004	Hellwig
Approved	15.07.2009	Hellwig

ASSMANN WSW components

Customer-No.

ASSMANN WSW-No.
A-DIO-FS06

Drawing-No.
ASS 1021 CO

rev02

Replace

Sheet