VRISHAL ENGINEERING PRIVATE LIMITED

WELD BOOK - STEEL STRUCTURE

CLIENT : AARTI INDUSTRIES LTD, JHAGADIA, ZONE-4

PROJECT : CORAL-2

PO : 4580584722 Dt.26.02.2025

DOCUMENT NO : VEPL/AIL-J/CORAL-2/WB-002

0	03.04.2025	ISSUED FOR REVIEW & APPROVAL	SHIVANG DIWAKAR	HARDIK PRAJAPATI	HARDIK SANDHIYA
REV	DATE	DESCRIPTION (ISSUE PURPOSE)	PREP'D BY / VEPL	REV'D BY / VEPL	APR'D BY / AIL

Vrishal Engineering Private Limited QA/QC

VRISHAL ENGINEERING PRIVATE LIMITED

WELDING MAP FOR STRUCTURAL FABRICATION

CLIENT: AARTI INDUSTRIES LTD, JHAGADIA, ZONE-4

PROJECT :- CORAL-2

SR.NR.	WPS NO.	REV.NO.	SUPPORTING PQR	MATERIAL	PROCESS-1	PROCESS-2	THICKNESS RANGE	PWHT YES - NO	FILLER METAL	POSITION	WELDING CONSUMABLE BRAND
1	VEPL/WPS/005	1	VEPL/PQR/005	IS 2062 E350 GR.C or IS 2062 E250 GR.BO/BR/A or Equivalent	SMAW	NA	1) Groove : 3 mm - Unlimited 2) Fillet : Any	NO	E - 7018	ALL	D&H, ESAB, ADOR
2	VEPL/WPS/006	1	VEPL/PQR/006	IS 2062 E350 GR.C or IS 2062 E250 GR.BO/BR/A or Equivalent	FCAW	NA	1) Groove : 3 mm - Unlimited 2) Fillet : Any	NO	E71T-1C	ALL	D&H, ESAB, ADOR , HYUNDAI

Vrishal Engineering Private Limited QA/QC

VISHAL ENTERPRISE & VRISHAL ENGINEERING PVT.LTD. GROUP OF COMPANIES

WELDING PROCEDURE SPECIFICATION

(As per AWS D1.1)

WELDING PROCEDURE SPEC. NO. : VEPL/WPS/005	**REV NO. 01**	**DATE : 23.12.2024**
SUPPORTING PQR NO.: VEPL/PQR/005	**REV NO. 00**	**DATE : 08.09.2022**
WELDING PROCESS: SMAW	**TYPE: MANUAL**	

JOINT DESIGN	
GROOVE DESIGN	***AS PER APPROVED AFC DRAWING (For PQR : Single V)***
BACKING	NO FOR ROOT / YES FOR REST
BACKING MATERIAL	BASE / WELD METAL
ROOT SPACING	3 - 4 mm
ROOT FACE	1-2 mm
GROOVE ANGLE	***AS PER APPROVED DRAWING / WELD BOOK***
BASE METALS	
MATERIAL SPEC. & GROUP	IS2062 E350 Gr.BR/C or IS2062 E250 Gr.BR/B0/A or Equivalent
TEST PLATE THICKNESS	25 mm
QUALIFIED THICKNESS	3 mm to Unlimited
FILLET	Any

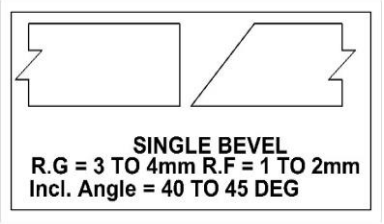

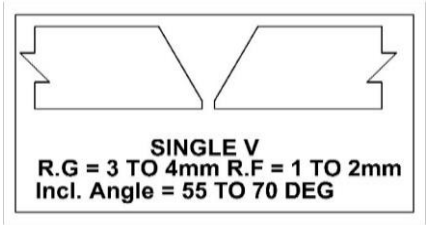

NOTE: WELD DESIGN WILL BE CONSIDERED AS PER THE APPROVED DRAWINGS ONLY.

FILLER METALS	
AWS SPECIFICATIONS	SMAW:SFA 5.1
AWS CLASSFICATION	E 7018

POSITION	
PQR TEST PLATE POSITION	2G,3G & 4G
QUALIFIED POSITION FOR GROOVE	ALL
VERTICAL PROGRESSION	UPHILL

POST WELD HEAT TREATMENT
NA

SHIELDING GAS	
TYPE OF GAS	NA
COMPOSITION	NA
FLOW RATE (LPM)	NA
GAS CUP SIZE	NA

ELECTRICAL CHARACTERISTICS	
TRANSFER MODE(GMAW)	NA
SHORT CIRCUITING	NA
CURRENT	DC
POLARITY	DCEP
OTHER	NA

PREHEAT/INTERPASS TEMPERATURE (As per table 5.8 of AWS D1.1)			**PREHEAT METHOD**
THICKNESS	≤ 38	>38 to 65	PREHEAT SHALL BE CHECKED AT A DISTANCE OF 3" OR 3 TIMES THE THICKNESS WHICHEVER IS GREATER FROM THE WELD TOE AND THROUGH THE THICKNESS
PREHEAT TEMPERATURE	10°C	65°C	
INTERPASS TEMPERATURE, Max.	**250°C**		

TECHNIQUE	
STRING OR WEAVE BEAD	STRING / WEAVING
MULTIPASS OR SINGLE PASS	MULTIPASS
NUMBER OF ELECTRODE	SIGNLE
CONTACT TUBE TO WORK DISTANCE	NA
PEENING	NA
INTERPASS CLEANING	GRIND / WIRE BRUSHING
TACK WELD TECHNIQUE	NA
TACK LENGTH	REFER NOTE 1

PASS OR WELD LAYER	WELDING PROCESS	FILLER METALS		CURRENT		VOLTS (V)	ELECTRODE RUNOUT LENGTH MINIMUM (mm)	TRAVEL SPEED mm/min (Min.)	HEAT INPUT kJ / mm (Max.)
		CLASS	DIA. mm	TYPE OF POLARITY	AMPS				
ROOT PASS / BACK CHIP	SMAW	E 7018	2.5 / 3.15	DCEP	70-120	21-27	50	71-130	2.5
HOT PASS	SMAW	E 7018	2.5 / 3.15	DCEP	70-120	21-26	50	71-130	2.5
FILL UP	SMAW	E 7018	3.15 / 4.0	DCEP	90-170	22-28	50	100-150	2.5
CAPPING	SMAW	E 7018	3.15 / 4.0	DCEP	90-170	22-28	50	100-150	2.5

NOTE :
1) 50 mm OR 4 times the thickness whichever is less, with a min. throat size of 6mm - 2 Pass maximum
2) Pre-heating shall be strictly followed for tacking also
3) Weaving should not exceed 2.5 times of electrode

	PREPARED BY	APPROVED BY
NAME	SHIVANG DIWAKAR	HARDIK PRAJAPATI
SIGNATURE		
DATE	23.12.2024	23.12.2024

PROCEDURE QUALIFICATION RECORD (PQR)

Organization Name : VISHAL ENTERPRISE AND VRISHAL ENGINEERING PVT. LTD. GROUP OF COMPANIES

Procedure Qualification Record No : VEPL/PQR/005 Rev.0 | Date : 08.09.2022

PWPS No : VEPL/PWPS/005 REV.02

Welding Process (es) : SMAW

Types (Manual, Automatic, Semi Automatic) : MANUAL

Joints

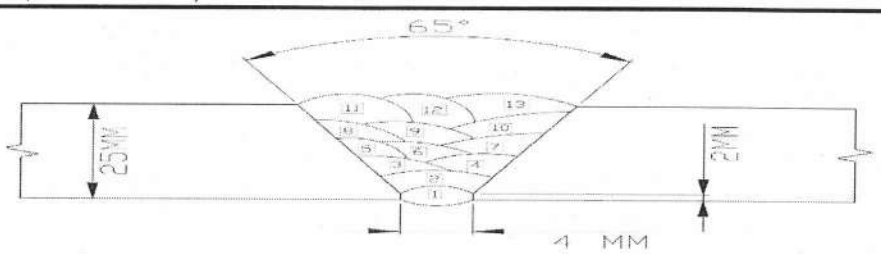

Base Metals	
Material Spec.	IS 2062
Types of Grades, or UNS number	E350 GR.C
Thickness of Test coupon	25 mm
Size of Test Coupo	500 mm X 300 mm
Others	None

Preheat	
Preheat Temp.	25°C
Interpass Temp.	222°C Max.
Post Heating Temp.	NA

Post Weld Heat Treatment	
Temperature	NA
Time	NA

Filler Metals	
Welding Process	SMAW
SFA Specification	SFA 5.1
AWS classification	E 7018
Filler Metal F No.	4
Weld Metal Analysis A No.	1
Size Of Consumable	2.5 / 3.15 / 4.00 mm
Filler Metal Product form	Flux Covered
With and without Filler metal	Without
Supplemental Filler Metal	NA
Electrode flux classification	-
Flux Type	-
Flux Trade name	-
Weld Metal Thickness	28 mm
Others	-

GAS	Gas (es)	(Mixture)	Flow Rate
Shielding	None	None	None
Trailing	None	None	None
Back / Purging	None	None	None
Others	None	None	None

Electrial Characteristics	
	SMAW
Current :	Direct
Polarity:	DCEP
Amps :	As per Running Sheet
Tungsten electrode Size :	-
Heat Input	As per Running Sheet

Position	
Position for Groove	2G , 3G & 4G
Weld Progression	Uphill
Others	None

Technique	
Travel Speed	As per Running Sheet
String or Weave bead	Weave
Method of cleaning	Wire Brusing / Buffing / Chipping
Oscillation	NA
Method of Back Gouging	NA
Multipass or Single pass	Multiple
Single or Multiple Electrodes	Single

	VISHAL	CLEINT / TPIA
SIGN		REVIEWED / ~~NOTED~~ ✓ .....%WITNESSED
NAME	QA/QC	
DATE	08.09.2022	08/09/2022

VISHAL ENTERPRISE

VINAY DESHMUKH

PROCEDURE QUALIFICATION RECORD (PQR)

Organization Name : VISHAL ENTERPRISE AND VRISHAL ENGINEERING PVT. LTD. GROUP OF COMPANIES

Procedure Qualification Record No : VEPL/PQR/005 Rev.0 | Date : 08.09.2022

PWPS No : VEPL/PWPS/005 REV.02

Welding Process (es) : SMAW

Types (Manual, Automatic, Semi Automatic) : MANUAL

Tensile test - AWS D1.1 2020 for 2G Position (TC No. E2821)

SR. No.	Width (mm)	Thickness (mm)	Area (mm2)	Ultimate Total Load (N)	Ultimate Unit Stress (Mpa)	Broken From	Fracture
E2821ts1	20.20	24.82	501.36	288522	575.47	Parent	Ductile
E2821ts2	20.27	24.96	505.93	290730	574.63	Parent	Ductile

Tensile test - AWS D1.1 2020 for 3G Position (TC No. E2822)

SR. No.	Width (mm)	Thickness (mm)	Area (mm2)	Ultimate Total Load (N)	Ultimate Unit Stress (Mpa)	Broken From	Fracture
E2822ts1	20.68	24.92	515.34	288438	559.69	Parent	Ductile
E2822ts2	20.08	24.81	498.18	283566	569.19	Parent	Ductile

Tensile test - AWS D1.1 2020 for 4G Position (TC No. E2823)

SR. No.	Width (mm)	Thickness (mm)	Area (mm2)	Ultimate Total Load (N)	Ultimate Unit Stress (Mpa)	Broken From	Fracture
E2823ts1	20.23	25.06	506.96	290250	572.52	Parent	Ductile
E2823ts2	20.21	25.00	505.25	291858	577.65	Parent	Ductile

Bend test E2821be - AWS D1.1 2020 for 2G Position (TC No. E2821)

SR. No.	Sample Thickness (mm)	Mandrel Dia. (mm)	Angle of Bend (degree)	Observation
Side bend 1	10	38	180	Found Satisfactory
Side bend 2	10	38	180	Found Satisfactory
Side bend 3	10	38	180	Found Satisfactory
Side bend 4	10	38	180	Found Satisfactory

Bend test E2822be - AWS D1.1 2020 for 3G Position (TC No. E2822)

SR. No.	Sample Thickness (mm)	Mandrel Dia. (mm)	Angle of Bend (degree)	Observation
Side bend 1	10	38	180	Found Satisfactory
Side bend 2	10	38	180	Found Satisfactory
Side bend 3	10	38	180	Found Satisfactory
Side bend 4	10	38	180	Found Satisfactory

Bend test E2823be - AWS D1.1 2020 for 4G Position (TC No. E2823)

SR. No.	Sample Thickness (mm)	Mandrel Dia. (mm)	Angle of Bend (degree)	Observation
Side bend 1	10	38	180	Found Satisfactory
Side bend 2	10	38	180	Found Satisfactory
Side bend 3	10	38	180	Found Satisfactory
Side bend 4	10	38	180	Found Satisfactory

	VISHAL	CLEINT / TPIA
SIGN		REVIEWED / NOTED / %WITNESSED
NAME	Haven	VINAY DESHMUKH
DATE	08.09.2022	08/09/2022

VISHAL ENTERPRISE QA/QC

PROCEDURE QUALIFICATION RECORD (PQR)

Organization Name : VISHAL ENTERPRISE AND VRISHAL ENGINEERING PVT. LTD. GROUP OF COMPANIES

Procedure Qualification Record No : VEPL/PQR/005 Rev.0 | Date : 08.09.2022

PWPS No : VEPL/PWPS/005 REV.02

Welding Process (es) : SMAW

Types (Manual, Automatic, Semi Automatic) : MANUAL

All Weld Tensile Test - AWS D1.1 2020

Identification	2G Position (TC No. E2821ts3)	3G Position (TC No. E2822ts3)	4G Position (TC No. E2823ts3)
SR.NO	E2821ts3	E2822ts3	E2823ts3
Width (mm)	12.55	12.50	12.51
Area (mm2)	123.7	122.72	122.92
0.2% Proof Load (N)	63319	64747	63475
0.2% Proof Stress (Mpa)	511.87	527.60	516.39
Ultimate Load (N)	71040	74004	72162
Ultimate Tensile Strength (Mpa)	574.29	603.03	587.08
Guage Length (mm)	50.00	50.00	50.00
Final Guage Length (mm)	62.41	62.76	61.7
Elongation (%)	24.82	25.52	23.40
Sample Broken From	WGL	WGL	WGL

Macro-Etch

TC No.	Removal Location	Observation	Test Result	
			Accept	Reject
E2821ma	Cross Section of Weld	Complete Fusion and Free from Crack	X	-
E2822ma	Cross Section of Weld	Complete Fusion and Free from Crack	X	-
E2823ma	Cross Section of Weld	Complete Fusion and Free from Crack	X	-

Other Test

Type	Required By		Test Result		TC No.
	CODE	Test Method	Accept	Reject	
Hardness @ HV10	AWS D1.1	ASTM E92-17	X	-	E2821ha , E2822ha & E2823ha
Charpy Impact @ -20°C	AWS D1.1	ASTM A370-21	X	-	E2821cv , E2822cv & E2823cv

Welder's Name :	ASWINI KUMAR	WELDER NO	S-AB13
Test Conducted By	GLOBAL METALLURGICAL SERVICES		
Test Witnessed By	TUV NORD		
Radiography Test Report No.	VE/ITT/RT/PQR/01		
Tensile & Bend test Report No.	E2821 , E2822 & E2823		
All Weld Tensile Test Report No.	E2821ts3 , E2822ts3 & E2823ts3		
Macro Examination Report No.	E2821ma , E2822ma & E2823ma		
Hardness Test Report No.	E2821ha , E2822ha & E2823ha		
Impact Test Report No.	E2821cv , E2822cv & E2823cv		
Visual Examination Report No.	VE/ITT/PQR/WV/01		

We certify that the statements in this record are correct and that the test welds were prepared, welded, tested in accordance with the requirements of AWS D1.1:2020 and Project Specification

Organization: Vishal Enterprise
By Hardik Prajapati
Date : 08.09.2022

	VISHAL	CLEINT / TPIA
SIGN		REVIEWED / NOTE ..... % WITNESSED
NAME	Hardik K	
DATE	08.09.2022	08/09/2022 VINAY DESHMUKH

Test Report

Name & Add. Of Customer	VISHAL ENTERPRISE D-2/E, 397-398, DAHEJ G.I.D.C, JOLWA, BHARUCH – 392 130.	**TC No.:** E2821 **ULR No.:** TC836222000005287F **Date of Issue:** 08.09.2022
Type of Test	Tensile Test/ Bend Test	**Page:** 1 of 1
Instrument Utilised	GMS-TM-03	**Location:** At Laboratory
Customer Ref.	Delivery Challan and Packing List: VE/2154, Date: 31.08.2022	
Sample received on	01.09.2022	
Nature of sample	Welded Plate Sample	**Condition of sample:** Satisfactory
Sample Size(mm)	500 mm X 300 mm X 25 mm Thk	**Sample Drawn by:** Party, Stamped by "TUV INDIA"
Specification	IS 2062 GRADE E350 QUALITY C	**Test Completed on:** 07.09.2022
Sample ID	Project Name: EN202775 LA PORTE HYCO4, Client Name: ITT Engineering India Pvt. Ltd., Identification – VEPL/PQR/005-2G	

Results

Discipline – Mechanical Testing

Group – Ferrous material & its Alloys

Tensile Test – E2821ts			Test Method – AWS D1.1: 2020										
Sr. No. / Location		Width (mm)	Thickness (mm)	Cross Section Area (mm^2)	Yield Load (N)	Yield Strength (MPa)	Ultimate Load (N)	Ultimate Tensile Strength (MPa)	Gauge Length (mm)	Final Gauge Length (mm)	Elongation (%)	Reduction on Dia. (mm)	Reduction of Area (%)
--	Req.	--	--	--	--	--	--	490 Min	--	--	--	--	--
--	U of M (±)	--	--	--	--	--	--	5.02	--	--	--	--	--
E2821ts1	Obs.	20.20	24.82	501.36	--	--	288522	575.47	--	--	--	--	--
E2821ts2	Obs.	20.27	24.96	505.93	--	--	290730	574.63	--	--	--	--	--
Sample Broken From – Parent (Ductile Fracture)													

Bend Test – E2821be	Test Method – AWS D1.1: 2020			
Sr. No.	Side Bend 1	Side Bend 2	Side Bend 3	Side Bend 4
Sample Thickness (mm)	10	10	10	10
Mandrel Dia. (mm)	38	38	38	38
Angle of bend (degree)	180	180	180	180
Observation	Found Satisfactory	Found Satisfactory	Found Satisfactory	Found Satisfactory

VISHAL ENTERPRISE QA/QC

Remarks – The Offered Sample complying Requirement of AWS D1.1: 2020 based on Reported Results ± U.O.M Within Permissible Limits.

Tested By	**Reviewed & Authorized Signatory** **Amit Meghani**	**Witnessed By**

GLOBAL METALLURGICAL SERVICES VADODARA

Technical Inspection Services TUV 450 08/09/2022

- The Sample was not drawn by Laboratory.
- The above test reports relate only to sample submitted / tested.
- Test Reports Shall not be reproduced except in full, without written permission of laboratory.

Form – 20 R. 03

End of Test Report

Test Report

Name & Add. Of Customer	VISHAL ENTERPRISE D-2/E, 397-398, DAHEJ G.I.D.C, JOLWA, BHARUCH – 392 130.	**TC No.:** E2822 **ULR No.:** TC836222000005288F **Date of Issue:** 08.09.2022
Type of Test	Tensile Test/ Bend Test	**Page:** 1 of 1
Instrument Utilised	GMS-TM-03	**Location:** At Laboratory
Customer Ref.	Delivery Challan and Packing List: VE/2154, Date: 31.08.2022	
Sample received on	01.09.2022	
Nature of sample	Welded Plate Sample	**Condition of sample:** Satisfactory
Sample Size(mm)	500 mm X 300 mm X 25 mm Thk	**Sample Drawn by:** Party, Stamped by "TUV INDIA"
Specification	IS 2062 GRADE E350 QUALITY C	**Test Completed on:** 07.09.2022
Sample ID	Project Name: EN202775 LA PORTE HYCO4, Client Name: ITT Engineering India Pvt. Ltd., Identification – VEPL/PQR/005-3G	

Results

Discipline – Mechanical Testing

Group – Ferrous material & its Alloys

Tensile Test – E2822ts | Test Method – AWS D1.1: 2020

Sr. No. / Location		Width (mm)	Thickness (mm)	Cross Section Area (mm²)	Yield Load (N)	Yield Strength (MPa)	Ultimate Load (N)	Ultimate Tensile Strength (MPa)	Gauge Length (mm)	Final Gauge Length (mm)	Elongation (%)	Reduction Dia. (mm)	Reduction of Area (%)
--	Req.	--	--	--	--	--	--	490 Min	--	--	--	--	--
--	U of M (±)	--	--	--	--	--	--	5.02	--	--	--	--	--
E2822ts1	Obs.	20.68	24.92	515.34	--	--	288438	559.69	--	--	--	--	--
E2822ts2	Obs.	20.08	24.81	498.18	--	--	283566	569.19	--	--	--	--	--

Sample Broken From – Parent (Ductile Fracture)

Bend Test – E2822be | Test Method – AWS D1.1: 2020

Sr. No.	Side Bend 1	Side Bend 2	Side Bend 3	Side Bend 4
Sample Thickness (mm)	10	10	10	10
Mandrel Dia. (mm)	38	38	38	38
Angle of bend (degree)	180	180	180	180
Observation	Found Satisfactory	Found Satisfactory	Found Satisfactory	Found Satisfactory

Remarks – The Offered Sample complying Requirement of AWS D1.1: 2020 based on Reported Results ± U.O.M Within Permissible Limits.

Tested By	**Reviewed & Authorized Signatory** **Amit Meghani**	**Witnessed By**

- The Sample was not drawn by Laboratory.
- The above test reports relate only to sample submitted / tested.
- Test Reports Shall not be reproduced except in full, without written permission of laboratory.

Form – 20 R. 03

End of Test Report

Test Report

Name & Add. Of Customer	VISHAL ENTERPRISE D-2/E, 397-398, DAHEJ G.I.D.C, JOLWA, BHARUCH – 392 130.	**TC No.:** E2823 **ULR No.:** TC836222000005289F **Date of Issue:** 08.09.2022
Type of Test	Tensile Test/ Bend Test	**Page:** 1 of 1
Instrument Utilised	GMS-TM-03	**Location:** At Laboratory
Customer Ref.	Delivery Challan and Packing List: VE/2154, Date: 31.08.2022	
Sample received on	01.09.2022	
Nature of sample	Welded Plate Sample	**Condition of sample:** Satisfactory
Sample Size(mm)	500 mm X 300 mm X 25 mm Thk	**Sample Drawn by:** Party, Stamped by "TUV INDIA"
Specification	IS 2062 GRADE E350 QUALITY C	**Test Completed on:** 07.09.2022
Sample ID	Project Name: EN202775 LA PORTE HYCO4, Client Name: ITT Engineering India Pvt. Ltd., Identification – VEPL/PQR/005-4G	

Results

Discipline – Mechanical Testing

Group – Ferrous material & its Alloys

Tensile Test – E2823ts			Test Method – AWS D1.1: 2020										
Sr. No. / Location		Width (mm)	Thickness (mm)	Cross Section Area (mm²)	Yield Load (N)	Yield Strength (MPa)	Ultimate Load (N)	Ultimate Tensile Strength (MPa)	Gauge Length (mm)	Final Gauge Length (mm)	Elongation (%)	Reduction Dia. (mm)	Reduction of Area (%)
--	Req.	--	--	--	--	--	--	490 Min	--	--	--	--	--
--	U of M (±)	--	--	--	--	--	--	5.02	--	--	--	--	--
E2823ts1	Obs.	20.23	25.06	506.96	--	--	290250	572.52	--	--	--	--	--
E2823ts2	Obs.	20.21	25.00	505.25	--	--	291858	577.65	--	--	--	--	--

Sample Broken From – Parent (Ductile Fracture)

Bend Test – E2823be	Test Method – AWS D1.1: 2020			
Sr. No.	Side Bend 1	Side Bend 2	Side Bend 3	Side Bend 4
Sample Thickness (mm)	10	10	10	10
Mandrel Dia. (mm)	38	38	38	38
Angle of bend (degree)	180	180	180	180
Observation	Found Satisfactory	Found Satisfactory	Found Satisfactory	Found Satisfactory

Remarks – The Offered Sample complying Requirement of AWS D1.1: 2020 based on Reported Results ± U.O.M Within Permissible Limits.

Tested By	Reviewed & Authorized Signatory Amit Meghani	Witnessed By

- The Sample was not drawn by Laboratory.
- The above test reports relate only to sample submitted / tested.
- Test Reports Shall not be reproduced except in full, without written permission of laboratory.

Form – 20 R. 03

End of Test Report

Test Report

Name & Add. Of Customer	VISHAL ENTERPRISE D-2/E, 397-398, DAHEJ G.I.D.C, JOLWA, BHARUCH – 392 130.	**TC No.:** E2821ts3 **ULR No.:** TC836222000005299F **Date of Issue:** 08.09.2022
Type of Test	Tensile Test	**Page:** 1 of 1
Instrument Utilised	GMS-TM-03	**Location:** At Laboratory
Customer Ref.	Delivery Challan and Packing List: VE/2154, Date: 31.08.2022	
Sample received on	01.09.2022	
Nature of sample	Welded Plate Sample	**Condition of sample:** Satisfactory
Sample Size(mm)	500 mm X 300 mm X 25 mm Thk	**Sample Drawn by:** Party, Stamped by "TUV INDIA"
Specification	IS 2062 GRADE E350 QUALITY C	**Test Completed on:** 07.09.2022
Sample ID	Project Name: EN202775 LA PORTE HYCO4, Client Name: ITT Engineering India Pvt. Ltd., Identification – VEPL/PQR/005-2G	

Results

Discipline – Mechanical Testing

Group – Ferrous material & its Alloys

All Weld Tensile Test – E2821ts3 | Test Method – AWS D1.1: 2020

Sr. No. / Location		Width (mm)	Thickness (mm)	Cross Section Area (mm²)	0.2% Proof Load (N)	0.2% Proof Stress (Mpa)	Ultimate Load (N)	Ultimate Tensile Strength (Mpa)	Gauge Length (mm)	Final Gauge Length (mm)	Elongation (%)	Reduction Dia. (mm)	Reduction of Area (%)
--	Req.	--	--	--	--	400 Min	--	490 Min	--	--	22 Min	--	--
--	U of M (±)	--	--	--	--	3.80	--	5.02	--	--	0.69	--	--
E2821ts3	Obs.	12.55	--	123.70	63319	511.87	71040	574.29	50.00	62.41	24.82	--	--

Sample Broken From – WGL

VISHAL ENTERPRISE QA/QC

Remarks – The Offered Sample complying Requirement of Client based on Reported Results ± U.O.M Within Permissible Limits.

Tested By	Reviewed & Authorized Signatory Amit Meghani	Witnessed By

GLOBAL METALLURGICAL SERVICES VADODARA

Technical Inspection Services TÜV 450 India

08/09/2022 (Viraj Desai)

- The Sample was not drawn by Laboratory.
- The above test reports relate only to sample submitted / tested.
- Test Reports Shall not be reproduced except in full, without written permission of laboratory.

Form – 20 R. 03

End of Test Report

Test Report

Name & Add. Of Customer	VISHAL ENTERPRISE D-2/E, 397-398, DAHEJ G.I.D.C, JOLWA, BHARUCH – 392 130.	**TC No.:** E2822ts3 **ULR No.:** TC836222000005300F **Date of Issue:** 08.09.2022
Type of Test	Tensile Test	**Page:** 1 of 1
Instrument Utilised	GMS-TM-03	**Location:** At Laboratory
Customer Ref.	Delivery Challan and Packing List: VE/2154, Date: 31.08.2022	
Sample received on	01.09.2022	
Nature of sample	Welded Plate Sample	**Condition of sample:** Satisfactory
Sample Size(mm)	500 mm X 300 mm X 25 mm Thk	**Sample Drawn by:** Party, Stamped by "TUV INDIA"
Specification	IS 2062 GRADE E350 QUALITY C	**Test Completed on:** 07.09.2022
Sample ID	Project Name: EN202775 LA PORTE HYCO4, Client Name: ITT Engineering India Pvt. Ltd., Identification – VEPL/PQR/005-3G	

Results

Discipline – Mechanical Testing

Group – Ferrous material & its Alloys

All Weld Tensile Test – E2822ts3 | Test Method – AWS D1.1: 2020

Sr. No. / Location		Width (mm)	Thickness (mm)	Cross Section Area (mm²)	0.2% Proof Load (N)	0.2% Proof Stress (Mpa)	Ultimate Load (N)	Ultimate Tensile Strength (Mpa)	Gauge Length (mm)	Final Gauge Length (mm)	Elongation (%)	Reduction Dia. (mm)	Reduction of Area (%)
--	Req.	--	--	--	--	400 Min	--	490 Min	--	--	22 Min	--	--
--	U of M (±)	--	--	--	--	3.80	--	5.02	--	--	0.69	--	--
E2822ts3	Obs.	12.50	--	122.72	64747	527.60	74004	603.03	50.00	62.76	25.52	--	--

Sample Broken From – WGL

Remarks – The Offered Sample complying Requirement of Client based on Reported Results ± U.O.M Within Permissible Limits.

Tested By	Reviewed & Authorized Signatory Amit Meghani	Witnessed By

- The Sample was not drawn by Laboratory.
- The above test reports relate only to sample submitted / tested.
- Test Reports Shall not be reproduced except in full, without written permission of laboratory.

Form – 20 R. 03

End of Test Report

Test Report

Name & Add. Of Customer	VISHAL ENTERPRISE D-2/E, 397-398, DAHEJ G.I.D.C, JOLWA, BHARUCH – 392 130.	**TC No.:** E2823ts3 **ULR No.:** TC836222000005301F **Date of Issue:** 08.09.2022
Type of Test	Tensile Test	**Page:** 1 of 1
Instrument Utilised	GMS-TM-03	**Location:** At Laboratory
Customer Ref.	Delivery Challan and Packing List: VE/2154, Date: 31.08.2022	
Sample received on	01.09.2022	
Nature of sample	Welded Plate Sample	**Condition of sample:** Satisfactory
Sample Size(mm)	500 mm X 300 mm X 25 mm Thk	**Sample Drawn by:** Party, Stamped by "TUV INDIA"
Specification	IS 2062 GRADE E350 QUALITY C	**Test Completed on:** 07.09.2022
Sample ID	Project Name: EN202775 LA PORTE HYCO4, Client Name: ITT Engineering India Pvt. Ltd., Identification – VEPL/PQR/005-4G	

Results

Discipline – Mechanical Testing

Group – Ferrous material & its Alloys

All Weld Tensile Test – E2823ts3 | Test Method – AWS D1.1: 2020

Sr. No. / Location		Width (mm)	Thickness (mm)	Cross Section Area (mm²)	0.2% Proof Load (N)	0.2% Proof Stress (Mpa)	Ultimate Load (N)	Ultimate Tensile Strength (Mpa)	Gauge Length (mm)	Final Gauge Length (mm)	Elongation (%)	Reduction Dia. (mm)	Reduction of Area (%)
--	Req.	--	--	--	--	400 Min	--	490 Min	--	--	22 Min	--	--
--	U of M (±)	--	--	--	--	3.80	--	5.02	--	--	0.69	--	--
E2823ts3	Obs.	12.51	--	122.92	63475	516.39	72162	587.08	50.00	61.70	23.40	--	--

Sample Broken From – WGL

VISHAL ENTERPRISE QC

Remarks – The Offered Sample complying Requirement of Client based on Reported Results ± U.O.M Within Permissible Limits.

Tested By	Reviewed & Authorized Signatory Amit Meghani	Witnessed By

GLOBAL METALLURGICAL SERVICES VADODARA

TUV Technical Inspection & Services India 450

08/09/2022

- The Sample was not drawn by Laboratory.
- The above test reports relate only to sample submitted / tested.
- Test Reports Shall not be reproduced except in full, without written permission of laboratory.

Form – 20 R. 03

End of Test Report

Test Report

Name & Add. Of Customer	VISHAL ENTERPRISE D-2/E, 397-398, DAHEJ G.I.D.C, JOLWA, BHARUCH – 392 130.	**TC No.**E2821ma **ULR :** -- **Date of Issue:** 07.09.2022
Type of Test	Macro Examination by stereo Microscope	**Page :** 1 of 1
Test Method	AWS D1.1: 2020	**Location :** At Laboratory
Instrument Utilised	GMS-TM-18	
Customer Ref.	Delivery Challan and Packing List: VE/2154, Date: 31.08.2022	
Sample received on	01.09.2022	
Nature of sample	Welded Plate Sample	**Condition of sample:** Satisfactory
Sample Size(mm)	500 mm X 300 mm X 25 mm Thk	**Sample Drawn by :** Party, Stamped by "TUV INDIA"
Specification	IS 2062 GRADE E350 QUALITY C	**Test Completed on :** 07.09.2022
Sample ID.	Project Name: EN202775 LA PORTE HYCO4, Client Name: ITT Engineering India Pvt. Ltd., Identification – VEPL/PQR/005-2G	

Results

Discipline – Mechanical Testing

Group – Ferrous and its alloy

Etchant : 10% Nital

Observation : Welding cross section Shows complete Fusion and free from cracks

VISHAL ENTERPRISE QA/QC

Remark	--

Tested By	Reviewed & Authorized Signatory Amit Meghani	Witnessed By

GLOBAL METALLURGICAL SERVICES VADODARA

Technical Inspection Services TÜV 450 TÜV India

07/09/2022

- The Sample was not drawn by Laboratory.
- The above test reports relate only to sample submitted / tested.
- Test Reports Shall not be reproduced except in full, without written permission of laboratory.

Form – 20 R. 03

End of Test Report

Test Report

Name & Add. Of Customer	VISHAL ENTERPRISE D-2/E, 397-398, DAHEJ G.I.D.C, JOLWA, BHARUCH – 392 130.	**TC No.**E2822ma **ULR :** --- **Date of Issue:** 07.09.2022
Type of Test	Macro Examination by stereo Microscope	**Page :** 1 of 1
Test Method	AWS D1.1: 2020	**Location :** At Laboratory
Instrument Utilised	GMS-TM-18	
Customer Ref.	Delivery Challan and Packing List: VE/2154, Date: 31.08.2022	
Sample received on	01.09.2022	
Nature of sample	Welded Plate Sample	**Condition of sample:** Satisfactory
Sample Size(mm)	500 mm X 300 mm X 25 mm Thk	**Sample Drawn by :** Party, Stamped by "TUV INDIA"
Specification	IS 2062 GRADE E350 QUALITY C	**Test Completed on :** 07.09.2022
Sample ID.	Project Name: EN202775 LA PORTE HYCO4, Client Name: ITT Engineering India Pvt. Ltd., Identification – VEPL/PQR/005-3G	

Results

Discipline – Mechanical Testing

Group – Ferrous and its alloy

Etchant : 10% Nital

Observation : Welding cross section Shows complete Fusion and free from cracks

VISHAL ENTERPRISE QA/QC

Remark	--

Tested By	Reviewed & Authorized Signatory Amit Meghani	Witnessed By

GLOBAL METALLURGICAL SERVICES VADODARA

Technical Inspection Services TUV 450 TUV India 07/09/2022

- The Sample was not drawn by Laboratory.
- The above test reports relate only to sample submitted / tested.
- Test Reports Shall not be reproduced except in full, without written permission of laboratory.

Form – 20 R. 03

End of Test Report

Test Report

Name & Add. Of Customer	VISHAL ENTERPRISE D-2/E, 397-398, DAHEJ G.I.D.C, JOLWA, BHARUCH – 392 130.	**TC No.**E2823ma **ULR :** --- **Date of Issue:** 07.09.2022
Type of Test	Macro Examination by stereo Microscope	**Page :** 1 of 1
Test Method	AWS D1.1: 2020	**Location :** At Laboratory
Instrument Utilised	GMS-TM-18	
Customer Ref.	Delivery Challan and Packing List: VE/2154, Date: 31.08.2022	
Sample received on	01.09.2022	
Nature of sample	Welded Plate Sample	**Condition of sample:** Satisfactory
Sample Size(mm)	500 mm X 300 mm X 25 mm Thk	**Sample Drawn by :** Party, Stamped by "TUV INDIA"
Specification	IS 2062 GRADE E350 QUALITY C	**Test Completed on :** 07.09.2022
Sample ID.	Project Name: EN202775 LA PORTE HYCO4, Client Name: ITT Engineering India Pvt. Ltd., Identification – VEPL/PQR/005-4G	

Results

Discipline – Mechanical Testing

Group – Ferrous and its alloy

Etchant : 10% Nital

Observation : Welding cross section Shows complete Fusion and free from cracks

VISHAL ENTERPRISE QA/QC

Remark	--

Tested By	Reviewed & Authorized Signatory Amit Meghani	Witnessed By

GLOBAL METALLURGICAL SERVICES VADODARA

Technical Inspection Services TUV 450 TUV India 07/09/2022

- The Sample was not drawn by Laboratory.
- The above test reports relate only to sample submitted / tested.
- Test Reports Shall not be reproduced except in full, without written permission of laboratory.

Form – 20 R. 03

End of Test Report

GLOBAL METALLURGICAL SERVICES

(NABL Accredited Laboratory as per ISO/IEC 17025 : 2017)

Chemical Analysis | Mechanical Testing | Metallurgical Testing | Corrosion Testing | Site Services

TC-8362

Test Report

Name & Add. Of Customer	VISHAL ENTERPRISE D-2/E, 397-398, DAHEJ G.I.D.C, JOLWA, BHARUCH – 392 130.	**TC No.:** E2821ha **ULR No.:** TC836222000005273F **Date of Issue:** 08.09.2022
Type of Test	Vickers Hardness Test	**Page:** 1 of 1
Instrument Utilised	GMS-TM-05	**Location:** At Laboratory
Customer Ref.	Delivery Challan and Packing List: VE/2154, Date: 31.08.2022	
Sample received on	01.09.2022	
Nature of sample	Welded Plate Sample	**Condition of sample:** Satisfactory
Sample Size(mm)	500 mm X 300 mm X 25 mm Thk	**Sample Drawn by:** Party, Stamped by "TUV INDIA"
Specification	IS 2062 GRADE E350 QUALITY C	**Test Completed on:** 07.09.2022
Sample ID	Project Name: EN202775 LA PORTE HYCO4, Client Name: ITT Engineering India Pvt. Ltd., Identification – VEPL/PQR/005-2G	

Results

Discipline – Mechanical Testing,

Group – Ferrous material & its Alloys

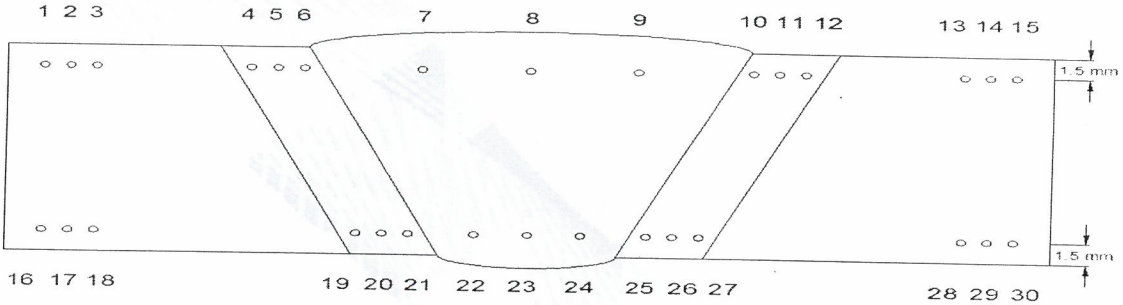

Vickers Hardness Test – E2821ha	Test Method – ASTM E92-17	(±)Expanded Uncertainty: --

Hardness Reading In HV at load 10 kgf

SR No	Area (TOP)	Observation (HV10)	SR No	Area (BOTTOM)	Observation (HV10)
1	PARENT	164	16	PARENT	166
2	PARENT	163	17	PARENT	163
3	PARENT	161	18	PARENT	162
4	HAZ	203	19	HAZ	209
5	HAZ	201	20	HAZ	205
6	HAZ	198	21	HAZ	207
7	Weld	180	22	Weld	183
8	Weld	179	23	Weld	179
9	Weld	177	24	Weld	178
10	HAZ	209	25	HAZ	205
11	HAZ	207	26	HAZ	202
12	HAZ	205	27	HAZ	201
13	PARENT	162	28	PARENT	165
14	PARENT	160	29	PARENT	162
15	PARENT	168	30	PARENT	166

VISHAL ENTERPRISE QA/QC

Remarks: observation. Results to be evaluated

Tested By	Reviewed & Authorized Signatory Amit Meghani	Witnessed By 08/09/2022

- The Sample was not drawn by Laboratory.
- The above test reports relate only to sample submitted / tested.
- Test Reports Shall not be reproduced except in full, without written permission of laboratory.

Form – 20 R. 03

End of Test Report

254/I, Industrial Lining, G.I.D.C., Makarpura, Vadodara - 390 010.
Call : 7490934252 Email : globallab17@gmail.com ● Website : www.globallaboratory.in

GLOBAL METALLURGICAL SERVICES

(NABL Accredited Laboratory as per ISO/IEC 17025 : 2017)

Chemical Analysis | Mechanical Testing | Metallurgical Testing | Corrosion Testing | Site Services

TC-8362

Test Report

Name & Add. Of Customer	VISHAL ENTERPRISE D-2/E, 397-398, DAHEJ G.I.D.C, JOLWA, BHARUCH – 392 130.	**TC No.:** E2822ha **ULR No.:** TC836222000005274F **Date of Issue:** 08.09.2022
Type of Test	Vickers Hardness Test	**Page:** 1 of 1
Instrument Utilised	GMS-TM-05	**Location:** At Laboratory
Customer Ref.	Delivery Challan and Packing List: VE/2154, Date: 31.08.2022	
Sample received on	01.09.2022	
Nature of sample	Welded Plate Sample	**Condition of sample:** Satisfactory
Sample Size(mm)	500 mm X 300 mm X 25 mm Thk	**Sample Drawn by:** Party, Stamped by "TUV INDIA"
Specification	IS 2062 GRADE E350 QUALITY C	**Test Completed on:** 07.09.2022
Sample ID	Project Name: EN202775 LA PORTE HYCO4, Client Name: ITT Engineering India Pvt. Ltd., Identification – VEPL/PQR/005-3G	

Results

Discipline – Mechanical Testing,

Group – Ferrous material & its Alloys

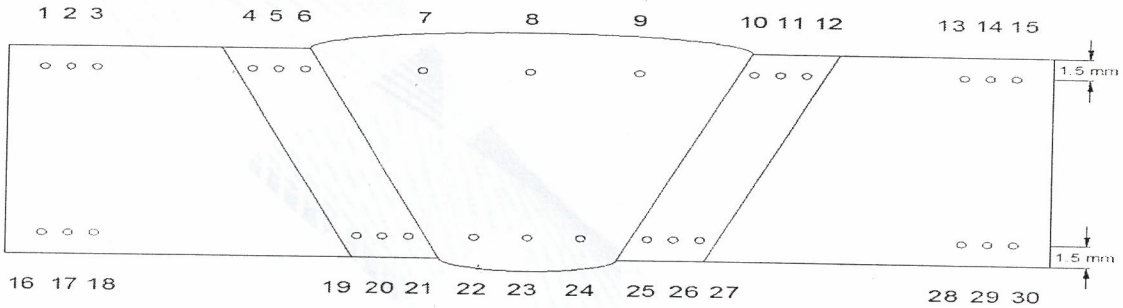

Vickers Hardness Test – E2822ha | Test Method – ASTM E92-17 | (±)Expanded Uncertainty: --

Hardness Reading In HV at load 10 kgf

SR No	Area (TOP)	Observation (HV10)
1	PARENT	194
2	PARENT	189
3	PARENT	188
4	HAZ	203
5	HAZ	215
6	HAZ	209
7	Weld	188
8	Weld	183
9	Weld	181
10	HAZ	215
11	HAZ	209
12	HAZ	207
13	PARENT	186
14	PARENT	189
15	PARENT	186

SR No	Area (BOTTOM)	Observation (HV10)
16	PARENT	193
17	PARENT	189
18	PARENT	190
19	HAZ	213
20	HAZ	205
21	HAZ	203
22	Weld	181
23	Weld	185
24	Weld	190
25	HAZ	205
26	HAZ	210
27	HAZ	209
28	PARENT	185
29	PARENT	194
30	PARENT	188

VISHAL ENTERPRISE QA/QC

Remarks: observation. Results to be evaluated

Tested By	Reviewed & Authorized Signatory Amit Meghani	Witnessed By
	GLOBAL METALLURGICAL SERVICES VADODARA	Technical Inspection Services TUV 450 TUV India 08/09/2022

- The Sample was not drawn by Laboratory.
- The above test reports relate only to sample submitted / tested.
- Test Reports Shall not be reproduced except in full without written permission of laboratory.

End of Test Report

Form – 20 R. 03

GLOBAL METALLURGICAL SERVICES

(NABL Accredited Laboratory as per ISO/IEC 17025 : 2017)

Chemical Analysis I Mechanical Testing I Metallurgical Testing I Corrosion Testing I Site Services

TC-8362

Test Report

Name & Add. Of Customer	VISHAL ENTERPRISE D-2/E, 397-398, DAHEJ G.I.D.C, JOLWA, BHARUCH – 392 130.	**TC No.:** E2823ha **ULR No.:** TC836222000005275F **Date of Issue:** 08.09.2022
Type of Test	Vickers Hardness Test	**Page:** 1 of 1
Instrument Utilised	GMS-TM-05	**Location:** At Laboratory
Customer Ref.	Delivery Challan and Packing List: VE/2154, Date: 31.08.2022	
Sample received on	01.09.2022	
Nature of sample	Welded Plate Sample	**Condition of sample:** Satisfactory
Sample Size(mm)	500 mm X 300 mm X 25 mm Thk	**Sample Drawn by:** Party, Stamped by "TUV INDIA"
Specification	IS 2062 GRADE E350 QUALITY C	**Test Completed on:** 07.09.2022
Sample ID	Project Name: EN202775 LA PORTE HYCO4, Client Name: ITT Engineering India Pvt. Ltd., Identification – VEPL/PQR/005- 4G	

Results

Discipline – Mechanical Testing,

Group – Ferrous material & its Alloys

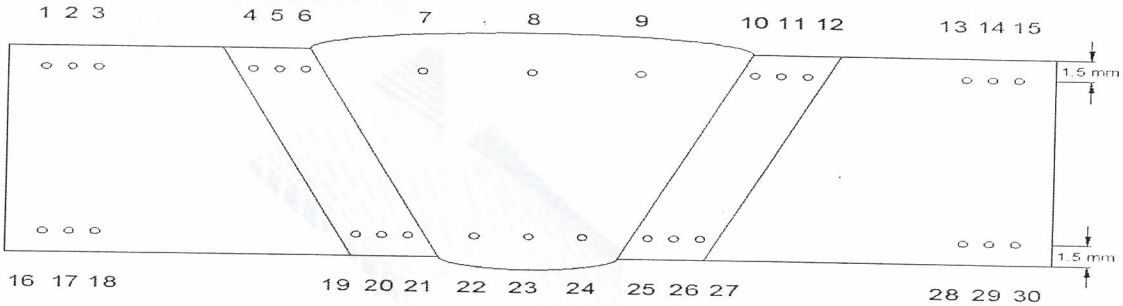

Vickers Hardness Test – E2823ha	Test Method – ASTM E92-17	(±)Expanded Uncertainty: --

Hardness Reading In HV at load 10 kgf

SR No	Area (TOP)	Observation (HV10)	SR No	Area (BOTTOM)	Observation (HV10)
1	PARENT	172	16	PARENT	169
2	PARENT	174	17	PARENT	173
3	PARENT	171	18	PARENT	172
4	HAZ	213	19	HAZ	212
5	HAZ	209	20	HAZ	205
6	HAZ	207	21	HAZ	207
7	Weld	180	22	Weld	179
8	Weld	178	23	Weld	176
9	Weld	182	24	Weld	181
10	HAZ	216	25	HAZ	210
11	HAZ	209	26	HAZ	209
12	HAZ	213	27	HAZ	212
13	PARENT	169	28	PARENT	170
14	PARENT	172	29	PARENT	173
15	PARENT	173	30	PARENT	176

VISHAL ENTERPRISE QA/QC

Remarks: Observation. Results to be evaulated

Tested By	Reviewed & Authorized Signatory Amit Meghani	Witnessed By

GLOBAL METALLURGICAL SERVICES VADODARA

Technical Inspection Services TUV India 08/09/2022 (Vijay Desai)

- The Sample was not drawn by Laboratory.
- The above test reports relate only to sample submitted / tested.
- Test Reports Shall not be reproduced except in full, without written permission of laboratory.

Form – 20 R. 03

End of Test Report

254/I, Industrial Lining, G.I.D.C., Makarpura, Vadodara - 390 010.
Call : 7490934252 Email : globallab17@gmail.com ● Website : www.globallaboratory.in

Test Report

Name & Add. Of Customer	VISHAL ENTERPRISE D-2/E, 397-398, DAHEJ G.I.D.C, JOLWA, BHARUCH – 392 130.	**TC No.**: E2821cv **ULR No.:** TC836222000005279F **Date of Issue:** 08.09.2022
Type of Test	Impact Test	**Page:** 1 of 1
Instrument Utilised	GMS-TM-07	**Location:** At Laboratory
Customer Ref.	Delivery Challan and Packing List: VE/2154, Date: 31.08.2022	
Sample received on	01.09.2022	
Nature of sample	Welded Plate Sample	**Condition of sample:** Satisfactory
Sample Size(mm)	500 mm X 300 mm X 25 mm Thk	**Sample Drawn by:** Party, Stamped by "TUV INDIA"
Specification	IS 2062 GRADE E350 QUALITY C (Client Requirement)	**Test Completed on:** 08.09.2022
Sample ID	Project Name: EN202775 LA PORTE HYCO4, Client Name: ITT Engineering India Pvt. Ltd., Identification – VEPL/PQR/005-2G	

Results

Discipline – Mechanical Testing,

Group – Ferrous material & its Alloys

Impact Testing – E2821cv		Test Method – ASTM A370-21			(±)U Of M (J) : 2.96		Test Temperature (°C): - 20	
Location		Sample Size (mm)	Sample 1 (J)	Sample 2 (J)	Sample 3 (J)	Average Value (J)	Required Value Min. (J)	
							Average Value	Individual Value
E2821cv1 (Weld)	Actual size	10 x 10 x 55	110	104	112	108.67	27	20
--	--	--	Sample 4 (J)	Sample 5 (J)	--	--	--	--
--	--	10 x 10 x 55	98	136	--	--	--	--
--	--	--	Sample 1 (J)	Sample 2 (J)	Sample 3 (J)	Average Value (J)	--	--
E2821cv2 (HAZ)	Actual size	10 x 10 x 55	40	44	36	40.00	27	20
--	--	--	Sample 4 (J)	Sample 5 (J)	--	--	--	--
--	--	10 x 10 x 55	32	54	--	--	--	--

VISHAL ENTERPRISE W/QC

Remarks: The Offered Sample complying Requirement of IS 2062 GRADE E350 QUALITY C (Client Requirement) based on Reported Results ± U.O.M Within Permissible Limits.

Tested By	**Reviewed & Authorized Signatory** **Amit Meghani**	**Witnessed By**

GLOBAL METALLURGICAL SERVICES VADODARA

Technical Inspection Services TUV 450 TUV India

08/09/2022

- The Sample was not drawn by Laboratory.
- The above test reports relate only to sample submitted / tested.
- Test Reports Shall not be reproduced except in full, without written permission of laboratory.

Form – 20 R. 03

End of Test Report

Test Report

Name & Add. Of Customer	VISHAL ENTERPRISE D-2/E, 397-398, DAHEJ G.I.D.C, JOLWA, BHARUCH – 392 130.	**TC No.**: E2822cv **ULR No.:** TC836222000005280F **Date of Issue:** 08.09.2022
Type of Test	Impact Test	**Page:** 1 of 1
Instrument Utilised	GMS-TM-07	**Location:** At Laboratory
Customer Ref.	Delivery Challan and Packing List: VE/2154, Date: 31.08.2022	
Sample received on	01.09.2022	
Nature of sample	Welded Plate Sample	**Condition of sample:** Satisfactory
Sample Size(mm)	500 mm X 300 mm X 25 mm Thk	**Sample Drawn by:** Party, Stamped by " TUV INDIA"
Specification	IS 2062 GRADE E350 QUALITY C (Client Requirement)	**Test Completed on:** 08.09.2022
Sample ID	Project Name: EN202775 LA PORTE HYCO4, Client Name: ITT Engineering India Pvt. Ltd., Identification – VEPL/PQR/005-3G	

Results

Discipline – Mechanical Testing,

Group – Ferrous material & its Alloys

Impact Testing – E2822cv		Test Method – ASTM A370-21			(±)U Of M (J) : 2.96		Test Temperature (°C): - 20	
Location		Sample Size (mm)	Sample 1 (J)	Sample 2 (J)	Sample 3 (J)	Average Value (J)	Required Value Min. (J)	
							Average Value	Individual Value
E2822cv1 (Weld)	Actual size	10 x 10 x 55	42	46	38	41.33	27	20
--	--	--	Sample 4 (J)	Sample 5 (J)	--	--	--	--
--	--	10 x 10 x 55	28	48	--	--	--	--
--	--	--	Sample 1 (J)	Sample 2 (J)	Sample 3 (J)	Average Value (J)	--	--
E2822cv2 (HAZ)	Actual size	10 x 10 x 55	140	120	136	132.00	27	20
--	--	--	Sample 4 (J)	Sample 5 (J)	--	--	--	--
--	--	10 x 10 x 55	112	152	--	--	--	--

VISHAL ENTERPRISE QC

Remarks: The Offered Sample complying Requirement of IS 2062 GRADE E350 QUALITY C (Client Requirement) based on Reported Results ± U.O.M Within Permissible Limits.

Tested By	Reviewed & Authorized Signatory Amit Meghani	Witnessed By

GLOBAL METALLURGICAL SERVICES VADODARA

Technical Inspection Services TUV 450 TUV India

08/09/2022

- The Sample was not drawn by Laboratory.
- The above test reports relate only to sample submitted / tested.
- Test Reports Shall not be reproduced except in full, without written permission of laboratory.

Form – 20 R. 03

End of Test Report

Test Report

Name & Add. Of Customer	VISHAL ENTERPRISE D-2/E, 397-398, DAHEJ G.I.D.C, JOLWA, BHARUCH – 392 130.	**TC No.**: E2823cv **ULR No.:** TC836222000005281F **Date of Issue:** 08.09.2022
Type of Test	Impact Test	**Page:** 1 of 1
Instrument Utilised	GMS-TM-07	**Location:** At Laboratory
Customer Ref.	Delivery Challan and Packing List: VE/2154, Date: 31.08.2022	
Sample received on	01.09.2022	
Nature of sample	Welded Plate Sample	**Condition of sample:** Satisfactory
Sample Size(mm)	500 mm X 300 mm X 25 mm Thk	**Sample Drawn by:** Party, Stamped by "TUV INDIA"
Specification	IS 2062 GRADE E350 QUALITY C (Client Requirement)	**Test Completed on:** 08.09.2022
Sample ID	Project Name: EN202775 LA PORTE HYCO4, Client Name: ITT Engineering India Pvt. Ltd., Identification – VEPL/PQR/005-4G	

Results

Discipline – Mechanical Testing,

Group – Ferrous material & its Alloys

Impact Testing – E2823cv		Test Method – ASTM A370-21			(±)U Of M (J) : 2.96		Test Temperature (°C): - 20	
Location		Sample Size (mm)	Sample 1 (J)	Sample 2 (J)	Sample 3 (J)	Average Value (J)	Required Value Min. (J)	
							Average Value	Individual Value
E2823cv1 (Weld)	Actual size	10 x 10 x 55	54	56	62	57.33	27	20
--	--	--	Sample 4 (J)	Sample 5 (J)	--	--	--	--
--	--	10 x 10 x 55	42	76	--	--	--	--
--	--	--	Sample 1 (J)	Sample 2 (J)	Sample 3 (J)	Average Value (J)	--	--
E2823cv2 (HAZ)	Actual size	10 x 10 x 55	112	92	96	100.00	27	20
--	--	--	Sample 4 (J)	Sample 5 (J)	--	--	--	--
--	--	10 x 10 x 55	88	126	--	--	--	--

Remarks: The Offered Sample complying Requirement of IS 2062 GRADE E350 QUALITY C (Client Requirement) based on Reported Results ± U.O.M Within Permissible Limits.

Tested By	Reviewed & Authorized Signatory Amit Meghani	Witnessed By

- The Sample was not drawn by Laboratory.
- The above test reports relate only to sample submitted / tested.
- Test Reports Shall not be reproduced except in full, without written permission of laboratory.

Form – 20 R. 03

End of Test Report

VISHAL ENTERPRISE & VRISHAL ENGINEERING PRIVATE LIMITED
GROUP OF COMPANIES

PQR / WPQ TEST RUNNING SHEET

DATE : 29.08.2022

CLIENT : ITT ENGINEERING INDIA PVT LTD.
PROJECT NAME : La Porte HyCO-4"
WPS No. : VEPL/PWPS/005 REV.02
TEST COUPON SIZE & THK : 500 mm X 300 mm X 25 mm
MATERIAL SPEC / GRADE : IS 2062 E350 GR. C
MATERIAL HEAT NO. : F900998 (VE/ITT/STR/IMIR/002-7)
WELDING POSITION : 3G
PROGRESSION : UP-HILL
TEST COUPON No. : VEPL/PQR/005 - 3G
WELDER NAME : ASWINI KUMAR
WELDER No. : S-AB13
WELDING RECTIFIER NO : M121219104500

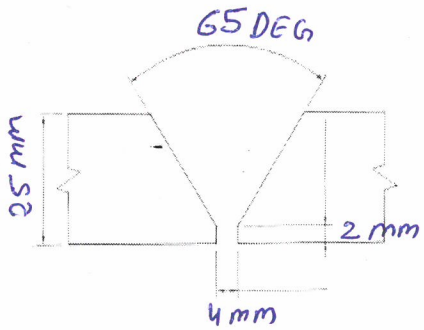

WELDING CONSUMABLES : E-7018 (Batch : 62202010(2.5 mm) , 62202006(3.15 mm))

Shelding Gas Flow: L/min NA

BRAND : ADOR

Purging Gas Flow: L/min NA

PRE-HEAT TEMPERATURE : 25° C

WELD LAYERS	PROCESS	FILLER METAL		CURRENT		VOLTS	INTER-PASS TEMP (MAX)	TRAVEL SPEED (mm/min.)	HEAT-INPUT Max. (kJ/mm)
		AWS CLASS	SIZE (mm)	TYPE POLARITY	AMPS				
ROOT	SMAW	E 7018	2.5	DCEP	80-82	23-26	80° C	75	1.7
HOT-PASS	SMAW	E 7018	3.15	DCEP	112-114	23-26	197° C	88.7	2
FILL-UP-1	SMAW	E 7018	3.15	DCEP	112-115	23-27	197° C	89	2.09
FILL-UP-2	SMAW	E 7018	3.15	DCEP	113-114	23-27	200° C	85	2.17
FILL-UP-3	SMAW	E 7018	3.15	DCEP	114-117	24-28	187° C	92.72	2.11
FILL-UP-4	SMAW	E 7018	3.15	DCEP	117-120	24-28	160° C	93.8	2.14
FILL-UP-5	SMAW	E 7018	3.15	DCEP	115-118	24-28	155° C	102	2.08
FILL-UP-6	SMAW	E 7018	3.15	DCEP	116-119	24-28	183° C	127.5	1.56
FILL-UP-7	SMAW	E 7018	3.15	DCEP	116-117	24-28	200° C	145.7	1.34
FILL-UP-8	SMAW	E 7018	3.15	DCEP	115-117	24-28	171° C	113	1.73
CAP-1	SMAW	E 7018	3.15	DCEP	114-116	24-28	150° C	113	1.72
CAP-2	SMAW	E 7018	3.15	DCEP	114-117	24-27	197.5° C	92.7	2.04
CAP-3	SMAW	E 7018	3.15	DCEP	114-117	24-27	180° C	102	1.85

VE-QC	CLEINT QC/ TPI
VISHAL ENTERPRISE QA/QC	REVIEWED / NOTED ...✓.....%WITNESSED 29/08/2022 TÜV Technical Inspection Services 697 TÜV India RAVINDRA PRAJAPATI
NAME: Yagyavalakya Bairagi	NAME:
DATE: 29.08.22	DATE:

VE/QA/FORMAT/52 REV.02

VISHAL ENTERPRISE & VRISHAL ENGINEERING PRIVATE LIMITED
GROUP OF COMPANIES

PQR / WPQ TEST RUNNING SHEET

DATE : 29.08.2022

CLIENT : ITT ENGINEERING INDIA PVT LTD.
PROJECT NAME : La Porte HyCO-4"
WPS No. : VEPL/PWPS/005 REV.02
TEST COUPON SIZE & THK : 500 mm X 300 mm X 25 mm
MATERIAL SPEC / GRADE : IS 2062 E350 GR. C
MATERIAL HEAT NO. : F900998 (VE/ITT/STR/IMIR/002-7)
WELDING POSITION : 4G
PROGRESSION : UP-HILL
TEST COUPON No. : VEPL/PQR/005 - 4G
WELDER NAME : ASWINI KUMAR
WELDER No. : S-AB13
WELDING RECTIFIER NO : M121219104500
WELDING CONSUMABLES : E-7018 (Batch : 62202010(2.5 mm) , 62202006(3.15 mm) & 62109010 (4 mm))
BRAND : ADOR
PRE-HEAT TEMPERATURE : 25° C

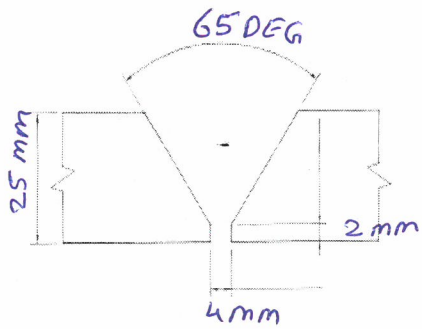

Shelding Gas Flow: L/min — NA
Purging Gas Flow: L/min — NA

WELD LAYERS	PROCESS	FILLER METAL		CURRENT		VOLTS	INTER-PASS TEMP (MAX)	TRAVEL SPEED (mm/min.)	HEAT-INPUT Max. (kJ/mm)
		AWS CLASS	SIZE (mm)	TYPE POLARITY	AMPS				
ROOT	SMAW	E 7018	2.5	DCEP	80-82	24-27	172°C	60	2.21
HOT-PASS	SMAW	E 7018	3.15	DCEP	114-115	24-26	160°C	76	2.36
FILL-UP-1	SMAW	E 7018	3.15	DCEP	113-114	24-28	165°C	85	2.25
FILL-UP-2	SMAW	E 7018	3.15	DCEP	116-117	26-28	172°C	89	2.2
FILL-UP-3	SMAW	E 7018	3.15	DCEP	115-117	24-27	170°C	90	2.1
FILL-UP-4	SMAW	E 7018	4	DCEP	151-155	23-27	180°C	101	2.48
FILL-UP-5	SMAW	E 7018	4	DCEP	144-149	24-28	201°C	108	2.3
FILL-UP-6	SMAW	E 7018	4	DCEP	148-152	24-28	222°C	104	2.45
FILL-UP-7	SMAW	E 7018	4	DCEP	140-150	23-27	193°C	98	2.47
FILL-UP-8	SMAW	E 7018	4	DCEP	151-158	23-27	211°C	111	2.3
CAP-1	SMAW	E 7018	3.15	DCEP	147-151	22-25	145°C	102	2.22
CAP-2	SMAW	E 7018	3.15	DCEP	148-152	23-25	162°C	93	2.45
CAP-3	SMAW	E 7018	3.15	DCEP	142-150	24-28	182°C	121	2.08

VE QC	CLEINT QC/ TPI
VISHAL ENTERPRISE QA/QC	REVIEWED / ~~NOTED~~ ✓ %WITNESSED 29/08/2022 Technical Inspection Services TÜV 697 TÜV India
NAME: Yagyavalakya Bairagi	NAME: RAVINDRA PRAJAPATI
DATE: 29.08.22	DATE:

VE/QA/FORMAT/52 REV.02

VISHAL ENTERPRISE & VRISHAL ENGINEERING PRIVATE LIMITED
GROUP OF COMPANIES

PQR / WPQ TEST RUNNING SHEET

DATE : 29.08.2022

CLIENT : ITT ENGINEERING INDIA PVT LTD.
PROJECT NAME : La Porte HyCO-4"
WPS No. : VEPL/PWPS/005 REV.02
TEST COUPON SIZE & THK : 500 mm X 300 mm X 25 mm
MATERIAL SPEC / GRADE : IS 2062 E350 GR. C
MATERIAL HEAT NO. : F900998 (VE/ITT/STR/IMIR/002-7)
WELDING POSITION : 2G
PROGRESSION : UP-HILL
TEST COUPON No. : VEPL/PQR/005 - 2G
WELDER NAME : ASWINI KUMAR
WELDER No. : S-AB13
WELDING RECTIFIER NO : M121219104500
WELDING CONSUMABLES : E-7018 (Batch : 62202010(2.5 mm) , 62202006(3.15 mm) & 62109010 (4 mm))
BRAND : ADOR
PRE-HEAT TEMPERATURE : 25° C

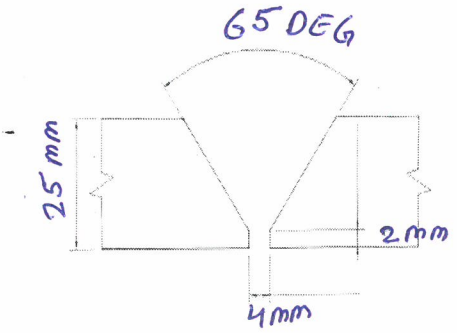

Shelding Gas Flow: L/min NA
Purging Gas Flow: L/min NA

WELD LAYERS	PROCESS	FILLER METAL		CURRENT		VOLTS	INTER-PASS TEMP (MAX)	TRAVEL SPEED (mm/min.)	HEAT-INPUT Max. (kJ/mm)
		AWS CLASS	SIZE (mm)	TYPE POLARITY	AMPS				
ROOT	SMAW	E 7018	2.5	DCEP	86-91	24-27	195° C	59.5	2.47
HOT-PASS	SMAW	E 7018	3.15	DCEP	100-102	22-24	170° C	90.9	1.61
FILL-UP-1	SMAW	E 7018	4.00	DCEP	150-160	22-28	185° C	142.8	1.88
FILL-UP-2	SMAW	E 7018	4.00	DCEP	150-161	23-27	180° C	139.6	1.86
FILL-UP-3	SMAW	E 7018	4.00	DCEP	155-165	23-27	161° C	125	2.13
FILL-UP-4	SMAW	E 7018	4.00	DCEP	152-161	23-27	181° C	111	2.34
FILL-UP-5	SMAW	E 7018	4.00	DCEP	155-166	23-25	171° C	125	1.992
FILL-UP-6	SMAW	E 7018	4.00	DCEP	150-158	23-26	165° C	135	1.82
FILL-UP-7	SMAW	E 7018	4.00	DCEP	160-168	22-24	170° C	142	1.7
FILL-UP-8	SMAW	E 7018	4.00	DCEP	155-165	23-26	181° C	125	2.05
CAP-1	SMAW	E 7018	3.15	DCEP	115-129	23-26	190° C	100	2.01
CAP-2	SMAW	E 7018	3.15	DCEP	120-130	23-28	189° C	90.9	2.4
CAP-3	SMAW	E 7018	3.15	DCEP	125-129	23-27	195° C	100	2.08
CAP-4	SMAW	E 7018	3.15	DCEP	124-131	23-26	170° C	111	1.84
CAP-5	SMAW	E 7018	3.15	DCEP	122-130	23-27	185° C	125	1.68

VE-QC	CLEINT QC/ TPI
VISHAL ENTERPRISE QA/QC	REVIEWED / ~~NOTED~~ ...✓...%WITNESSED 29/08/2022 Technical Inspection Services TÜV 697 TÜV India
NAME: Yagyavalakya Bairagi	NAME: RAVINDRA PRAJAPATI
DATE: 29.08.22	DATE:

VE/QA/FORMAT/52 REV.02

VISHAL ENTERPRISE & VRISHAL ENGINEERING PRIVATE LIMITED
GROUP OF COMPANIES
WELD VISUAL INSPECTION REPORT (PQR)

CLIENT	ITT ENGINEERING INDIA PVT LTD.	Report No	VE/ITT/PQR/WV/01
PROJECT	La Porte HyCO-4"	Date	29.08.2022
WO NO	-		

SR NO	PQR TEST COUPON NO.	WELDER NO.	WELDER NAME	MATERIAL	TYPE OF WELD	WELDING PROCESS	WPS NO.	APPLICABLE CODE	SIZE (mm)	RESULT	REMARKS
1	VEPL/PQR/005 - 2G	S-AB13	ASWINI KUMAR	IS 2062 E350 GR.C	CJP	SMAW	VEPL/PWPS/005	AWS D1.1	500 X 300 X 25	ACC	
2	VEPL/PQR/005 - 3G	S-AB13	ASWINI KUMAR	IS 2062 E350 GR.C	CJP	SMAW	VEPL/PWPS/005	AWS D1.1	500 X 300 X 25	ACC	
3	VEPL/PQR/005 - 4G	S-AB13	ASWINI KUMAR	IS 2062 E350 GR.C	CJP	SMAW	VEPL/PWPS/005	AWS D1.1	500 X 300 X 25	ACC	

QC CHECK SHEET — CHECKED — X NOT APPLICABLE

DOCUMENT VERIFICATION	MARKING VERIFICATION CHECK	WELD SURFACE DEFECT CHECK	VISUAL CHECK
☐ APPROVED NDT DRG./TESTPLAN WITH LATEST REV. ☐ QUALIFIED WELDER LIST ☐ APPROVED WPS	☐ JOINT NO. ☑ WELDER NO.	☑ SPATTER ☑ REINFORCEMENT ☑ POROSITY/PIN HOLES ☑ SLAG ☑ CRACK ☑ UNDER CUT ☐ LUMPS/HIGH SPOT ☑ BEAD APEARANCE/WEAVING ☑ WELD SIZE ☑ UNDER FILL	☑ ARC STRIKE ☑ DISTORTION ☐ CLEAT MARK ☐ CORNER SEALING/ROUNDING ☑ PHYSICAL CONDITION

	VE QC	CLIENT QC / TPIA
SIGNATURE	Yajyavalakya Bairagi	REVIEWED / NOTED ✓ %WITNESSED
NAME	Yajyavalakya Bairagi	RAVINDRA PRAJAPATI
DATE	29.08.22	29/08/2022

VISHAL ENTERPRISE QA/QC

Technical Inspection Services TÜV 697 TÜV India

VE/QA/FORMAT/28A REV.00

VISHAL ENTERPRISE & VRISHAL ENGINEERING PRIVATE LIMITED
GROUP OF COMPANIES

RADIOGRAPHY TEST REPORT

CLIENT: ITT ENGINEERING INDIA PVT LTD.	PO/WO NO.: -	REPORT NO:	VE/ITT/PQR/01
PROJECT: La Porte HyCO-4"		RT. Date:	30.08.2022
ITP No: -		Test Date:	29.08.2022
Source :Ir-192	Film : D7	Penetrameter :	1B
Strength: 8 Ci	Density : 2 to 4	Sensitivity: 2%	
Procedure No : -		Acceptance Standard : AWS D1.1	

Sr. No	PQR TEST COUPON NO.	WELDER NO.	MATERIAL	Size (mm)	Thk. (mm)	Technique	Segment	Film Size	Observation	Result
1	VEPL/PQR/005 - 2G	S-AB13	IS 2062 E350 GR.C (CS)	500 X 300	25	SWSI	AB	15X4	NSD	ACC
							BC	15X4	NSD	ACC
2	VEPL/PQR/005 - 3G	S-AB13	IS 2062 E350 GR.C (CS)	500 X 300	25	SWSI	AB	15X4	NSD	ACC
							BC	15X4	NSD	ACC
3	VEPL/PQR/005 - 4G	S-AB13	IS 2062 E350 GR.C (CS)	500 X 300	25	SWSI	AB	15X4	NSD	ACC
							BC	15X4	NSD	ACC

LEGENDS:

BT-BURN THROUGH, CK-CRACK, CP-CLUSTER POROSITY, CR-CUT & REWELD, CS-CHECK SURFACE, EP-EXCESS PENETRATION, DP-DEPERESSION, LF-LACK OF FUSION, LM-LOOSE MATERIAL, LP-LACK OF PENETRATION, MM-MISMATCH, PO-POROSITY, SI-SLAG INCLUSION, TI-TUNGUSTEN INCLUSION, UC-UNDERCUT, RS-RESHOOT, RT-RETAKE, MRS-MERGE & RESHOOT, SM-SCREEN MARK, PM-PROCESS MARK, NM-NAIL MARK, FM-FIM MARK, WM-WATER MARK, LD-LOW DENSITY, HD-HIGH DENSITY

	VE QC (L-II/III)	CLIENT-QC / TPI
Sign		RT films - REVIEWED / NOTED ✓ ...%WITNESSED
Name	Hardik	HARDIK PRAJAPTI
Date	30.08.2022	30-08-2022

VE/QA/FORMAT/07 REV.2

MILL TEST CERTIFICATE

JSW Steel Limited

SURVEY NO - 659, VILLAGE - VARSAMEDI, TA. - ANJAR (KUTCH) GUJARAT INDIA - 370110

Anjar Works

IS- 2062 CM/L- 7945703

TEST CERTIFICATE NO. : JSW/PCMD/711880301

DATE : 20.07.2022

CUSTOMER

P. O. NO.

SPECIFICATION : EN 10025-2 : 2019 / IS 2062 : 2011

GRADE : S355J2+N / E350 C

UT STD. : ASTM A578 Level B

Impact Temp.(°C) : -20

Sr. No.	Plate / Coil No.	Heat No.	Thk (MM)	Width (MM)	Length (MM)	Weight (MT)	Mechanical Properties (Transverse Tensile) 1 YS* (MPa)	1 UTS (MPa)	1 %EL 5.65√a	1 %RA	2 YS* (MPa)	2 UTS (MPa)	2 %EL 5.65√a	2 %RA	Bend (Transverse)	CHARPY V-NOTCH IMPACT TEST (Joules) Longitudinal 1	2	3	AVG	Grain size (ASTME 112)	Z - Direction Test (Through Thickness) 1	2	3	AVG	Y Groove Crackability Test			NDTT	Remarks
Specified Requirement						Min	355	490	22	---	355	490	22	---	≤25-2T, >25-NA	---			27	---	---	---	---	---	---	---	---	---	---
						Max	---	630	---	---	---	630	---	---		---			---	---	---	---	---	---	---	---	---	---	---
1	22GP1169A1	F900407	22.00	2500	12000	5.181	412	523	27	---	416	527	28	---	OK	93	77	104	91	---	---	---	---	---	---	---	---	---	---
2	22GP1469A1	D900572	18.00	2500	12000	4.239	412	527	30	---	418	531	28	---	OK	68	74	77	73	---	---	---	---	---	---	---	---	---	---
3	22GP2185A1	F900998	25.00	2500	12000	5.888	411	523	30	---	415	529	26	---	OK	74	85	71	77	---	---	---	---	---	---	---	---	---	---
4	22GP2185A2	F900998	25.00	2500	12000	5.888	411	523	30	---	415	529	26	---	OK	74	85	71	77	---	---	---	---	---	---	---	---	---	---
5	22GP2194A1	F900998	25.00	2500	12000	5.888	411	523	30	---	415	529	26	---	OK	74	85	71	77	---	---	---	---	---	---	---	---	---	---
6	22GP2194A2	F900998	25.00	2500	12000	5.888	411	523	30	---	415	529	26	---	OK	74	85	71	77	---	---	---	---	---	---	---	---	---	---

Chemical Composition (%)

HEAT ANALYSIS	Heat No.	C	Mn	S	P	Si	Cr	Ni	Cu	Ti	V	Nb	Mo	Al	N	Ca	B	Nb+Ti+V	Cu+Ni	Cr+Mo+Cu+Ni	Al/N	CE**	Pcm
Specified Requirement	Min	---	---	---	---	---	---	---	---	---	---	---	---	---	---	---	---	---	---	---	---	---	---
	Max	0.220	1.600	0.020	0.025	0.550	---	---	---	---	---	---	---	0.020	---	---	---	---	---	---	---	---	---
	F900407	0.165	1.330	0.003	0.015	0.265	0.023	0.009	0.008	0.015	0.001	0.023	0.001	0.037	0.0049	0.0001	0.0004	0.039	0.017	0.041	7.55	0.39	0.24
	D900572	0.174	1.360	0.005	0.015	0.246	0.023	0.009	0.008	0.016	0.001	0.028	0.001	0.045	0.0038	0.0002	0.0003	0.045	0.017	0.041	11.84	0.41	0.25
	F900998	0.173	1.360	0.002	0.015	0.270	0.022	0.009	0.008	0.013	0.001	0.024	0.001	0.035	0.0036	0.0004	0.0004	0.038	0.017	0.040	9.72	0.41	0.25
	F900998	0.173	1.360	0.002	0.015	0.270	0.022	0.009	0.008	0.013	0.001	0.024	0.001	0.035	0.0036	0.0004	0.0004	0.038	0.017	0.040	9.72	0.41	0.25
	F900998	0.173	1.360	0.002	0.015	0.270	0.022	0.009	0.008	0.013	0.001	0.024	0.001	0.035	0.0036	0.0004	0.0004	0.038	0.017	0.040	9.72	0.41	0.25
	F900998	0.173	1.360	0.002	0.015	0.270	0.022	0.009	0.008	0.013	0.001	0.024	0.001	0.035	0.0036	0.0004	0.0004	0.038	0.017	0.040	9.72	0.41	0.25

PRODUCT ANALYSIS	Heat No.	C	Mn	S	P	Si	Cr	Ni	Cu	Ti	V	Nb	Mo	Al	N	Ca	B	Nb+Ti+V	Cu+Ni	Cr+Mo+Cu+Ni	Al/N	CE**	Pcm
Specified Requirement	Min	---	---	---	---	---	---	---	---	---	---	---	---	---	---	---	---	---	---	---	---	---	---
	Max	0.220	1.600	0.020	0.025	0.550	---	---	---	---	---	---	---	0.020	---	---	---	---	---	---	---	---	---
	F900407	0.163	1.315	0.003	0.015	0.261	0.023	0.009	0.008	0.015	0.001	0.023	0.001	0.036	0.0048	0.0001	0.0004	0.039	0.017	0.041	7.50	0.39	0.24
	D900572	0.171	1.346	0.005	0.015	0.242	0.023	0.009	0.008	0.016	0.001	0.028	0.001	0.044	0.0037	0.0002	0.0003	0.044	0.017	0.040	11.84	0.40	0.25
	F900998	0.170	1.346	0.002	0.015	0.265	0.022	0.009	0.008	0.013	0.001	0.024	0.001	0.034	0.0035	0.0004	0.0004	0.037	0.017	0.039	9.72	0.40	0.25
	F900998	0.170	1.346	0.002	0.015	0.265	0.022	0.009	0.008	0.013	0.001	0.024	0.001	0.034	0.0035	0.0004	0.0004	0.037	0.017	0.039	9.72	0.40	0.25
	F900998	0.170	1.346	0.002	0.015	0.265	0.022	0.009	0.008	0.013	0.001	0.024	0.001	0.034	0.0035	0.0004	0.0004	0.037	0.017	0.039	9.72	0.40	0.25
	F900998	0.170	1.346	0.002	0.015	0.265	0.022	0.009	0.008	0.013	0.001	0.024	0.001	0.034	0.0035	0.0004	0.0004	0.037	0.017	0.039	9.72	0.40	0.25

IT IS CERTIFIED THAT THE MATERIAL DESCRIBED ABOVE FULLY CONFIRM TO EN 10025-2:2019 & EQUIVALENT TO IS 2062:2011
CHEMICAL COMPOSITION & MECHANICAL PROPERTIES OF THE PRODUCT AS TESTED IN ACCORDANCE WITH THE SCHEME OF TESTING AND INSPECTION CONTAINED IN BIS CERTIFICATION MARKS LICENCE NO. CM/L-7945703 ARE AS INDICATED ABOVE
AGAINST EACH ORDER NO.
PLAESE REFER TO EN 10025-2:2019 & IS 2062:2011 FOR DETAILS OF SPECIFICATION REQUIREMENTS.

Note :
1) Test Certificate confirms to EN 10204:2004 Type 3.1
2) Process Route : SLAB (BOF-LHF-RH-CCM-Fully Killed(Al&Si Killed))-Hot Rolling.
3) Supply Condition : Normalized Rolled
4) Mechanical Properties are certified at Room Temperature unless specified.
5) Ultrasonic Test are satisfactory as per : ASTM A578 Level B
6) Dimensions are satisfactory as per EN10029:2010 Class A
7) Surface condition are satisfactory as per EN10163-2:2004,Class B,Subclass 1
8) Weight calculation for plates is as per Theoretical Calculation

Printed : 20.07.2022

Legend : YS : Yield Strength, UTS : Ultimate Tensile Strength, EL : % Elongation, RA : Reduction in Area, Thk : Thickness, NDTT : Nil Ductility Transition Test, Min : Minimum, Max : Maximum, NA: Not Applicable, S: Simulated Post-weld Heat Treatment Test,Sat : Satisfactory,WBBT-Weld bead bend test YS*=t≤16-355, 16<t≤40-345, 40<t≤63=335 ,CE**=0.47 for >30mm

VISHAL ENTERPRISE QA/QC

VISHAL ENTERPRISE

REVIEWED / NOTED / WITNESSED

Technical Inspection Services TÜV 697 India

20/08/2022

(Quality Assurance & Control Dept)

RAVINDRA PRAJAPATI

AUTHORISED SIGNATORY

Format No. : JSW/QAC/F/48 Rev.00

ADOR WELDING LIMITED
CREATING THE BEST WELDING EXPERIENCE

REGD. OFFICE: Ador House, 6, K. Dubhash Marg, Fort Mumbai - 400 001 | CIN: L70100MH1951PLC008647
1800 233 1071 care@adorians.com +91 20 40706000

ador peace of mind™

SILVASSA PLANT
Survey No. 59/11/1, Silvassa-Khanvel Road,
Masat, Silvassa - 396 230.
U.T. of Dadra & Nagar Haveli, India
Website : www.adorwelding.com

Test Certificate

Serial No. 3161154

SUPABASE X PLUS 3.15 x 450mm
AWS A/SFA 5.1 E7018 H4R

Date: 04 FEB 2022

Consumable	Batch No	Date of Manufacture
SMAW Electrode	62202006	FEB-2022

We certify that the supply made against this T.C. conforms to all requirements of ASME Section -II Part C-2021 in all respects.

CHEMICAL ANALYSIS : Tested in accordance with EN 10204, type 3.1

Elements	C%	Mn%	Si%	Cr%	Ni%	Mo%	Nb%	V%	W%	Cu%	Sn%	Fe%	S%	P%	Ti%	Zr%	Al%
Weld Metal	0.050	1.270	0.576	0.020	0.017	0.002	--	0.006	--	--	--	--	0.009	0.025	--	--	--

PHYSICAL PROPERTIES: All weld as welded condition.

Ultimate Tensile strength	Yield Strength at 0.2% Offset	Elongation L= 4 x d	Charpy V-Notch Impact Values at -30 °C	Hardness Test 3 Layers	Ferrite in Weld Deposit	Radiography
MPa (N/mm²)	MPa (N/mm²)	%	Joules	Brinell /Rc/Hv	%/FN	
558	472	26.5	54,62,66,60,58	170,175,175 BHN	--	Satisfactory

Remarks : H2 content per 100 g of weld metal = 3.24 ml by mercury method
Moisture content in the electrode coating = 0.15 %.

AWL-CONS-IMS-QCF-06/Rev.01

Officer (Q.A.)

Dept. Head (Q.A.)

QA/QC
29.08.2022

REVIEWED / NOTED
W/WITNESSED
20/02/2022
RAVINDRA PRAJAPATI

Technical Inspection Services TÜV India 697

ADOR WELDING LIMITED

CREATING THE BEST WELDING EXPERIENCE

REGD. OFFICE: Ador House, 6, K. Dubhash Marg, Fort Mumbai - 400 001 | CIN: L70100MH1951PLC008647
1800 233 1071 care@adorians.com +91 20 40706000

ador peace of mind™

SILVASSA PLANT
Survey No. 59/11/1, Silvassa-Khanvel Road,
Masat, Silvassa - 396 230.
U.T. of Dadra & Nagar Haveli, India
Website : www.adorwelding.com

TEST CERTIFICATE

Serial No.	3036807

SUPABASE-X-PLUS 4.00 x 450mm
AWS A/SFA 5.1 E7018

Date: 03 SEP 2021

Consumable	Batch No	Date of Manufacture
SMAW Electrode	62109010	SEP-2021

We certify that the supply made against this T.C. conforms to all requirements of ASME Section -II Part C-2019 in all respects

CHEMICAL ANALYSIS : Tested in accordance with EN 10204, type 3.1

Elements	C%	Mn%	Si%	Cr%	Ni%	Mo%	Nb%	V%	W%	Cu%	Sn%	Fe%	S%	P%	Ti%	Zr%	Al%
Weld Metal	0.040	1.170	0.550	0.030	0.013	0.001	--	0.005	--	--	--	--	0.010	0.020	--	--	--

PHYSICAL PROPERTIES: All weld as welded condition.

Ultimate Tensile strength	Yield Strength at 0.2% Offset	Elongation L= 4 x d	Charpy V-Notch Impact Values at -30 °C	Hardness Test 3 Layers	Ferrite in Weld Deposit	Radiography
MPa (N/mm^2)	MPa (N/mm^2)	%	Joules	Brinell /Rc/Hv	%/FN	
564	462	26.6	52,62,58,60,54	180,185,180BHN	--	Satisfactory

Remarks : Hydrogen Content per 100 gms of weld metal = 3.21 ml by mercury method
Moisture content in the electrode coating = 0.17 %.
Fillet weld tested and found satisfactory.

ADOR WELDING LIMITED QUALITY ASSURANCE DEPT. SILVASSA(INDIA)

REVIEWED / NOTED
.....%WITNESSED
29/08/2022
RAVINDRA PRAJAPATI
Technical Inspection Services TÜV 697 TÜV India

S. R. Ramon
Officer (Q.A.)

Dept. Head (Q.A.)

AWL-CONS-IMS-QCF-06/Rev.01

ADOR WELDING LIMITED

CREATING THE BEST WELDING EXPERIENCE

REGD. OFFICE: Ador House, 6, K. Dubhash Marg, Fort Mumbai - 400 001 | CIN: L70100MH1951PLC008647
1800 233 1071 care@adorians.com +91 20 40706000

ador peace of mind™

SILVASSA PLANT
Survey No. 59/11/1, Silvassa-Khanvel Road,
Masat, Silvassa - 396 230.
U.T. of Dadra & Nagar Haveli, India
Website : www.adorwelding.com

Test Certificate

Serial No.	3161273

SUPABASE X PLUS 2.50 x 350mm
AWS A/SFA 5.1 E7018 H4R

Date: 04 FEB 2022

Consumable	Batch No	Date of Manufacture
SMAW Electrode	62202010	FEB-2022

We certify that the supply made against this T.C. conforms to all requirements of ASME Section -II Part C-2021 in all respects.

CHEMICAL ANALYSIS : Tested in accordance with EN 10204, type 3.1

Elements	C%	Mn%	Si%	Cr%	Ni%	Mo%	Nb%	V%	W%	Cu%	Sn%	Fe%	S%	P%	Ti%	Zr%	Al%
Weld Metal	0.048	1.410	0.630	0.028	0.020	0.002	--	0.007	--	--	--	--	0.009	0.025	--	--	--

PHYSICAL PROPERTIES: All weld as welded condition.

Ultimate Tensile strength	Yield Strength at 0.2% Offset	Elongation L= 4 x d	Charpy V-Notch Impact Values at -30 °C	Hardness Test 3 Layers	Ferrite in Weld Deposit	Radiography
MPa (N/mm^2)	MPa (N/mm^2)	%	Joules	Brinell /Rc/Hv	%/FN	
554	468	26.5	52,58,66,60,56	175,175,180BHN	--	Satisfactory

Remarks : Hydrogen content per 100 g of weld metal = 3.26 ml by mercury method
Moisture content in the electrode coating = 0.15 %.

REVIEWED / NOTED
.....% WITNESSED
29/08/2022
RAVINDRA PRAJAPATI

ADOR WELDING LIMITED QUALITY ASSURANCE DEPT. SILVASSA (INDIA)

VALENTER RISE QA/QC 29.08.2022

AWL-CONS-IMS-QCF-06/Rev.01

Officer (Q.A.)

Dept. Head (Q.A.)

VISHAL ENTERPRISE & VRISHAL ENGINEERING PVT.LTD. GROUP OF COMPANIES

WELDING PROCEDURE SPECIFICATION

(As per AWS D1.1)

WELDING PROCEDURE SPEC. NO. : VEPL/WPS/006	**REV NO. 01**	**DATE : 23.12.2024**
SUPPORTING PQR NO.: VEPL/PQR/006	**REV NO. 00**	**DATE : 08.09.2022**
WELDING PROCESS: FCAW	**TYPE: SEMI-AUTOMATIC**	

JOINT DESIGN	
GROOVE DESIGN	***AS PER APPROVED AFC DRAWING (For PQR : Single V)***
BACKING	NO FOR ROOT / YES FOR REST
BACKING MATERIAL	BASE / WELD METAL
ROOT SPACING	3 - 4 mm
ROOT FACE	1-2 mm
GROOVE ANGLE	***AS PER APPROVED DRAWING / WELD BOOK***
BASE METALS	
MATERIAL SPEC. & GROUP	IS2062 E350 Gr.BR/C, or IS2062 R250 Gr. BO/BR/A or Equivalent
TEST PLATE THICKNESS	25 mm
QUALIFIED THICKNESS	3 mm to Unlimited
FILLET	Any

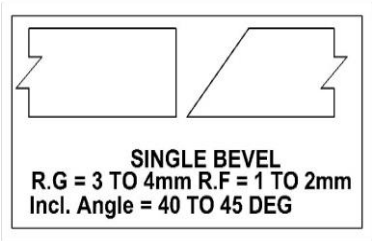

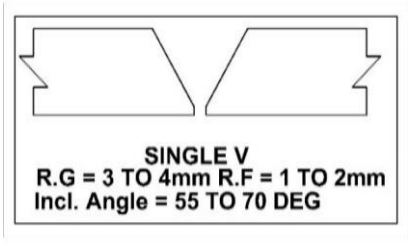

NOTE: WELD DESIGN WILL BE CONSIDERED AS PER THE APPROVED DRAWINGS ONLY.

FILLER METALS	
AWS SPECIFICATIONS	SFA 5.20
AWS CLASSFICATION	E71T-1C

POSITION	
PQR TEST PLATE POSITION	2G,3G & 4G
QUALIFIED POSITION FOR GROOVE	ALL
VERTICAL PROGRESSION	UPHILL

POST WELD HEAT TREATMENT
NA

SHIELDING GAS	
TYPE OF GAS	CO2
COMPOSITION	100%
FLOW RATE (LPM)	10-20
GAS CUP SIZE	NA

ELECTRICAL CHARACTERISTICS	
TRANSFER MODE(GMAW)	NA
SHORT CIRCUITING	NA
CURRENT	DC
POLARITY	DCEP
OTHER	NA

PREHEAT/INTERPASS TEMPERATURE (As per table 5.8 of AWS D1.1)		
THICKNESS	≤ 38	>38 to 65
PREHEAT TEMPERATURE	10°C	65°C
INTERPASS TEMPERATURE, Max.	**250°C**	

PREHEAT METHOD
PREHEAT SHALL BE CHECKED AT A DISTANCE OF 3" OR 3 TIMES THE THICKNESS WHICHEVER IS GREATER FROM THE WELD TOE AND THROUGH THE THICKNESS

TECHNIQUE	
STRING OR WEAVE BEAD	STRING / WEAVING
MULTIPASS OR SINGLE PASS	MULTIPASS
NUMBER OF ELECTRODE	SIGNLE
CONTACT TUBE TO WORK DISTANCE	15-25 mm
PEENING	NA
INTERPASS CLEANING	GRIND / WIRE BRUSHING
TACK WELD TECHNIQUE	SAME AS WITH ROOT PASS
TACK LENGTH	REFER NOTE 1

PASS OR WELD LAYER	WELDING PROCESS	FILLER METALS		CURRENT		VOLTS (V)	ELECTRODE RUNOUT LENGTH MINIMUM (mm)	TRAVEL SPEED mm/min (Min.)	HEAT INPUT kJ / mm (Max.)
		CLASS	DIA. mm	TYPE OF POLARITY	AMPS				
ROOT PASS / BACK CHIP	FCAW	E71T-1C	1.20	DCEP	130-200	20-30	50	100-180	2.5
HOT PASS	FCAW	E71T-1C	1.20	DCEP	130-200	20-30	50	100-180	2.5
FILL UP	FCAW	E71T-1C	1.20	DCEP	130-220	20-30	50	120-180	2.5
CAPPING	FCAW	E71T-1C	1.20	DCEP	130-220	20-30	50	120-180	2.5

NOTE :
1) 50 mm OR 4 times the thickness whichever is less, with a min. throat size of 6mm - 2 Pass maximum
2) Pre-heating shall be strictly followed for tacking also
3) Weaving should not exceed 2.5 times of electrode

	PREPARED BY	APPROVED BY
NAME	SHIVANG DIWAKAR	HARDIK PRAJAPATI
SIGNATURE	VISHAL ENTERPRISE QA/QC	VISHAL ENTERPRISE QA/QC
DATE	23.12.2024	23.12.2024

PROCEDURE QUALIFICATION RECORD (PQR)

Organization Name : VISHAL ENTERPRISE AND VRISHAL ENGINEERING PVT. LTD. GROUP OF COMPANIES

Procedure Qualification Record No : VEPL/PQR/006 Rev.0 | Date : 08.09.2022

PWPS No : VEPL/PWPS/006 REV.02

Welding Process (es) : FCAW

Types (Manual, Automatic, Semi Automatic) : SEMI AUTOMATIC

Joints

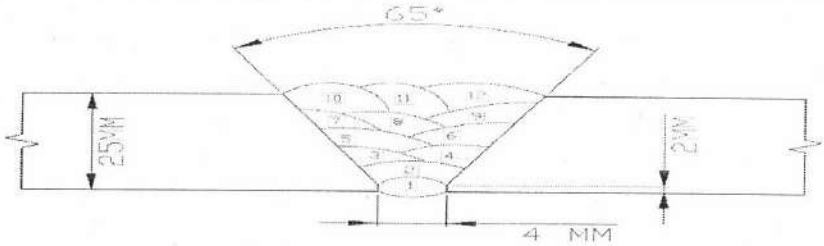

Base Metals		**Preheat**	
Material Spec.	IS 2062	Preheat Temp.	25°C
Types of Grades, or UNS number	E350 GR.C	Interpass Temp.	213°C Max.
		Post Heating Temp.	NA
Thickness of Test coupon	25 mm		
Size of Test Coupo	500 mm X 300 mm	**Post Weld Heat Treatment**	
Others	None	Temperature	NA
		Time	NA

Filler Metals		**GAS**			
Welding Process	FCAW		Gas (es)	(Mixture)	Flow Rate
SFA Specification	SFA 5.20	Shielding	CO_2	100%	14-16 LPM
AWS classification	E71T-1C	Trailing	None	None	None
Filler Metal F No.	6	Back / Purging	None	None	None
Weld Metal Analysis A No.	1	Others	None	None	None
Size Of Consumable	1.2 mm				
Filler Metal Product form	Flux Cored				
With and without Filler metal	Without	**Electrial Characteristics**			
Supplemental Filler Metal	NA		FCAW		
Electrode flux classification	-	Current :	Direct		
Flux Type	-	Polarity:	DCEP		
Flux Trade name	-				
Weld Metal Thickness	28 mm	Amps :	As per Running Sheet		
Others	-	Tungsten electrode Size :	-		
		Heat Input	As per Running Sheet		

Position		**Technique**	
Position for Groove	2G , 3G & 4G	Travel Speed	As per Running Sheet
Weld Progression	Uphill	String or Weave bead	Weave
Others	None	Method of cleaning	Wire Brusing / Buffing / Chipping
		Oscillation	NA
		Method of Back Gouging	NA
		Multipass or Single pass	Multiple
		Single or Multiple Electrodes	Single

	VISHAL	CLEINT / TPIA
SIGN		REVIEWED / NOTED ..... %WITNESSED
NAME	HARDIK PRAJAPATI	
DATE	08.09.2022	08/09/2022 VINAY DESHMUKH

VISHAL ENTERPRISE QA/QC

PROCEDURE QUALIFICATION RECORD (PQR)

Organization Name : VISHAL ENTERPRISE AND VRISHAL ENGINEERING PVT. LTD. GROUP OF COMPANIES

Procedure Qualification Record No : VEPL/PQR/006 Rev.0 | Date : 08.09.2022

PWPS No : VEPL/PWPS/006 REV.02

Welding Process (es) : FCAW

Types (Manual, Automatic, Semi Automatic) : SEMI AUTOMATIC

Tensile test - AWS D1.1 2020 for 2G Position (TC No. E2824)

SR. No.	Width (mm)	Thickness (mm)	Area (mm2)	Ultimate Total Load (N)	Ultimate Unit Stress (Mpa)	Broken From	Fracture
E2824ts1	20.12	25.05	504.00	286026	567.50	Parent	Ductile
E2824ts2	20.24	25.02	506.40	287586	567.40	Parent	Ductile

Tensile test - AWS D1.1 2020 for 3G Position (TC No. E2825)

SR. No.	Width (mm)	Thickness (mm)	Area (mm2)	Ultimate Total Load (N)	Ultimate Unit Stress (Mpa)	Broken From	Fracture
E2825ts1	20.07	24.79	497.53	290538	583.95	Parent	Ductile
E2825ts2	20.11	24.83	499.23	294888	590.56	Parent	Ductile

Tensile test - AWS D1.1 2020 for 4G Position (TC No. E2826)

SR. No.	Width (mm)	Thickness (mm)	Area (mm2)	Ultimate Total Load (N)	Ultimate Unit Stress (Mpa)	Broken From	Fracture
E2826ts1	20.10	24.36	489.63	289524	591.30	Parent	Ductile
E2826ts2	20.17	24.51	494.36	290736	588.09	Parent	Ductile

Bend test E2821be - AWS D1.1 2020 for 2G Position (TC No. E2824)

SR. No.	Sample Thickness (mm)	Mandrel Dia. (mm)	Angle of Bend (degree)	Observation
Side bend 1	10	38	180	Found Satisfactory
Side bend 2	10	38	180	Found Satisfactory
Side bend 3	10	38	180	Found Satisfactory
Side bend 4	10	38	180	Found Satisfactory

Bend test E2822be - AWS D1.1 2020 for 3G Position (TC No. E2825)

SR. No.	Sample Thickness (mm)	Mandrel Dia. (mm)	Angle of Bend (degree)	Observation
Side bend 1	10	38	180	Found Satisfactory
Side bend 2	10	38	180	Found Satisfactory
Side bend 3	10	38	180	Found Satisfactory
Side bend 4	10	38	180	Found Satisfactory

Bend test E2823be - AWS D1.1 2020 for 4G Position (TC No. E2826)

SR. No.	Sample Thickness (mm)	Mandrel Dia. (mm)	Angle of Bend (degree)	Observation
Side bend 1	10	38	180	Found Satisfactory
Side bend 2	10	38	180	Found Satisfactory
Side bend 3	10	38	180	Found Satisfactory
Side bend 4	10	38	180	Found Satisfactory

	VISHAL	CLEINT / TPIA
SIGN	VISHAL ENTERPRISE QA/QC	WITNESSED / NOTED WITNESSED 08/09/2022 VINAY DESHMUKH
NAME	HARDIK PRAJAPATI	
DATE	08.09.2022	

PROCEDURE QUALIFICATION RECORD (PQR)

Organization Name : VISHAL ENTERPRISE AND VRISHAL ENGINEERING PVT. LTD. GROUP OF COMPANIES

Procedure Qualification Record No : VEPL/PQR/006 Rev.0 | Date : 08.09.2022

PWPS No : VEPL/PWPS/006 REV.02

Welding Process (es) : FCAW

Types (Manual, Automatic, Semi Automatic) : SEMI AUTOMATIC

All Weld Tensile Test - AWS D1.1 2020

Identification	2G Position (TC No. E2824ts3)	3G Position (TC No. E2825ts3)	4G Position (TC No. E2826ts3)
SR.NO	E2824ts3	E2825ts3	E2826ts3
Width (mm)	12.49	12.70	12.50
Area (mm2)	122.52	126.68	122.72
0.2% Proof Load (N)	62365	67302	66027
0.2% Proof Stress (Mpa)	509.01	531.27	538.02
Ultimate Load (N)	70440	77880	71124
Ultimate Tensile Strength (Mpa)	574.92	614.77	579.57
Guage Length (mm)	50.00	50.00	50.00
Final Guage Length (mm)	62.90	64.5	62.70
Elongation (%)	25.8	29.00	25.40
Sample Broken From	WGL	WGL	WGL

Macro-Etch

TC No.	Removal Location	Observation	Test Result	
			Accept	Reject
E2824ma	Cross Section of Weld	Complete Fusion and Free from Crack	X	-
E2825ma	Cross Section of Weld	Complete Fusion and Free from Crack	X	-
E2826ma	Cross Section of Weld	Complete Fusion and Free from Crack	X	-

Other Test

Type	Required By		Test Result		TC No.
	CODE	Test Method	Accept	Reject	
Hardness @ HV10	AWS D1.1	ASTM E92-17	X	-	E2824ha , E2825ha & E2826ha
Charpy Impact @ -20°C	AWS D1.1	ASTM A370-21	X	-	E2824cv , E2825cv & E2826cv

Welder's Name :	ASWINI KUMAR	WELDER NO	S-AB13
Test Conducted By	GLOBAL METALLURGICAL SERVICES		
Test Witnessed By	TUV NORD		
Radiography Test Report No.	VE/ITT/RT/PQR/04		
Tensile & Bend test Report No.	E2824 , E2825 & E2826		
All Weld Tensile Test Report No.	E2824ts3 , E2825ts3 & E2826ts3		
Macro Examination Report No.	E2824ma , E2825ma & E2826ma		
Hardness Test Report No.	E2824ha , E2825ha & E2826ha		
Impact Test Report No.	E2824cv , E2825cv & E2826cv		
Visual Examination Report No.	VE/ITT/PQR/WV/02		

We certify that the statements in this record are correct and that the test welds were prepared, welded, tested in accordance with the requirements of AWS D1.1:2020 and Project Specification

Organization: Vishal Enterprise
By Hardik Prajapati
Date : 08.09.2022

	VISHAL	CLEINT / TPIA
SIGN		REVIEWED / NOTED ....%WITNESSED
NAME	HARDIK PRAJAPATI	VINAY DESHMUKH
DATE	08.09.2022	08/09/2022

VISHAL ENTERPRISE QA/QC

GLOBAL METALLURGICAL SERVICES

(NABL Accredited Laboratory as per ISO/IEC 17025 : 2017)

Chemical Analysis | Mechanical Testing | Metallurgical Testing | Corrosion Testing | Site Services

TC-8362

Test Report

Name & Add. Of Customer	VISHAL ENTERPRISE D-2/E, 397-398, DAHEJ G.I.D.C, JOLWA, BHARUCH – 392 130.	**TC No.:** E2824 **ULR No.:** TC836222000005290F **Date of Issue:** 08.09.2022
Type of Test	Tensile Test/ Bend Test	**Page:** 1 of 1
Instrument Utilised	GMS-TM-03	**Location:** At Laboratory
Customer Ref.	Delivery Challan and Packing List: VE/2154, Date: 31.08.2022	
Sample received on	01.09.2022	
Nature of sample	Welded Plate Sample	**Condition of sample:** Satisfactory
Sample Size(mm)	500 mm X 300 mm X 25 mm Thk	**Sample Drawn by:** Party, Stamped by "TUV INDIA"
Specification	IS 2062 GRADE E350 QUALITY C	**Test Completed on:** 07.09.2022
Sample ID	Project Name: EN202775 LA PORTE HYCO4, Client Name: ITT Engineering India Pvt. Ltd., Identification – VEPL/PQR/006-2G	

Results

Discipline – Mechanical Testing

Group – Ferrous material & its Alloys

Tensile Test – E2824ts			Test Method – AWS D1.1: 2020										
Sr. No. / Location		Width (mm)	Thickness (mm)	Cross Section Area (mm²)	Yield Load (N)	Yield Strength (MPa)	Ultimate Load (N)	Ultimate Tensile Strength (MPa)	Gauge Length (mm)	Final Gauge Length (mm)	Elongation (%)	Reduction Dia. (mm)	Reduction of Area (%)
--	Req.	--	--	--	--	--	--	490 Min	--	--	--	--	--
--	U of M (±)	--	--	--	--	--	--	5.02	--	--	--	--	--
E2824ts1	Obs.	20.12	25.05	504.00	--	--	286026	567.50	--	--	--	--	--
E2824ts2	Obs.	20.24	25.02	506.40	--	--	287586	567.40	--	--	--	--	--
Sample Broken From – Parent (Ductile Fracture)													

Bend Test – E2824be	Test Method – AWS D1.1: 2020			
Sr. No.	Side Bend 1	Side Bend 2	Side Bend 3	Side Bend 4
Sample Thickness (mm)	10	10	10	10
Mandrel Dia. (mm)	38	38	38	38
Angle of bend (degree)	180	180	180	180
Observation	Found Satisfactory	Found Satisfactory	Found Satisfactory	Found Satisfactory

Remarks – The Offered Sample complying Requirement of AWS D1.1: 2020 based on Reported Results ± U.O.M Within Permissible Limits.

Tested By	Reviewed & Authorized Signatory Amit Meghani	Witnessed By

- The Sample was not drawn by Laboratory.
- The above test reports relate only to sample submitted / tested.
- Test Reports Shall not be reproduced except in full, without written permission of laboratory.

Form – 20 R. 03

End of Test Report

254/I, Industrial Lining, G.I.D.C., Makarpura, Vadodara - 390 010.

Call : 7490934252 Email : globallab17@gmail.com ● Website : www.globallaboratory.in

Test Report

Name & Add. Of Customer	VISHAL ENTERPRISE D-2/E, 397-398, DAHEJ G.I.D.C, JOLWA, BHARUCH – 392 130.	**TC No.:** E2825 **ULR No.:** TC836222000005291F **Date of Issue:** 08.09.2022
Type of Test	Tensile Test/ Bend Test	**Page:** 1 of 1
Instrument Utilised	GMS-TM-03	**Location:** At Laboratory
Customer Ref.	Delivery Challan and Packing List: VE/2154, Date: 31.08.2022	
Sample received on	01.09.2022	
Nature of sample	Welded Plate Sample	**Condition of sample:** Satisfactory
Sample Size(mm)	500 mm X 300 mm X 25 mm Thk	**Sample Drawn by:** Party, Stamped by "TUV INDIA"
Specification	IS 2062 GRADE E350 QUALITY C	**Test Completed on:** 07.09.2022
Sample ID	Project Name: EN202775 LA PORTE HYCO4, Client Name: ITT Engineering India Pvt. Ltd., Identification – VEPL/PQR/006-3G	

Results

Discipline – Mechanical Testing

Group – Ferrous material & its Alloys

Tensile Test – E2825ts			Test Method – AWS D1.1: 2020										
Sr. No. / Location		Width (mm)	Thickness (mm)	Cross Section Area (mm²)	Yield Load (N)	Yield Strength (MPa)	Ultimate Load (N)	Ultimate Tensile Strength (MPa)	Gauge Length (mm)	Final Gauge Length (mm)	Elongation (%)	Reduction Dia. (mm)	Reduction of Area (%)
--	Req.	--	--	--	--	--	--	490 Min	--	--	--	--	--
--	U of M (±)	--	--	--	--	--	--	5.02	--	--	--	--	--
E2825ts1	Obs.	20.07	24.79	497.53	--	--	290538	583.95	--	--	--	--	--
E2825ts2	Obs.	20.11	24.83	499.23	--	--	294888	590.56	--	--	--	--	--
Sample Broken From – Parent (Ductile Fracture)													

Bend Test – E2825be	Test Method – AWS D1.1: 2020			
Sr. No.	Side Bend 1	Side Bend 2	Side Bend 3	Side Bend 4
Sample Thickness (mm)	10	10	10	10
Mandrel Dia. (mm)	38	38	38	38
Angle of bend (degree)	180	180	180	180
Observation	Found Satisfactory	Found Satisfactory	Found Satisfactory	Found Satisfactory

Remarks – The Offered Sample complying Requirement of AWS D1.1: 2020 based on Reported Results ± U.O.M Within Permissible Limits.

Tested By	**Reviewed & Authorized Signatory** **Amit Meghani**	**Witnessed By**

- The Sample was not drawn by Laboratory.
- The above test reports relate only to sample submitted / tested.
- Test Reports Shall not be reproduced except in full, without written permission of laboratory.

Form – 20 R. 03

End of Test Report

Test Report

Name & Add. Of Customer	VISHAL ENTERPRISE D-2/E, 397-398, DAHEJ G.I.D.C, JOLWA, BHARUCH – 392 130.	**TC No.:** E2826 **ULR No.:** TC836222000005292F **Date of Issue:** 08.09.2022
Type of Test	Tensile Test/ Bend Test	**Page:** 1 of 1
Instrument Utilised	GMS-TM-03	**Location:** At Laboratory
Customer Ref.	Delivery Challan and Packing List: VE/2154, Date: 31.08.2022	
Sample received on	01.09.2022	
Nature of sample	Welded Plate Sample	**Condition of sample:** Satisfactory
Sample Size(mm)	500 mm X 300 mm X 25 mm Thk	**Sample Drawn by:** Party, Stamped by "TUV INDIA"
Specification	IS 2062 GRADE E350 QUALITY C	**Test Completed on:** 07.09.2022
Sample ID	Project Name: EN202775 LA PORTE HYCO4, Client Name: ITT Engineering India Pvt. Ltd., Identification – VEPL/PQR/006-4G	

Results

Discipline – Mechanical Testing

Group – Ferrous material & its Alloys

Tensile Test – E2826ts | Test Method – AWS D1.1: 2020

Sr. No. / Location		Width (mm)	Thickness (mm)	Cross Section Area (mm²)	Yield Load (N)	Yield Strength (MPa)	Ultimate Load (N)	Ultimate Tensile Strength (MPa)	Gauge Length (mm)	Final Gauge Length (mm)	Elongation (%)	Reduction Dia. (mm)	Reduction of Area (%)
--	Req.	--	--	--	--	--	--	490 Min	--	--	--	--	--
--	U of M (±)	--	--	--	--	--	--	5.02	--	--	--	--	--
E2826ts1	Obs.	20.10	24.36	489.63	--	--	289524	591.30	--	--	--	--	--
E2826ts2	Obs.	20.17	24.51	494.36	--	--	290736	588.09	--	--	--	--	--

Sample Broken From – Parent (Ductile Fracture)

Bend Test – E2826be | Test Method – AWS D1.1: 2020

Sr. No.	Side Bend 1	Side Bend 2	Side Bend 3	Side Bend 4
Sample Thickness (mm)	10	10	10	10
Mandrel Dia. (mm)	38	38	38	38
Angle of bend (degree)	180	180	180	180
Observation	Found Satisfactory	Found Satisfactory	Found Satisfactory	Found Satisfactory

Remarks – The Offered Sample complying Requirement of AWS D1.1: 2020 based on Reported Results ± U.O.M Within Permissible Limits.

Tested By	Reviewed & Authorized Signatory Amit Meghani	Witnessed By

- The Sample was not drawn by Laboratory.
- The above test reports relate only to sample submitted / tested.
- Test Reports Shall not be reproduced except in full, without written permission of laboratory.

Form – 20 R. 03

End of Test Report

Test Report

Name & Add. Of Customer	VISHAL ENTERPRISE D-2/E, 397-398, DAHEJ G.I.D.C, JOLWA, BHARUCH – 392 130.	**TC No.:** E2824ts3 **ULR No.:** TC836222000005302F **Date of Issue:** 08.09.2022
Type of Test	Tensile Test	**Page:** 1 of 1
Instrument Utilised	GMS-TM-03	**Location:** At Laboratory
Customer Ref.	Delivery Challan and Packing List: VE/2154, Date: 31.08.2022	
Sample received on	01.09.2022	
Nature of sample	Welded Plate Sample	**Condition of sample:** Satisfactory
Sample Size(mm)	500 mm X 300 mm X 25 mm Thk	**Sample Drawn by:** Party, Stamped by "TUV INDIA"
Specification	IS 2062 GRADE E350 QUALITY C	**Test Completed on:** 07.09.2022
Sample ID	Project Name: EN202775 LA PORTE HYCO4, Client Name: ITT Engineering India Pvt. Ltd., Identification – VEPL/PQR/006-2G	

Results

Discipline – Mechanical Testing

Group – Ferrous material & its Alloys

All Weld Tensile Test – E2824ts3 | Test Method – AWS D1.1: 2020

Sr. No. / Location		Gauge Dia. (mm)	Thickness (mm)	Cross Section Area (mm²)	0.2% Proof Load (N)	0.2% Proof Stress (MPa)	Ultimate Load (N)	Ultimate Tensile Strength (MPa)	Gauge Length (mm)	Final Gauge Length (mm)	Elongation (%)	Reduction Dia. (mm)	Reduction of Area (%)
--	Req.	--	--	--	--	--	--	--	--	--	22 Min	--	--
--	U of M (±)	--	--	--	--	--	--	--	--	--	0.34	--	--
E2824ts3	Obs.	12.49	--	122.52	62365	509.01	70440	574.92	50.00	62.90	25.80	--	--
Approx. conversion into Ksi													
--	--	--	--	--	--	58 Ksi Min	--	70 - 95 Ksi	--	--	--	--	--
E2824ts3	--	--	--	--	--	73.82	--	83.38	--	--	--	--	--

Sample Broken From –W.G.L.

VISHAL ENTERPRISE QC

Remarks – The Offered Sample complying Requirement Client based on Reported Results ± U.O.M Within Permissible Limits.

Tested By	Reviewed & Authorized Signatory Amit Meghani	Witnessed By

GLOBAL METALLURGICAL SERVICES VADODARA

TUV Technical Inspection Services 450

08/09/2022

- The Sample was not drawn by Laboratory.
- The above test reports relate only to sample submitted / tested.
- Test Reports Shall not be reproduced except in full, without written permission of laboratory.

Form – 20 R. 03

End of Test Report

Test Report

Name & Add. Of Customer	VISHAL ENTERPRISE D-2/E, 397-398, DAHEJ G.I.D.C, JOLWA, BHARUCH – 392 130.	**TC No.:** E2825ts3 **ULR No.:** TC836222000005303F **Date of Issue:** 08.09.2022
Type of Test	Tensile Test	**Page:** 1 of 1
Instrument Utilised	GMS-TM-03	**Location:** At Laboratory
Customer Ref.	Delivery Challan and Packing List: VE/2154, Date: 31.08.2022	
Sample received on	01.09.2022	
Nature of sample	Welded Plate Sample	**Condition of sample:** Satisfactory
Sample Size(mm)	500 mm X 300 mm X 25 mm Thk	**Sample Drawn by:** Party, Stamped by "TUV INDIA"
Specification	IS 2062 GRADE E350 QUALITY C	**Test Completed on:** 07.09.2022
Sample ID	Project Name: EN202775 LA PORTE HYCO4, Client Name: ITT Engineering India Pvt. Ltd., Identification – VEPL/PQR/006-3G	

Results

Discipline – Mechanical Testing

Group – Ferrous material & its Alloys

All Weld Tensile Test – E2825ts3			Test Method – AWS D1.1: 2020										
Sr. No. / Location		Gauge Dia. (mm)	Thickness (mm)	Cross Section Area (mm²)	0.2% Proof Load (N)	0.2% Proof Stress (MPa)	Ultimate Load (N)	Ultimate Tensile Strength (MPa)	Gauge Length (mm)	Final Gauge Length (mm)	Elongation (%)	Reduction Dia. (mm)	Reduction of Area (%)
--	Req.	--	--	--	--	--	--	--	--	--	22 Min	--	--
--	U of M (±)	--	--	--	--	--	--	--	--	--	0.34	--	--
E2825ts3	Obs.	12.70	--	126.68	67302	531.27	77880	614.77	50.00	64.50	29.00	--	--
Approx. conversion into Ksi													
--	--	--	--	--	--	58 Ksi Min	--	70 - 95 Ksi	--	--	--	--	--
E2825ts3	--	--	--	--	--	77.05	--	89.15	--	--	--	--	--
Sample Broken From –W.G.L.													

VISHAL ENTERPRISE QA/QC

Remarks – The Offered Sample complying Requirement of Client based on Reported Results ± U.O.M Within Permissible Limits.

Tested By	Reviewed & Authorized Signatory Amit Meghani	Witnessed By

GLOBAL METALLURGICAL SERVICES VADODARA

Technical Inspection Bureau TUV India 450 08/09/2022

- The Sample was not drawn by Laboratory.
- The above test reports relate only to sample submitted / tested.
- Test Reports Shall not be reproduced except in full, without written permission of laboratory.

Form – 20 R. 03

End of Test Report

Test Report

Name & Add. Of Customer	VISHAL ENTERPRISE D-2/E, 397-398, DAHEJ G.I.D.C, JOLWA, BHARUCH – 392 130.	**TC No.:** E2826ts3 **ULR No.:** TC836222000005304F **Date of Issue:** 08.09.2022
Type of Test	Tensile Test	**Page:** 1 of 1
Instrument Utilised	GMS-TM-03	**Location:** At Laboratory
Customer Ref.	Delivery Challan and Packing List: VE/2154, Date: 31.08.2022	
Sample received on	01.09.2022	
Nature of sample	Welded Plate Sample	**Condition of sample:** Satisfactory
Sample Size(mm)	500 mm X 300 mm X 25 mm Thk	**Sample Drawn by:** Party, Stamped by "TUV INDIA"
Specification	IS 2062 GRADE E350 QUALITY C	**Test Completed on:** 07.09.2022
Sample ID	Project Name: EN202775 LA PORTE HYCO4, Client Name: ITT Engineering India Pvt. Ltd., Identification – VEPL/PQR/006-4G, Test Coupon Size – 500 mm X 300 mm	

Results

Discipline – Mechanical Testing

Group – Ferrous material & its Alloys

All Weld Tensile Test – E2826ts3 | Test Method – AWS D1.1: 2020

Sr. No. / Location		Gauge Dia. (mm)	Thickness (mm)	Cross Section Area (mm²)	0.2% Proof Load (N)	0.2% Proof Stress (MPa)	Ultimate Load (N)	Ultimate Tensile Strength (MPa)	Gauge Length (mm)	Final Gauge Length (mm)	Elongation (%)	Reduction Dia. (mm)	Reduction of Area (%)
--	Req.	--	--	--	--	--	--	--	--	--	22 Min	--	--
--	U of M (±)	--	--	--	--	--	--	--	--	--	0.34	--	--
E2826ts3	Obs.	12.50	--	122.72	66027	538.02	71124	579.57	50.00	62.70	25.40	--	--
Approx. conversion into Ksi													
--	--	--	--	--	--	58 Ksi Min	--	70 - 95 Ksi	--	--	--	--	--
E2826ts3	--	--	--	--	--	78.03	--	84.05	--	--	--	--	--

Sample Broken From –W.G.L.

VISHAL ENTERPRISE QA/QC

Remarks – The Offered Sample complying Requirement of Client based on Reported Results ± U.O.M Within Permissible Limits.

Tested By	Reviewed & Authorized Signatory Amit Meghani	Witnessed By

GLOBAL METALLURGICAL SERVICES VADODARA

Technical Inspection Services TUV 450 08/09/2022

- The Sample was not drawn by Laboratory.
- The above test reports relate only to sample submitted / tested.
- Test Reports Shall not be reproduced except in full, without written permission of laboratory.

Form – 20 R. 03

End of Test Report

Test Report

Name & Add. Of Customer	VISHAL ENTERPRISE D-2/E, 397-398, DAHEJ G.I.D.C, JOLWA, BHARUCH – 392 130.	**TC No.**E2824ma **ULR :** --- **Date of Issue:** 07.09.2022
Type of Test	Macro Examination by stereo Microscope	**Page :** 1 of 1
Test Method	AWS D1.1: 2020	**Location :** At Laboratory
Instrument Utilised	GMS-TM-18	
Customer Ref.	Delivery Challan and Packing List: VE/2154, Date: 31.08.2022	
Sample received on	01.09.2022	
Nature of sample	Welded Plate Sample	**Condition of sample:** Satisfactory
Sample Size(mm)	500 mm X 300 mm X 25 mm Thk	**Sample Drawn by :** Party, Stamped by "TUV INDIA"
Specification	IS 2062 GRADE E350 QUALITY C	**Test Completed on :** 07.09.2022
Sample ID.	Project Name: EN202775 LA PORTE HYCO4, Client Name: ITT Engineering India Pvt. Ltd., Identification – VEPL/PQR/006-2G	

Results

Discipline – Mechanical Testing

Group – Ferrous and its alloy

Etchant : 10% Nital

Observation : Welding cross section Shows complete Fusion and free from cracks

VISHAL ENTERPRISE QA/QC

Remark	--

Tested By	Reviewed & Authorized Signatory Amit Meghani	Witnessed By
	GLOBAL METALLURGICAL SERVICES VADODARA	Technical Inspection Services TUV 450 TUV India 07/09/2022

- The Sample was not drawn by Laboratory.
- The above test reports relate only to sample submitted / tested.
- Test Reports Shall not be reproduced except in full, without written permission of laboratory.

Form – 20 R. 03

End of Test Report

GLOBAL METALLURGICAL SERVICES

(NABL Accredited Laboratory as per ISO/IEC 17025 : 2017)

Chemical Analysis I Mechanical Testing I Metallurgical Testing I Corrosion Testing I Site Services

Test Report

Name & Add. Of Customer	VISHAL ENTERPRISE D-2/E, 397-398, DAHEJ G.I.D.C, JOLWA, BHARUCH – 392 130.	**TC No.**E2825ma **ULR :** --- **Date of Issue:** 07.09.2022
Type of Test	Macro Examination by stereo Microscope	**Page :** 1 of 1
Test Method	AWS D1.1: 2020	**Location :** At Laboratory
Instrument Utilised	GMS-TM-18	
Customer Ref.	Delivery Challan and Packing List: VE/2154, Date: 31.08.2022	
Sample received on	01.09.2022	
Nature of sample	Welded Plate Sample	**Condition of sample:** Satisfactory
Sample Size(mm)	500 mm X 300 mm X 25 mm Thk	**Sample Drawn by :** Party, Stamped by "TUV INDIA"
Specification	IS 2062 GRADE E350 QUALITY C	**Test Completed on :** 07.09.2022
Sample ID.	Project Name: EN202775 LA PORTE HYCO4, Client Name: ITT Engineering India Pvt. Ltd., Identification – VEPL/PQR/006-3G	

Results

Discipline – Mechanical Testing

Group – Ferrous and its alloy

Etchant : 10% Nital

Observation : Welding cross section Shows complete Fusion and free from cracks

VISHAL ENTERPRISE QA/QC

Remark	--

Tested By	Reviewed & Authorized Signatory Amit Meghani	Witnessed By
	GLOBAL METALLURGICAL SERVICES VADODARA	Technical Inspection Services TUV 450 TUV India 07/09/2022 IVIJ DESAI

- The Sample was not drawn by Laboratory.
- The above test reports relate only to sample submitted / tested.
- Test Reports Shall not be reproduced except in full, without written permission of laboratory.

Form – 20 R. 03

End of Test Report

GLOBAL METALLURGICAL SERVICES

(NABL Accredited Laboratory as per ISO/IEC 17025 : 2017)

Chemical Analysis I Mechanical Testing I Metallurgical Testing I Corrosion Testing I Site Services

Test Report

Name & Add. Of Customer	VISHAL ENTERPRISE D-2/E, 397-398, DAHEJ G.I.D.C, JOLWA, BHARUCH – 392 130.	**TC No.**E2826ma **ULR :** --- **Date of Issue:** 08.09.2022
Type of Test	Macro Examination by stereo Microscope	**Page :** 1 of 1
Test Method	AWS D1.1: 2020	**Location :** At Laboratory
Instrument Utilised	GMS-TM-18	
Customer Ref.	Delivery Challan and Packing List: VE/2154, Date: 31.08.2022	
Sample received on	01.09.2022	
Nature of sample	Welded Plate Sample	**Condition of sample:** Satisfactory
Sample Size(mm)	500 mm X 300 mm X 25 mm Thk	**Sample Drawn by :** Party, Stamped by "TUV INDIA"
Specification	IS 2062 GRADE E350 QUALITY C	**Test Completed on :** 08.09.2022
Sample ID.	Project Name: EN202775 LA PORTE HYCO4, Client Name: ITT Engineering India Pvt. Ltd., Identification – VEPL/PQR/006-4G	

Results

Discipline – Mechanical Testing

Group – Ferrous and its alloy

Etchant : 10% Nital

Observation : Welding cross section Shows complete Fusion and free from cracks

VISHAL ENTERPRISE QA/QC

Remark	--

Tested By	Reviewed & Authorized Signatory Amit Meghani	Witnessed By

GLOBAL METALLURGICAL SERVICES VADODARA

Technical Inspection Services TUV 450 TUV India 08/09/2022

- The Sample was not drawn by Laboratory.
- The above test reports relate only to sample submitted / tested.
- Test Reports Shall not be reproduced except in full, without written permission of laboratory.

Form – 20 R. 03

End of Test Report

GLOBAL METALLURGICAL SERVICES

(NABL Accredited Laboratory as per ISO/IEC 17025 : 2017)

Chemical Analysis I Mechanical Testing I Metallurgical Testing I Corrosion Testing I Site Services

TC-8362

Test Report

Name & Add. Of Customer	VISHAL ENTERPRISE D-2/E, 397-398, DAHEJ G.I.D.C, JOLWA, BHARUCH – 392 130.	**TC No.:** E2824ha **ULR No.:** TC836222000005276F **Date of Issue:** 08.09.2022
Type of Test	Vickers Hardness Test	**Page:** 1 of 1
Instrument Utilised	GMS-TM-05	**Location:** At Laboratory
Customer Ref.	Delivery Challan and Packing List: VE/2154, Date: 31.08.2022	
Sample received on	01.09.2022	
Nature of sample	Welded Plate Sample	**Condition of sample:** Satisfactory
Sample Size(mm)	500 mm X 300 mm X 25 mm Thk	**Sample Drawn by:** Party, Stamped by "TUV INDIA"
Specification	IS 2062 GRADE E350 QUALITY C	**Test Completed on:** 07.09.2022 ✓
Sample ID	Project Name: EN202775 LA PORTE HYCO4, Client Name: ITT Engineering India Pvt. Ltd., Identification – VEPL/PQR/006- 2G	

Results

Discipline – Mechanical Testing,

Group – Ferrous material & its Alloys

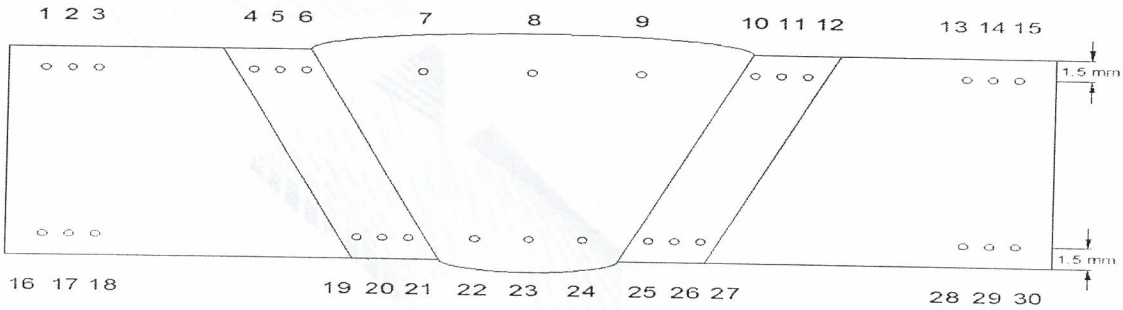

Vickers Hardness Test – E2824ha | Test Method – ASTM E92- 17 | (±)Expanded Uncertainty: --

Hardness Reading In HV at load 10 kgf

SR No	Area (TOP)	Observation (HV10)
1	PARENT	164
2	PARENT	161
3	PARENT	166
4	HAZ	205
5	HAZ	201
6	HAZ	202
7	Weld	178
8	Weld	181
9	Weld	177
10	HAZ	201
11	HAZ	199
12	HAZ	203
13	PARENT	162
14	PARENT	160
15	PARENT	168

SR No	Area (BOTTOM)	Observation (HV10)
16	PARENT	163
17	PARENT	167
18	PARENT	164
19	HAZ	195
20	HAZ	203
21	HAZ	205
22	Weld	180
23	Weld	182
24	Weld	181
25	HAZ	207
26	HAZ	205
27	HAZ	203
28	PARENT	168
29	PARENT	166
30	PARENT	163

VISHAL ENTERPRISE

Remarks: Observation. Results to be evaulated

Tested By	Reviewed & Authorized Signatory Amit Meghani	Witnessed By 08/09/2022

- The Sample was not drawn by Laboratory.
- The above test reports relate only to sample submitted / tested.
- Test Reports Shall not be reproduced except in full, without written permission of laboratory.

Form – 20 R. 03

End of Test Report

254/I, Industrial Lining, G.I.D.C., Makarpura, Vadodara - 390 010.
Call : 7490934252 Email : globallab17@gmail.com ● Website : www.globallaboratory.in

GLOBAL METALLURGICAL SERVICES

(NABL Accredited Laboratory as per ISO/IEC 17025 : 2017)

Chemical Analysis | Mechanical Testing | Metallurgical Testing | Corrosion Testing | Site Services

TC-8362

Test Report

Name & Add. Of Customer	VISHAL ENTERPRISE D-2/E, 397-398, DAHEJ G.I.D.C, JOLWA, BHARUCH – 392 130.	**TC No.:** E2825ha **ULR No.:** TC836222000005277F **Date of Issue:** 08.09.2022
Type of Test	Vickers Hardness Test	**Page:** 1 of 1
Instrument Utilised	GMS-TM-05	**Location:** At Laboratory
Customer Ref.	Delivery Challan and Packing List: VE/2154, Date: 31.08.2022	
Sample received on	01.09.2022	
Nature of sample	Welded Plate Sample	**Condition of sample:** Satisfactory
Sample Size(mm)	500 mm X 300 mm X 25 mm Thk	**Sample Drawn by:** Party, Stamped by "TUV INDIA"
Specification	IS 2062 GRADE E350 QUALITY C	**Test Completed on:** 07.09.2022 ✓
Sample ID	Project Name: EN202775 LA PORTE HYCO4, Client Name: ITT Engineering India Pvt. Ltd., Identification – VEPL/PQR/006- 3G	

Results

Discipline – Mechanical Testing,

Group – Ferrous material & its Alloys

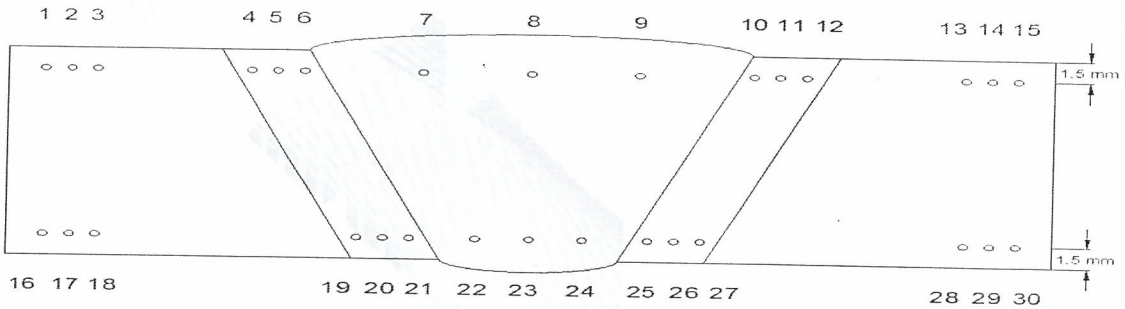

Vickers Hardness Test – E2825ha | Test Method – ASTM E92- 17 | (±)Expanded Uncertainty: --

Hardness Reading In HV at load 10 kgf

SR No	Area (TOP)	Observation (HV10)
1	PARENT	166
2	PARENT	163
3	PARENT	161
4	HAZ	195
5	HAZ	198
6	HAZ	199
7	Weld	192
8	Weld	189
9	Weld	187
10	HAZ	205
11	HAZ	194
12	HAZ	201
13	PARENT	168
14	PARENT	165
15	PARENT	163

SR No	Area (BOTTOM)	Observation (HV10)
16	PARENT	161
17	PARENT	168
18	PARENT	166
19	HAZ	193
20	HAZ	199
21	HAZ	201
22	Weld	194
23	Weld	193
24	Weld	189
25	HAZ	202
26	HAZ	201
27	HAZ	198
28	PARENT	162
29	PARENT	163
30	PARENT	166

Remarks: observation. Results to be evaulated

Tested By	Reviewed & Authorized Signatory Amit Meghani	Witnessed By 08/09/2022 (Vij Desai)

- The Sample was not drawn by Laboratory.
- The above test reports relate only to sample submitted / tested.
- Test Reports Shall not be reproduced except in full, without written permission of laboratory.

End of Test Report

Form – 20 R. 03

254/I, Industrial Lining, G.I.D.C., Makarpura, Vadodara - 390 010.
Call : 7490934252 Email : globallab17@gmail.com ● Website : www.globallaboratory.in

GLOBAL METALLURGICAL SERVICES

(NABL Accredited Laboratory as per ISO/IEC 17025 : 2017)

Chemical Analysis | Mechanical Testing | Metallurgical Testing | Corrosion Testing | Site Services

TC-8362

Test Report

Name & Add. Of Customer	VISHAL ENTERPRISE D-2/E, 397-398, DAHEJ G.I.D.C, JOLWA, BHARUCH – 392 130.	**TC No.:** E2826ha **ULR No.:** TC836222000005278F **Date of Issue:** 08.09.2022
Type of Test	Vickers Hardness Test	**Page:** 1 of 1
Instrument Utilised	GMS-TM-05	**Location:** At Laboratory
Customer Ref.	Delivery Challan and Packing List: VE/2154, Date: 31.08.2022	
Sample received on	01.09.2022	
Nature of sample	Welded Plate Sample	**Condition of sample:** Satisfactory
Sample Size(mm)	500 mm X 300 mm X 25 mm Thk	**Sample Drawn by:** Party, Stamped by "TUV INDIA"
Specification	IS 2062 GRADE E350 QUALITY C.	**Test Completed on:** 07.09.2022
Sample ID	Project Name: EN202775 LA PORTE HYCO4, Client Name: ITT Engineering India Pvt. Ltd., Identification – VEPL/PQR/006- 4G	

Results

Discipline – Mechanical Testing,

Group – Ferrous material & its Alloys

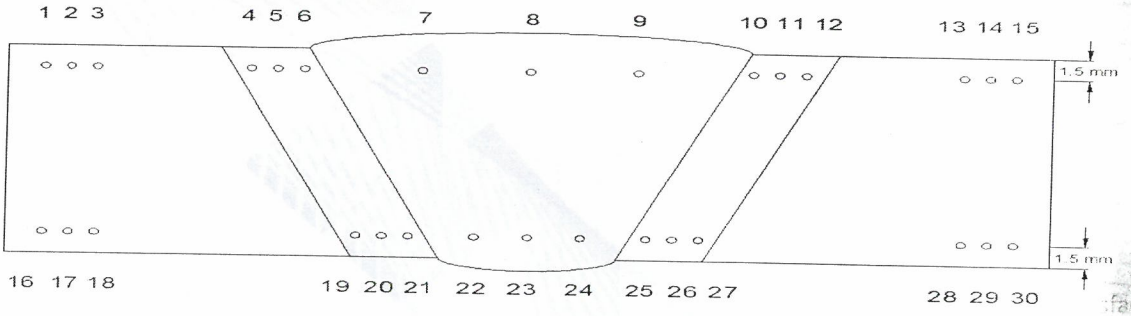

Vickers Hardness Test – E2826ha | Test Method – ASTM E92- 17 | (±)Expanded Uncertainty: --

Hardness Reading In HV at load 10 kgf

SR No	Area (TOP)	Observation (HV10)	SR No	Area (BOTTOM)	Observation (HV10)
1	PARENT	174	16	PARENT	173
2	PARENT	173	17	PARENT	178
3	PARENT	176	18	PARENT	176
4	HAZ	202	19	HAZ	205
5	HAZ	209	20	HAZ	202
6	HAZ	213	21	HAZ	207
7	Weld	170	22	Weld	182
8	Weld	173	23	Weld	180
9	Weld	178	24	Weld	178
10	HAZ	206	25	HAZ	202
11	HAZ	212	26	HAZ	202
12	HAZ	212	27	HAZ	201
13	PARENT	170	28	PARENT	173
14	PARENT	179	29	PARENT	169
15	PARENT	177	30	PARENT	171

Remarks: Observation.

Results to be evaulated

Tested By	Reviewed & Authorized Signatory Amit Meghani	Witnessed By

- The Sample was not drawn by Laboratory.
- The above test reports relate only to sample submitted / tested.
- Test Reports Shall not be reproduced except in full, without written permission of laboratory.

Form – 20 R. 03

End of Test Report

254/I, Industrial Lining, G.I.D.C., Makarpura, Vadodara - 390 010.
Call : 7490934252 Email : globallab17@gmail.com ● Website : www.globallaboratory.in

Test Report

Name & Add. Of Customer	VISHAL ENTERPRISE D-2/E, 397-398, DAHEJ G.I.D.C, JOLWA, BHARUCH – 392 130.	**TC No.**: E2824cv **ULR No.:** TC836222000005282F **Date of Issue:** 08.09.2022
Type of Test	Impact Test	**Page:** 1 of 1
Instrument Utilised	GMS-TM-07	**Location:** At Laboratory
Customer Ref.	Delivery Challan and Packing List: VE/2154, Date: 31.08.2022	
Sample received on	01.09.2022	
Nature of sample	Welded Plate Sample	**Condition of sample:** Satisfactory
Sample Size(mm)	500 mm X 300 mm X 25 mm Thk	**Sample Drawn by:** Party, Stamped by " TUV INDIA"
Specification	IS 2062 GRADE E350 QUALITY C (Client Requirement)	**Test Completed on:** 08.09.2022
Sample ID	Project Name: EN202775 LA PORTE HYCO4, Client Name: ITT Engineering India Pvt. Ltd., Identification – VEPL/PQR/006-2G	

Results

Discipline – Mechanical Testing,

Group – Ferrous material & its Alloys

Impact Testing – E2824cv		Test Method – ASTM A370-21			(±)U Of M (J) : 2.96		Test Temperature (°C): - 20	
Location		Sample Size (mm)	Sample 1 (J)	Sample 2 (J)	Sample 3 (J)	Average Value (J)	Required Value Min. (J)	
							Average Value	Individual Value
E2824cv1 (Weld)	Actual size	10 x 10 x 55	74	66	60	66.67	27	20
--	--	--	Sample 4 (J)	Sample 5 (J)	--	--	--	--
--	--	10 x 10 x 55	52	82	--	--	--	--
--	--	--	Sample 1 (J)	Sample 2 (J)	Sample 3 (J)	Average Value (J)	--	--
E2824cv2 (HAZ)	Actual size	10 x 10 x 55	60	54	58	57.33	27	20
--	--	--	Sample 4 (J)	Sample 5 (J)	--	--	--	--
--	--	10 x 10 x 55	48	78	--	--	--	--

Remarks: The Offered Sample complying Requirement of IS 2062 GRADE E350 QUALITY C (Client Requirement) based on Reported Results ± U.O.M Within Permissible Limits.

Tested By	Reviewed & Authorized Signatory Amit Meghani	Witnessed By

- The Sample was not drawn by Laboratory.
- The above test reports relate only to sample submitted / tested.
- Test Reports Shall not be reproduced except in full, without written permission of laboratory.

Form – 20 R. 03

End of Test Report

Test Report

Name & Add. Of Customer	VISHAL ENTERPRISE D-2/E, 397-398, DAHEJ G.I.D.C, JOLWA, BHARUCH – 392 130.	**TC No.:** E2825cv **ULR No.:** TC836222000005283F **Date of Issue:** 08.09.2022
Type of Test	Impact Test	**Page:** 1 of 1
Instrument Utilised	GMS-TM-07	**Location:** At Laboratory
Customer Ref.	Delivery Challan and Packing List: VE/2154, Date: 31.08.2022	
Sample received on	01.09.2022	
Nature of sample	Welded Plate Sample	**Condition of sample:** Satisfactory
Sample Size(mm)	500 mm X 300 mm X 25 mm Thk	**Sample Drawn by:** Party, Stamped by "TUV INDIA"
Specification	IS 2062 GRADE E350 QUALITY C (Client Requirement)	**Test Completed on:** 08.09.2022
Sample ID	Project Name: EN202775 LA PORTE HYCO4, Client Name: ITT Engineering India Pvt. Ltd., Identification – VEPL/PQR/006-3G	

Results

Discipline – Mechanical Testing,

Group – Ferrous material & its Alloys

Impact Testing – E2825cv		Test Method – ASTM A370-21			(±)U Of M (J) : 2.96		Test Temperature (°C): - 20	
Location		Sample Size (mm)	Sample 1 (J)	Sample 2 (J)	Sample 3 (J)	Average Value (J)	Required Value Min. (J)	
							Average Value	Individual Value
E2825cv1 (Weld)	Actual size	10 x 10 x 55	100	92	86	92.67	27	20
--	--	--	Sample 4 (J)	Sample 5 (J)	--	--	--	--
--	--	10 x 10 x 55	80	108	--	--	--	--
--	--	--	Sample 1 (J)	Sample 2 (J)	Sample 3 (J)	Average Value (J)	--	--
E2825cv2 (HAZ)	Actual size	10 x 10 x 55	70	80	76	75.33	27	20
--	--	--	Sample 4 (J)	Sample 5 (J)	--	--	--	--
--	--	10 x 10 x 55	62	92	--	--	--	--

VISHAL ENTERPRISE QA/QC

Remarks: The Offered Sample complying Requirement of IS 2062 GRADE E350 QUALITY C (Client Requirement) based on Reported Results ± U.O.M Within Permissible Limits.

Tested By	Reviewed & Authorized Signatory Amit Meghani	Witnessed By

GLOBAL METALLURGICAL SERVICES VADODARA

Technical Inspection Services TUV 450 TUV India

08/09/2022

- The Sample was not drawn by Laboratory.
- The above test reports relate only to sample submitted / tested.
- Test Reports Shall not be reproduced except in full, without written permission of laboratory.

Form – 20 R. 03

End of Test Report

Test Report

Name & Add. Of Customer	VISHAL ENTERPRISE D-2/E, 397-398, DAHEJ G.I.D.C, JOLWA, BHARUCH – 392 130.	**TC No.**: E2826cv **ULR No.:** TC836222000005284F **Date of Issue:** 08.09.2022
Type of Test	Impact Test	**Page:** 1 of 1
Instrument Utilised	GMS-TM-07	**Location:** At Laboratory
Customer Ref.	Delivery Challan and Packing List: VE/2154, Date: 31.08.2022	
Sample received on	01.09.2022	
Nature of sample	Welded Plate Sample	**Condition of sample:** Satisfactory
Sample Size(mm)	500 mm X 300 mm X 25 mm Thk	**Sample Drawn by:** Party, Stamped by "TUV INDIA"
Specification	IS 2062 GRADE E350 QUALITY C (Client Requirement)	**Test Completed on:** 08.09.2022
Sample ID	Project Name: EN202775 LA PORTE HYCO4, Client Name: ITT Engineering India Pvt. Ltd., Identification – VEPL/PQR/006-4G	

Results

Discipline – Mechanical Testing,

Group – Ferrous material & its Alloys

Impact Testing – E2826cv		Test Method – ASTM A370-21			(±)U Of M (J) : 2.96		Test Temperature (°C): - 20	
Location		Sample Size (mm)	Sample 1 (J)	Sample 2 (J)	Sample 3 (J)	Average Value (J)	Required Value Min. (J)	
							Average Value	Individual Value
E2826cv1 (Weld)	Actual size	10 x 10 x 55	32	36	40	36.00	27	20
--	--	--	Sample 4 (J)	Sample 5 (J)	--	--	--	--
--	--	10 x 10 x 55	26	46	--	--	--	--
--	--	--	Sample 1 (J)	Sample 2 (J)	Sample 3 (J)	Average Value (J)	--	--
E2826cv2 (HAZ)	Actual size	10 x 10 x 55	44	46	54	48.00	27	20
--	--	--	Sample 4 (J)	Sample 5 (J)	--	--	--	--
--	--	10 x 10 x 55	40	62	--	--	--	--

Remarks: The Offered Sample complying Requirement of IS 2062 GRADE E350 QUALITY C (Client Requirement) based on Reported Results ± U.O.M Within Permissible Limits.

Tested By	Reviewed & Authorized Signatory Amit Meghani	Witnessed By

- The Sample was not drawn by Laboratory.
- The above test reports relate only to sample submitted / tested.
- Test Reports Shall not be reproduced except in full, without written permission of laboratory.

Form – 20 R. 03

End of Test Report

VISHAL ENTERPRISE & VRISHAL ENGINEERING PRIVATE LIMITED
GROUP OF COMPANIES

PQR / WPQ TEST RUNNING SHEET

DATE : 30.08.2022

CLIENT : ITT ENGINEERING INDIA PVT LTD.
PROJECT NAME : La Porte HyCO-4"
WPS No. : VEPL/PWPS/006 REV.02
TEST COUPON SIZE & THK : 500 mm X 300 mm X 25 mm
MATERIAL SPEC / GRADE : IS 2062 E350 GR. C
MATERIAL HEAT NO. : F900998 (VE/ITT/STR/IMIR/002-7)
WELDING POSITION : 2G
PROGRESSION : UP-HILL
TEST COUPON No. : VEPL/PQR/006 - 2G
WELDER NAME : ASWINI KUMAR
WELDER No. : S-AB13
WELDING RECTIFIER NO : M121219104500
WELDING CONSUMABLES : E-71T-1C (Batch : 6220651115 , Size : 1.2 mm)
BRAND : ADOR
PRE-HEAT TEMPERATURE : 25° C

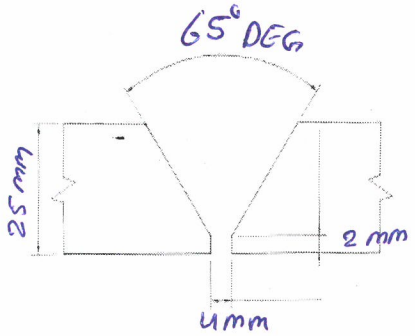

Shelding Gas Flow: L/min 14
Purging Gas Flow: L/min NA

WELD LAYERS	PROCESS	FILLER METAL		CURRENT		VOLTS	INTER-PASS TEMP (MAX)	TRAVEL SPEED (mm/min.)	HEAT-INPUT Max. (kJ/mm)
		AWS CLASS	SIZE (mm)	TYPE POLARITY	AMPS				
ROOT	FCAW	E71T-1C	1.2	DCEP	130-136	23-24	125°C	136.24	1.43
HOT-PASS	FCAW	E71T-1C	1.2	DCEP	139-143	24-25	155°C	113.2	1.89
FILL-UP-1	FCAW	E71T-1C	1.2	DCEP	129-144	22-26	142°C	135.21	1.66
FILL-UP-2	FCAW	E71T-1C	1.2	DCEP	135-149	23-25	187°C	114.52	1.95
FILL-UP-3	FCAW	E71T-1C	1.2	DCEP	147-155	23-26	110°C	120.23	2.01
FILL-UP-4	FCAW	E71T-1C	1.2	DCEP	141-151	22-25	134°C	132.29	1.71
FILL-UP-5	FCAW	E71T-1C	1.2	DCEP	168-175	22-25	179°C	134.13	1.95
FILL-UP-6	FCAW	E71T-1C	1.2	DCEP	160-181	21-24	193°C	126.66	2.05
FILL-UP-7	FCAW	E71T-1C	1.2	DCEP	146-153	22-24	209°C	156.25	1.41
CAP-1	FCAW	E71T-1C	1.2	DCEP	123-147	23-25	123°C	149.63	1.47
CAP-2	FCAW	E71T-1C	1.2	DCEP	132-139	23-25	142°C	155.55	1.34
CAP-3	FCAW	E71T-1C	1.2	DCEP	130-146	24-26	167°C	149.62	1.52

VE-QC	CLEINT QC/ TPI
VISHAL ENTERPRISE QC	REVIEWED / NOTED %WITNESSED Hcasipd 30-08-2022 Reliance Inspection Services India HARDIK PRAJAPTI
NAME: Yagyavalakya Bairagi	NAME:
DATE: 30.08.22	DATE:

VE/QA/FORMAT/52 REV.02

VISHAL ENTERPRISE & VRISHAL ENGINEERING PRIVATE LIMITED
GROUP OF COMPANIES

PQR / WPQ TEST RUNNING SHEET

DATE : 30.08.2022

CLIENT : ITT ENGINEERING INDIA PVT LTD.
PROJECT NAME : La Porte HyCO-4"
WPS No. : VEPL/PWPS/006 REV.02
TEST COUPON SIZE & THK : 500 mm X 300 mm X 25 mm
MATERIAL SPEC / GRADE : IS 2062 E350 GR. C
MATERIAL HEAT NO. : F900998 (VE/ITT/STR/IMIR/002-7)
WELDING POSITION : 3G
PROGRESSION : UP-HILL
TEST COUPON No. : VEPL/PQR/006 - 3G
WELDER NAME : ASWINI KUMAR
WELDER No. : S-AB13
WELDING RECTIFIER NO : M121219104500
WELDING CONSUMABLES : E-71T-1C (Batch : 6220651115 , Size : 1.2 mm)
BRAND : ADOR
PRE-HEAT TEMPERATURE : 25° C

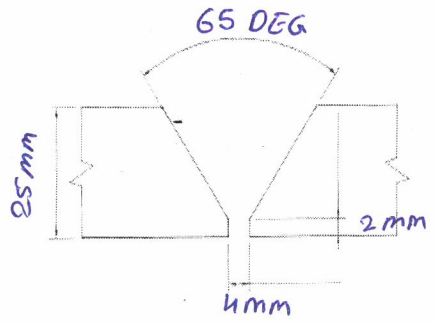

Shelding Gas Flow: L/min 14
Purging Gas Flow: L/min NA

WELD LAYERS	PROCESS	FILLER METAL		CURRENT		VOLTS	INTER-PASS TEMP (MAX)	TRAVEL SPEED (mm/min.)	HEAT-INPUT Max. (kJ/mm)
		AWS CLASS	SIZE (mm)	TYPE POLARITY	AMPS				
ROOT	FCAW	E71T-1C	1.2	DCEP	120-139	21-24	122°C	83.34	2.2
HOT-PASS	FCAW	E71T-1C	1.2	DCEP	151-169	21-24	151.56°C	147.85	1.7
FILL-UP-1	FCAW	E71T-1C	1.2	DCEP	155-164	22-24	192°C	103.09	2.27
FILL-UP-2	FCAW	E71T-1C	1.2	DCEP	171-181	23-25	124°C	136.24	1.72
FILL-UP-3	FCAW	E71T-1C	1.2	DCEP	175-186	22-24	133°C	127.2	2.1
FILL-UP-4	FCAW	E71T-1C	1.2	DCEP	168-173	21-25	142°C	110.2	2.35
FILL-UP-5	FCAW	E71T-1C	1.2	DCEP	168-174	21-25	182°C	135.12	1.93
FILL-UP-6	FCAW	E71T-1C	1.2	DCEP	175-181	21-25	110°	141.29	1.92
FILL-UP-7	FCAW	E71T-1C	1.2	DCEP	171-182	22-24	149°C	145.11	1.8
CAP-1	FCAW	E71T-1C	1.2	DCEP	155-162	21-23	103°C	102.63	2.17
CAP-2	FCAW	E71T-1C	1.2	DCEP	159-167	22-25	138°C	118.21	2.11
CAP-3	FCAW	E71T-1C	1.2	DCEP	153-161	21-24	168°C	112.37	2.06

VE-QC	CLEINT QC/ TPI
VISHAL ENTERPRISE VQC	REVIEWED / NOTED %WITNESSED HARDIK PRAJAPTI 30-08-2022
NAME: Yagyavalakya Bairagi	NAME:
DATE: 30.08.22	DATE:

VE/QA/FORMAT/52 REV.02

VISHAL ENTERPRISE & VRISHAL ENGINEERING PRIVATE LIMITED
GROUP OF COMPANIES

PQR / WPQ TEST RUNNING SHEET

DATE : 30.08.2022

CLIENT : ITT ENGINEERING INDIA PVT LTD.
PROJECT NAME : La Porte HyCO-4"
WPS No. : VEPL/PWPS/006 REV.02
TEST COUPON SIZE & THK : 500 mm X 300 mm X 25 mm
MATERIAL SPEC / GRADE : IS 2062 E350 GR. C
MATERIAL HEAT NO. : F900998 (VE/ITT/STR/IMIR/002-7)
WELDING POSITION : 4G
PROGRESSION : -
TEST COUPON No. : VEPL/PQR/006 - 4G
WELDER NAME : ASWINI KUMAR
WELDER No. : S-AB13
WELDING RECTIFIER NO : M121219104500
WELDING CONSUMABLES : E-71T-1C (Batch : 6220651115 , Size : 1.2 mm)
BRAND : ADOR
PRE-HEAT TEMPERATURE : 25° C

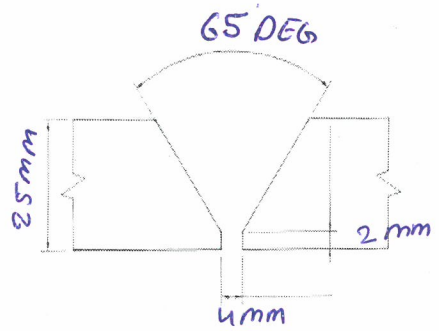

Shelding Gas Flow: L/min 16
Purging Gas Flow: L/min NA

WELD LAYERS	PROCESS	FILLER METAL		CURRENT		VOLTS	INTER-PASS TEMP (MAX)	TRAVEL SPEED (mm/min.)	HEAT-INPUT Max. (kJ/mm)
		AWS CLASS	SIZE (mm)	TYPE POLARITY	AMPS				
ROOT	FCAW	E71T-1C	1.2	DCEP	111-131	21-23	112°C	118.32	1.52
HOT-PASS	FCAW	E71T-1C	1.2	DCEP	122-136	22-24	142°C	101.36	1.93
FILL-UP-1	FCAW	E71T-1C	1.2	DCEP	128-134	23-24	167°C	123.22	1.56
FILL-UP-2	FCAW	E71T-1C	1.2	DCEP	132-149	21-25	110°C	128	1.74
FILL-UP-3	FCAW	E71T-1C	1.2	DCEP	133-147	22-24	132°C	141	1.5
FILL-UP-4	FCAW	E71T-1C	1.2	DCEP	129-139	22-24	172°C	133.52	1.49
FILL-UP-5	FCAW	E71T-1C	1.2	DCEP	141-158	23-26	205°C	128.6	1.91
FILL-UP-6	FCAW	E71T-1C	1.2	DCEP	140-153	23-26	213°C	119.62	1.99
CAP-1	FCAW	E71T-1C	1.2	DCEP	131-137	22-25	168°C	123.2	1.66
CAP-2	FCAW	E71T-1C	1.2	DCEP	135-143	22-25	188°C	135.2	1.58
CAP-3	FCAW	E71T-1C	1.2	DCEP	132-149	22-25	137°C	119.5	1.87

VE-QC	CLEINT QC/ TPI
VISHAL ENTERPRISE QC/QC	REVIEWED / NOTED ..... %WITNESSED HARDIK PRAJAPTI 30-08-2022
NAME: Yayyavalalsya Bairagi	NAME:
DATE: 30.08.22	DATE:

VE/QA/FORMAT/52 REV.02

VISHAL ENTERPRISE & VRISHAL ENGINEERING PRIVATE LIMITED
GROUP OF COMPANIES
WELD VISUAL INSPECTION REPORT (PQR)

CLIENT	ITT ENGINEERING INDIA PVT LTD.	Report No	VE/ITT/PQR/WV/02
PROJECT	La Porte HyCO-4"	Date	30.08.2022
WO NO	-		

SR NO	PQR TEST COUPON NO.	WELDER NO.	WELDER NAME	MATERIAL	TYPE OF WELD	WELDING PROCESS	WPS NO.	APPLICABLE CODE	SIZE (mm)	RESULT	REMARKS
1	VEPL/PQR/006 - 2G	S-AB13	ASWINI KUMAR	IS 2062 E350 GR.C	CJP	FCAW	VEPL/PWPS/006	AWS D1.1	500 X 300 X 25	ACC	
2	VEPL/PQR/006 - 3G	S-AB13	ASWINI KUMAR	IS 2062 E350 GR.C	CJP	FCAW	VEPL/PWPS/006	AWS D1.1	500 X 300 X 25	ACC	
3	VEPL/PQR/006 - 4G	S-AB13	ASWINI KUMAR	IS 2062 E350 GR.C	CJP	FCAW	VEPL/PWPS/006	AWS D1.1	475 X 300 X 25	ACC	

QC CHECK SHEET — CHECKED ✓ X NOT APPLICABLE

DOCUMENT VERIFICATION	MARKING VERIFICATION CHECK	WELD SURFACE DEFECT CHECK	VISUAL CHECK
☐ APPROVED NDT DRG./TESTPLAN WITH LATEST REV. ☐ QUALIFIED WELDER LIST ☐ APPROVED WPS	☐ JOINT NO. ☑ WELDER NO.	☑ SPATTER ☑ REINFORCEMENT ☑ POROSITY/PIN HOLES ☑ SLAG ☑ CRACK ☑ UNDER CUT ☐ LUMPS/HIGH SPOT ☑ BEAD APEARANCE/WEAVING ☑ WELD SIZE ☑ UNDER FILL	☑ ARC STRIKE ☑ DISTORTION ☐ CLEAT MARK ☐ CORNER SEALING/ROUNDING ☑ PHYSICAL CONDITION

	VE QC	CLIENT QC / TPIA
SIGNATURE	Bairagi QA/QC	REVIEWED / NOTED %WITNESSED Hardik HARDIK PRAJAPTI
NAME	Yashwalakya Bairagi	
DATE	30.08.22	30/8/22

VE/QA/FORMAT/28A REV.00

VISHAL ENTERPRISE & VRISHAL ENGINEERING PRIVATE LIMITED
GROUP OF COMPANIES

RADIOGRAPHY TEST REPORT

CLIENT: ITT ENGINEERING INDIA PVT LTD.	PO/WO NO.: -	REPORT NO:	VE/ITT/RT/PQR/04
PROJECT: La Porte HyCO-4"		RT. Date:	31.08.2022
ITP No: -		Test Date:	30.08.2022
Source :Ir-192	Film : D7	Penetrameter :	1B
Strength: 8 Ci	Density : 2 to 4	Sensitivity: 2%	
Procedure No : -		Acceptance Standard : AWS D1.1	

Sr. No	PQR TEST COUPON NO.	WELDER NO.	MATERIAL	Size (mm)	Thk. (mm)	Technique	Segment	Film Size	Observation	Result
1	VEPL/PQR/006 - 2G	S-AB13	IS 2062 E350 GR.C (CS)	500 X 300	25	SWSI	AB	15X4	NSD	ACC
							BC	15X4	POR	ACC
2	VEPL/PQR/006 - 3G	S-AB13	IS 2062 E350 GR.C (CS)	500 X 300	25	SWSI	AB	15X4	NSD	ACC
							BC	15X4	NSD	ACC
3	VEPL/PQR/006 - 4G	S-AB13	IS 2062 E350 GR.C (CS)	475 X 300	25	SWSI	AB	15X4	POR	ACC
							BC	15X4	NSD	ACC

LEGENDS:

BT-BURN THROUGH, CK-CRACK, CP-CLUSTER POROSITY, CR-CUT & REWELD, CS-CHECK SURFACE, EP-EXCESS PENETRATION, DP-DEPERESSION, LF-LACK OF FUSION, LM-LOOSE MATERIAL, LP-LACK OF PENETRATION, MM-MISMATCH, PO-POROSITY, SI-SLAG INCLUSION, TI-TUNGUSTEN INCLUSION, UC-UNDERCUT, RS-RESHOOT, RT-RETAKE, MRS-MERGE & RESHOOT, SM-SCREEN MARK, PM-PROCESS MARK, NM-NAIL MARK, FM-FIM MARK, WM-WATER MARK, LD-LOW DENSITY, HD-HIGH DENSITY

	VE QC (I/II/III)	CLIENT-QC / TPI
Sign		
Name		
Date		

VE/QA/FORMAT/07 REV.2

VISHAL ENTERPRISE
QC/RC
31.08.2022

REVIEWED / NOTED
%WITNESSED
01/09/2022
RAVINDRA PRAJAPATI
Technical Inspection Services
TÜV
697
TÜV India

ADOR WELDING LIMITED

CREATING THE BEST WELDING EXPERIENCE

REGD. OFFICE: Ador House, 6, K. Dubhash Marg, Fort Mumbai - 400 001 | CIN. L70100MH1951PLC008647
1800 233 1071 care@adorians.com +91 20 40706000

ador peace of mind

SILVASSA PLANT
Survey No. 59/11/1, Silvassa-Khanvel Road,
Masat, Silvassa - 396 230.
U.T. of Dadra & Nagar Haveli, India
Website : www.adorwelding.com

TEST CERTIFICATE

Serial No. 3284284

AUTOMIG FC 71T-1 1.20mm (15 Kg Spool)
AWS A/SFA 5.20 E71T-1C

Date: 29 JUN 2022

Consumable	Batch No	Date of Manufacture
Wire	6220651115	JUN-2022

We certify that the supply made against this T.C. conforms to all requirements of ASME Section -II Part C-2021 in all respects.

CHEMICAL ANALYSIS : Tested in accordance with EN 10204, type 3.1

Elements	C%	Mn%	Si%	Cr%	Ni%	Mo%	Nb%	V%	W%	Cu%	Sn%	Fe%	S%	P%	Ti%	Zr%	Al%
Weld Metal	0.085	1.440	0.310	0.023	0.008	0.003	0.012	0.016	--	0.007	--	--	0.006	0.012	--	--	--

PHYSICAL PROPERTIES: All weld as welded condition, Shielding gas: CO2 : 100%

Ultimate Tensile strength	Yield Strength at 0.2% Offset	Elongation L= 4 x d	Charpy V-Notch Impact Values at -20 °C	Hardness Test 3 Layers	Ferrite in Weld Deposit	Radiography
MPa (N/mm²)	MPa (N/mm²)	%	Joules	Brinell /Rc/Hv	%/FN	
550	487	25.6	54,52,46,50,48	160,160,165 BHN	--	Satisfactory

Remarks : Fillet weld tested and found satisfactory.

Copy of MTC

REVIEWED / ~~NOTED~~
..... % ~~WITNESSED~~
HARDIK PRAJAPTI 30/8/2022

Officer (Q.A.)

ADOR WELDING LIMITED QUALITY ASSURANCE DEPT. SILVASSA (INDIA)

Hardik 29.08.2022

Dept. Head (Q.A.)

AWL-CONS-IMS-QCF-06/Rev.01

MILL TEST CERTIFICATE

JSW Steel Limited

SURVEY NO - 659, VILLAGE - VARSAMEDI, TA. - ANJAR (KUTCH) GUJARAT INDIA - 370110

Anjar Works

IS- 2062 CM/L- 7945703

TEST CERTIFICATE NO. : JSW/PCMD/711880301

DATE : 20.07.2022

CUSTOMER

P. O. NO.

SPECIFICATION : EN 10025-2 : 2019 / IS 2062 : 2011

GRADE : S355J2+N / E350 C

UT STD. : ASTM A578 Level B

Impact Temp.(°C) : -20

Sr. No.	Plate / Coil No.	Heat No.	Thk (MM)	Width (MM)	Length (MM)	Weight (MT)	Mechanical Properties (Transverse Tensile) 1 YS* (MPa)	1 UTS (MPa)	1 %EL 5.65√a	1 %RA	2 YS* (MPa)	2 UTS (MPa)	2 %EL 5.65√a	2 %RA	Bend (Transverse)	CHARPY V-NOTCH IMPACT TEST (Joules) Longitudinal 1	2	3	AVG	Grain size (ASTME 112)	Z - Direction Test (Through Thickness) 1	2	3	AVG	Y Groove Crackability Test			NDTT	Remarks
Specified Requirement						Min	355	490	22	---	355	490	22	---	≤25-2T, >25-NA	---			27	---	---	---	---	---	---	---	---	---	---
						Max	---	630	---	---	---	630	---	---		---			---	---	---	---	---	---	---	---	---	---	---
1	22GP1169A1	F900407	22.00	2500	12000	5.181	412	523	27	---	416	527	28	---	OK	93	77	104	91	---	---	---	---	---	---	---	---	---	---
2	22GP1469A1	D900572	18.00	2500	12000	4.239	412	527	30	---	418	531	28	---	OK	68	74	77	73	---	---	---	---	---	---	---	---	---	---
3	22GP2185A1	F900998	25.00	2500	12000	5.888	411	523	30	---	415	529	26	---	OK	74	85	71	77	---	---	---	---	---	---	---	---	---	---
4	22GP2185A2	F900998	25.00	2500	12000	5.888	411	523	30	---	415	529	26	---	OK	74	85	71	77	---	---	---	---	---	---	---	---	---	---
5	22GP2194A1	F900998	25.00	2500	12000	5.888	411	523	30	---	415	529	26	---	OK	74	85	71	77	---	---	---	---	---	---	---	---	---	---
6	22GP2194A2	F900998	25.00	2500	12000	5.888	411	523	30	---	415	529	26	---	OK	74	85	71	77	---	---	---	---	---	---	---	---	---	---

Chemical Composition (%)

HEAT ANALYSIS	Heat No.	C	Mn	S	P	Si	Cr	Ni	Cu	Ti	V	Nb	Mo	Al	N	Ca	B	Nb+Ti+V	Cu+Ni	Cr+Mo+Cu+Ni	Al/N	CE**	Pcm
Specified Requirement	Min	---	---	---	---	---	---	---	---	---	---	---	---	---	---	---	---	---	---	---	---	---	---
	Max	0.220	1.600	0.020	0.025	0.550	---	---	---	---	---	---	---	0.020	---	---	---	---	---	---	---	---	---
	F900407	0.165	1.330	0.003	0.015	0.265	0.023	0.009	0.008	0.015	0.001	0.023	0.001	0.037	0.0049	0.0001	0.0004	0.039	0.017	0.041	7.55	0.39	0.24
	D900572	0.174	1.360	0.005	0.015	0.246	0.023	0.009	0.008	0.016	0.001	0.028	0.001	0.045	0.0038	0.0002	0.0003	0.045	0.017	0.041	11.84	0.41	0.25
	F900998	0.173	1.360	0.002	0.015	0.270	0.022	0.009	0.008	0.013	0.001	0.024	0.001	0.035	0.0036	0.0004	0.0004	0.038	0.017	0.040	9.72	0.41	0.25
	F900998	0.173	1.360	0.002	0.015	0.270	0.022	0.009	0.008	0.013	0.001	0.024	0.001	0.035	0.0036	0.0004	0.0004	0.038	0.017	0.040	9.72	0.41	0.25
	F900998	0.173	1.360	0.002	0.015	0.270	0.022	0.009	0.008	0.013	0.001	0.024	0.001	0.035	0.0036	0.0004	0.0004	0.038	0.017	0.040	9.72	0.41	0.25
	F900998	0.173	1.360	0.002	0.015	0.270	0.022	0.009	0.008	0.013	0.001	0.024	0.001	0.035	0.0036	0.0004	0.0004	0.038	0.017	0.040	9.72	0.41	0.25

PRODUCT ANALYSIS	Heat No.	C	Mn	S	P	Si	Cr	Ni	Cu	Ti	V	Nb	Mo	Al	N	Ca	B	Nb+Ti+V	Cu+Ni	Cr+Mo+Cu+Ni	Al/N	CE**	Pcm
Specified Requirement	Min	---	---	---	---	---	---	---	---	---	---	---	---	---	---	---	---	---	---	---	---	---	---
	Max	0.220	1.600	0.020	0.025	0.550	---	---	---	---	---	---	---	0.020	---	---	---	---	---	---	---	---	---
	F900407	0.163	1.315	0.003	0.015	0.261	0.023	0.009	0.008	0.015	0.001	0.023	0.001	0.036	0.0048	0.0001	0.0004	0.039	0.017	0.041	7.50	0.39	0.24
	D900572	0.171	1.346	0.005	0.015	0.242	0.023	0.009	0.008	0.016	0.001	0.028	0.001	0.044	0.0037	0.0002	0.0003	0.044	0.017	0.040	11.84	0.40	0.25
	F900998	0.170	1.346	0.002	0.015	0.265	0.022	0.009	0.008	0.013	0.001	0.024	0.001	0.034	0.0035	0.0004	0.0004	0.037	0.017	0.039	9.72	0.40	0.25
	F900998	0.170	1.346	0.002	0.015	0.265	0.022	0.009	0.008	0.013	0.001	0.024	0.001	0.034	0.0035	0.0004	0.0004	0.037	0.017	0.039	9.72	0.40	0.25
	F900998	0.170	1.346	0.002	0.015	0.265	0.022	0.009	0.008	0.013	0.001	0.024	0.001	0.034	0.0035	0.0004	0.0004	0.037	0.017	0.039	9.72	0.40	0.25
	F900998	0.170	1.346	0.002	0.015	0.265	0.022	0.009	0.008	0.013	0.001	0.024	0.001	0.034	0.0035	0.0004	0.0004	0.037	0.017	0.039	9.72	0.40	0.25

IT IS CERTIFIED THAT THE MATERIAL DESCRIBED ABOVE FULLY CONFIRM TO EN 10025-2:2019 & EQUIVALENT TO IS 2062:2011
CHEMICAL COMPOSITION & MECHANICAL PROPERTIES OF THE PRODUCT AS TESTED IN ACCORDANCE WITH THE SCHEME OF TESTING AND INSPECTION CONTAINED IN BIS CERTIFICATION MARKS LICENCE NO. CM/L-7945703 ARE AS INDICATED ABOVE
AGAINST EACH ORDER NO.
PLAESE REFER TO EN 10025-2:2019 & IS 2062:2011 FOR DETAILS OF SPECIFICATION REQUIREMENTS.

Note :
1) Test Certificate confirms to EN 10204:2004 Type 3.1
2) Process Route : SLAB (BOF-LHF-RH-CCM-Fully Killed(Al&Si Killed))-Hot Rolling.
3) Supply Condition : Normalized Rolled
4) Mechanical Properties are certified at Room Temperature unless specified.
5) Ultrasonic Test are satisfactory as per : ASTM A578 Level B
6) Dimensions are satisfactory as per EN10029:2010 Class A
7) Surface condition are satisfactory as per EN10163-2:2004,Class B,Subclass 1
8) Weight calculation for plates is as per Theoretical Calculation

Printed : 20.07.2022

Legend : YS : Yield Strength, UTS : Ultimate Tensile Strength, EL : % Elongation, RA : Reduction in Area, Thk : Thickness, NDTT : Nil Ductility Transition Test, Min : Minimum, Max : Maximum, NA: Not Applicable, S: Simulated Post-weld Heat Treatment Test,Sat : Satisfactory,WBBT-Weld bead bend test YS*=t≤16-355, 16<t≤40-345, 40<t≤63=335 ,CE**=0.47 for >30mm

VISHAL ENTERPRISE QA/QC

VISHAL ENTERPRISE

REVIEWED / NOTED / WITNESSED

Technical Inspection Services TÜV 697 India

20/08/2022

(Quality Assurance & Control Dept)

RAVINDRA PRAJAPATI

AUTHORISED SIGNATORY

Format No. : JSW/QAC/F/48 Rev.00