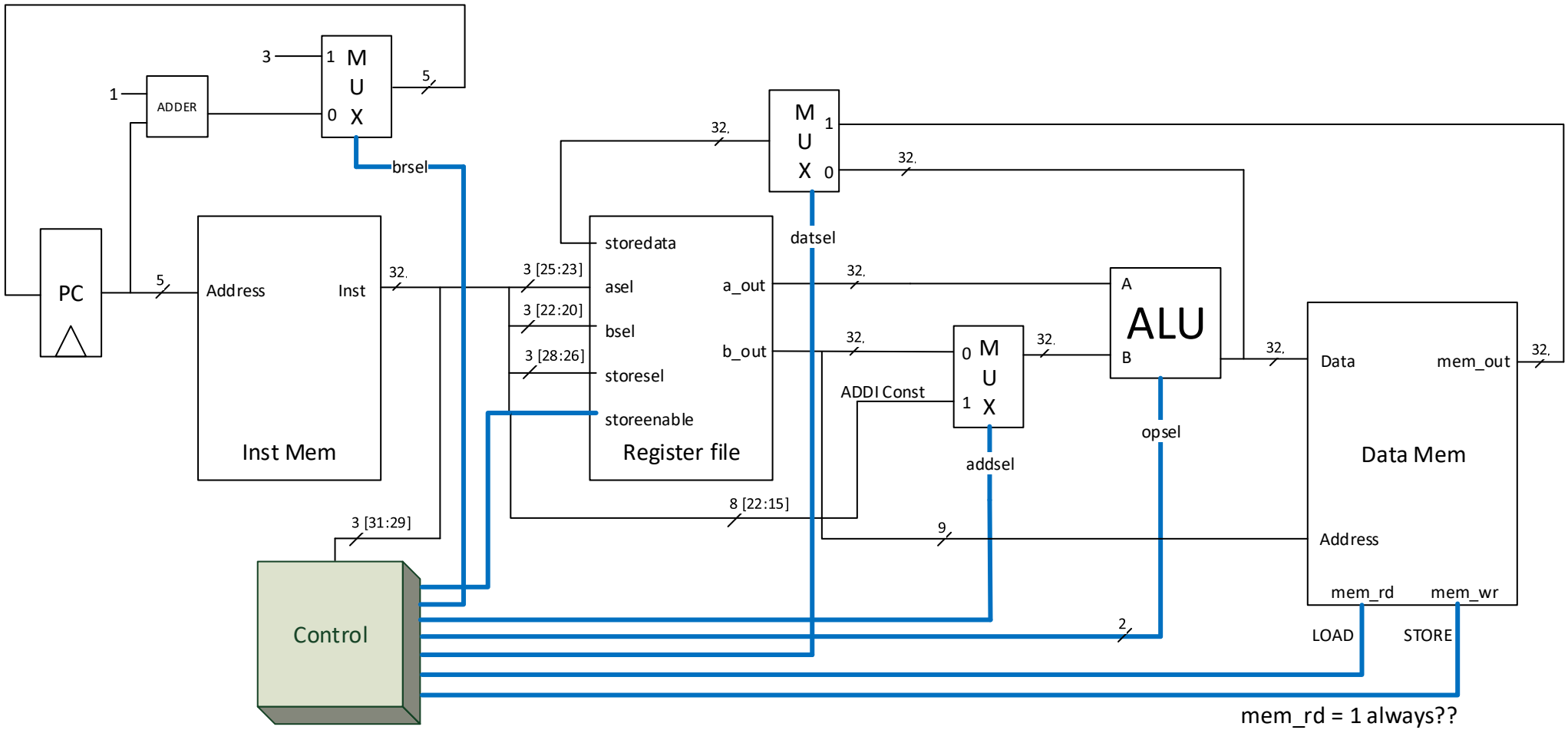

mem_rd = 1 always??
We have a mux on mem_out
so to have mem_rd = 1
always is fine