EINDHOVEN UNIVERSITY OF TECHNOLOGY

BEP

RobotEye - Designing a Camera Stabilization System for Robotics Using a Mini-Gimbal

Full Name	Student ID
Augustas Gerardas Pugžlys	1793454

Supervisor: Jordy Senden
Supervisor: René van de Molengraft
RBT BEP number: RBTBEP25020
Bachelor Of Science in Mechanical Engineering
Robotics section of the Mechanical Engineering Department

Eindhoven, July 22, 2025

Contents

1 Introduction **2**
1.1 Background & Motivation . . . 2
1.2 Project Goals & Scope . . . 2
1.3 Report outline . . . 2

2 Concept Design & Selection **3**
2.1 Objectives and Methodology . . . 3
2.2 3-DoF Gimbal Architectures . . . 3
2.3 Initial Design . . . 4
2.4 Improved Design with No Belt . . . 4
2.5 Final Design . . . 4

3 Hardware, Electronics and Connections **5**
3.1 Mechanical and Electronics Hardware . . . 5
3.2 Electronics Wiring . . . 7

4 Gimbal Control **8**
4.1 Inverse Kinematics . . . 8
4.2 Computer Vision . . . 8
4.3 Control Strategy . . . 8

5 Results **10**
5.1 Test Plan and Setup . . . 10
5.2 Costs . . . 10
5.3 Size . . . 10
5.4 General Gimbal Design Validation . . . 10
5.5 Orientation Range . . . 10
5.6 Frequency Response . . . 10
5.7 Stabilization Error . . . 11
5.8 Object Tracking Error . . . 11
5.9 Result Summary . . . 11

6 Future Improvements **12**
6.1 Mechanical Design Improvements . . . 12
6.2 Electronics and Power System Enhancements . . . 12
6.3 Software and Control Improvements . . . 12
6.4 Testing setup . . . 13
6.5 Project continuation . . . 13

7 Conclusion **14**

A Appendix A **16**
A.1 Disturbances and Movements . . . 16
A.2 Market Analysis . . . 16

B Appendix B **17**
B.1 Parallel Spherical Mechanism . . . 19

C Appendix C **20**
C.1 Torque Requirements . . . 20
C.2 2-DoF vs 3-DoF . . . 21
C.3 Assembly . . . 21
C.4 Costs . . . 23

D Control **24**
D.1 Numerical Inverse Kinematics . . . 24

List of Symbols

Table 0.1: *List of Symbols*

Symbol	Dimension	Unit	Unit Abbreviation
L	Length	Meter	m
α	Angular acceleration	Radians per second squared	rad/s^2
θ	Angle	Radians	rad
f	Frequency	Hertz	Hz
I	Moment of inertia	Kilograms time meter squared	$kg \cdot m^2$
T	Torque	Newton meters	Nm

1 | Introduction

1.1 | Background & Motivation

Many practical robot applications rely on computer vision systems for tasks such as mapping, object detection, and target tracking. However, the dynamic movements, especially prominent in legged robots and aerial vehicles, introduce disturbances in all directions, which induce motion blur [1], leading to reduced accuracy and effectiveness of the computer vision processes. Although software-based image processing techniques can mitigate this blur, they require a lot of computational power, introduce latency, struggle with moving objects as discussed in [2], and perform poorly under higher amplitude disturbances mentioned in [3], making them less suitable for implementation on robotic platforms. In contrast, mechanical stabilization systems provide a low-latency solution for compensating disturbances by physically decoupling the camera from the platform [4]. These systems require less computational power and can therefore run on external microcontrollers, enabling higher-frequency control. Commercial mini-gimbals achieving sufficient stabilization for high-frequency disturbances weigh above 250 g and have a height of around 10 cm subsection A.2, making integration on small platforms such as mini drones and robot arm end-effector difficult.

1.2 | Project Goals & Scope

The RobotEye project aims to design and develop a compact, standalone camera stabilization system for robotic applications using a mini-gimbal. The system is designed for real-time use on a robotic platform and aims to achieve stabilization for expected frequencies for the target robots subsection A.1. The specifications for gimbals from a European reseller are analyzed in subsection A.2, and the objectives made from the comparison are listed below. To validate the design, a mechanically smaller and lighter gimbal assembly was desired, while maintaining a similar cost. It should also support the cameras used by other students and feature a modular control architecture with the capability to implement computer vision. Thus, the key objectives are:

1. Attenuate disturbances of frequency ≤ 10 Hz, amplitude $\leq 10°$ and error $\leq 3°$ subsection A.1 [1].
2. Object tracking with range $\geq 70°$ vertically and horizontally, and settling time ≤ 1 s.
3. The size is $\leq 100 \times 100 \times 100$ mm box and weighs ≤ 300 g.
4. Material cost $\leq$ 300€ (target 200€).
5. Supports stabilization of a Raspberry Pi camera V2.

The system is designed to provide mechanical stabilization for diverse robot configurations, adapting to various disturbance sources. Examples include legged robots(e.g. Mini-Cheetah) with disturbances coming mainly from the walking cycle, wheeled robots where the terrain-based disturbances are prominent, aerial vehicles which often have to fight wind gusts or turbulence and robot arms which can have lower stiffness or come in contact with products. Thus, the goal is to enable better computer vision across various projects by mitigating camera jitter due to disturbances. The report is focused on the gimbal selection process, mechanical and electronic design, control architecture and validation. The worked-out equations, detailed explanations, CAD models and schematics can be found in the Appendices.

1.3 | Report outline

Section 2 covers possible gimbal topologies, which are compared using a decision matrix focused on size, inertia, and backlash. From the matrix, conclusions are made, and the final concept is developed through an iterative process. Chapter 3 delves into the realization of the chosen concept. First, the motor selection is discussed through analysis of motor types and specifications, then, the electronics, such as microcontrollers, IMU, and drivers, are detailed. With components known, the full mechanical assembly and electronics setup are explained.

Section 4 explains the control strategy, starting with the initialization and IMU-based inner control loop, followed by inverse kinematics, quaternion conversion, and computer vision-based targeting. Chapter 5 validates the gimbal with tests for the accuracy, range and comparison with the goals. Section 6 suggests the improvements derived from the tests and general considerations. With a final conclusion in chapter 7, summarizing the hybrid 3-DoF gimbal design and the results.

2 | Concept Design & Selection

In this section, multiple 3-DoF gimbal concepts are generated and evaluated. First of all, the justification for a 3-DoF gimbal (which can handle roll, pitch, yaw) is given, followed by the concept generation methodology. The possible gimbal topologies are compared via a decision matrix, and suggested hybrid designs are presented and chosen for a detailed prototype.

2.1 | Objectives and Methodology

The choice of a 3-DoF gimbal system comes from the source of the disturbances discussed in the introduction. For example, in the case of a drone, there are three degrees of freedom that the system must account for: roll, pitch, and yaw. Due to turbulence, the disturbances are felt in all degrees of freedom, meaning that the 2-DoF system cannot fully stabilize the end-effector. Adding additional degrees of freedom to the gimbal increases system complexity while offering minimal performance improvements.

The methodology of the final gimbal concept began with research into possible gimbal topologies. Information was gathered from Google Scholar, Science Direct, YouTube, and online forums showcasing novel prototypes. The designs were divided into architectures and evaluated based on research papers, design principles and geometric characteristics. By analyzing the decision matrix, a conclusion was made on the necessity of a hybrid design. This is followed up by suggested solutions, analyzing them further by producing simplistic 3D-modelled CAD geometries. Finally, through an iterative process of testing, flaw evaluation, and design refinement, a final concept design is achieved.

2.2 | 3-DoF Gimbal Architectures

Through analysis of the gimbal architectures listed in Table 2.1, strengths and weaknesses were found and evaluated; more detailed explanations and grading justifications are given in Appendix B. The analysis concludes that a direct-drive three-motor seen in Figure 2.1a gimbal mechanism is the most well-rounded option; it is free of any transmission mechanism, avoids backlash and is simple to control [5]. However, the motors are held up by one another, which increases moments of inertia and the general size and weight of the mechanism [6]. Gear-based designs like Figure 2.1b, although more compact, introduce play between gears, which leads to backlash and jitter [7]. Manufacturing can also be expensive and complex for such small parts. Belt-driven alternatives like Figure 2.1c mitigate the play and enable remote motor placement on the base; however, precise belt tension is difficult at small scale and introduces additional mass and size [8][9][10]. Compliant mechanisms as in Figure 2.1d were excluded due to their limited range of motion and manufacturing complexity [11]. Parallel spherical designs shown in Figure 2.1e and Figure 2.1f allow remote motor placement without the drawbacks of gears or belts; however, the end-effector is typically further away from the actuated motors, increasing overall size [12][7].

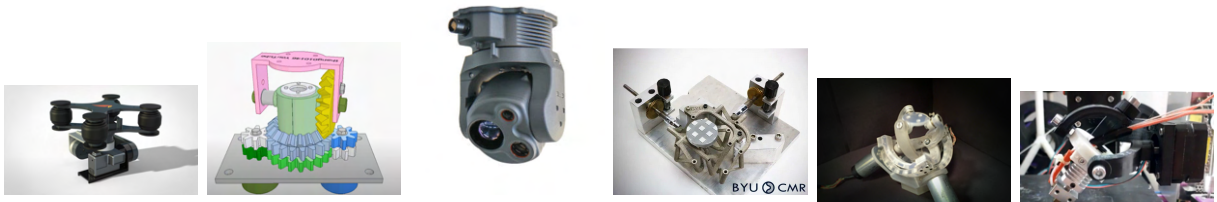

(a) *Direct-Drive gimbal* **(b)** *Gear-Driven manipulator* **(c)** *Belt-Driven gimbal* **(d)** *Compliant manipulator* **(e)** *3-DoF SPM* **(f)** *2-DoF SPM*

Figure 2.1: *Side-by-side comparison of six gimbal architectures evaluated for this project.*

From the decision matrix Table 2.1 it can be seen that none of the evaluated gimbal architectures satisfy all of the performance criteria. This leads to the hybrid approach taken in this report of combining the gimbal architectures, exploiting their strengths and minimizing drawbacks. The discussed designs incorporate elements from a direct-drive 3-DoF gimbal, belt-drive system and a spherical parallel mechanism.

Criteria	3-DoF Direct-Drive	Gear Gimbal	Belt Gimbal	Compliant Gimbal	Spherical Parallel-Axis 3-DoF Gimbal	Spherical Parallel-Axis 2-DoF Gimbal
Size	-	0	+	-	- -	+
Complexity	++	+	- -	-	- -	-
Ease of assembly	++	0	-	-	-	0
Backlash/Play	++	-	++	++	++	++
Virtual play	++	++	0	++	++	++
Moment of Inertia	- -	+	++	+	++	++
Range of Motion	++	0	+	- -	-	+
Manufacturing Costs	++	-	0	0	0	0

Table 2.1: *Evaluation of Mini-Gimbal Stabilization Systems (evaluation: ++ very positive, + positive, 0 neither, - negative, - - very negative).*

2.3 | Initial Design

The initial design is a hybrid between a typical 3-DoF gimbal and a belt-driven mechanism. The system uses three brushless DC motors, with a belt connecting the rotor of the middle to the frame of the motor. The belt enables rotation of the top motor around its center of mass, thereby reducing the moment of inertia. This design offers the advantages of reduced mechanical slip and small torques required by the motors. However, a key drawback was the implementation of belt tension, as the mechanism is very small and off-the-shelf solutions cannot be used.

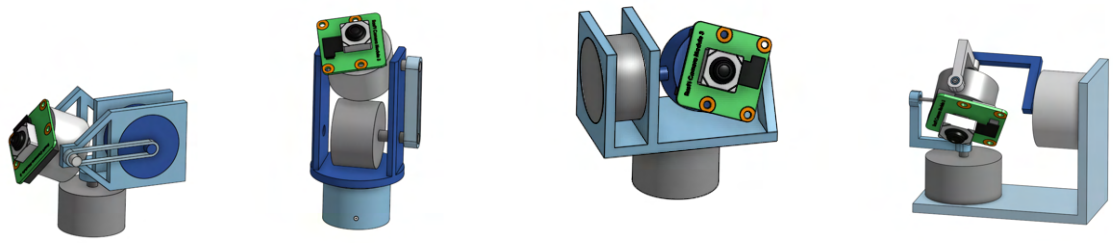

(a) *Two variations of the Belt-Driven Gimbal.* **(b)** *Direct-Drive Mechanism.* **(c)** *Hybrid 2-DoF Direct-Drive + SPM.*

Figure 2.2: *Suggested gimbal architectures: (a) belt/direct drive hybrid, (b) pure compact direct-drive, (c) hybrid of 2-DOF SPM and direct-drive.*

2.4 | Improved Design with No Belt

The following design retains the initial design's geometry and motor placement; however, it removes the belt to reduce assembly complexity. The gimbal shown in Figure 2.2a is a direct-drive system, which avoids play, while having no tension requirements. The disadvantage of the system arises from the offset of the motor centers of mass from the axis of rotation, as it introduces larger moments of inertia felt by each motor.

2.5 | Final Design

The final design adopts a 2-DoF spherical parallel mechanism for the two base axes, with the third (yaw) axis placed at the end-effector (camera). In this design, the two base motors are placed orthogonally, with small revolute joints to relieve the geometric constraints on the connecting links, see Figure 2.2b. This parallel design offers a wide range of motion, has no mechanical or virtual play coming from transmission systems. The camera and central motor are placed on the axis of rotation of the base motors, minimizing the moments of inertia. The drawbacks of this design include more complex inverse kinematics and the requirement for additional pivot joints.

In summary, the final gimbal design uses three orthogonally arranged motors, with direct drive transmission, maximizing stiffness while minimizing the size and play.

3 | Hardware, Electronics and Connections

The section is separated into the hardware section, where all of the physical compenents are finalised and chosen, and the electronics section, in which the connections are specified for the components.

3.1 | Mechanical and Electronics Hardware

In this subsection, first the motor selection is presented, as it significantly influenced the rest of the system design. Due to motor availability constraints, a simpler and physically larger system was used. After the motor is chosen, the frame design and the electronic part choices are explained.

3.1.1 | Motor Type

The goal is to have a smooth, fast, and responsive gimbal movement while keeping a relatively small size and price. Although in most cases brushless direct current motors (BLDC motors) are used, it is also fair to consider alternative motor types, such as servo, stepper, or DC motors. While continuous rotation is not required, a 360-degree range of motion should is desirable to support use cases of mapping and scanning areas. The advantages and disadvantages of motor types based on the design principles are listed in Table 3.1:

Feature	Servo Motor	Stepper Motor	Brushless DC Motor (BLDC)
Smooth Motion	0 (Vibrations in high precision use)	- (Moves in steps)	++(Very smooth)
Precision Control	- (Feedback control)	+ (Step-based precision)	++(High precision with encoder)
Response Speed	- - (Slower than BLDC)	- - (Limited speed)	++ (Fast and dynamic)
Torque at High Speed	- (Limited torque)	- (Drops off at high speed)	+ (Maintains torque well)
Ease of Use	++ (Built-in control, libraries available)	+ (Simple driver control)	- - (Advanced control required)
Rotation Range	0 (Often limited, but some continuous)	++ (Can rotate continuously)	+ (Can rotate continuously)
Common Applications	Robotics, RC vehicles, actuators	3D printers, CNC machines	Gimbals, drones, e-bikes, high-speed robotics
Typical Price	Low (5€-50€)	Medium (10€-100€)	High (50€-500€)

Table 3.1: *Comparison of Servo, Stepper, and Brushless DC Motors.*

Since the focus of the gimbal system is stabilization, smooth movements without any jitter are required. Different motors have varying specifications and can provide different advantages and disadvantages. In summary, stepper motors move in discrete steps; it is possible to use microstepping, which reduces the vibrations but does not completely eliminate them. Another type is the BLDC motor, which can be used with field-oriented control (FOC), which provides smooth motion under varying loads. Servo motors generally have integrated gearboxes, which add backlash to the system. Overall, the BLDC motors are the most suitable choice when considering a gimbal mechanism, as they can provide rapid changes in velocity while maintaining smooth motion profiles.

3.1.2 | Motor Choice

Even after narrowing down the motor type, multiple viable motor choices remain. Flat motor geometry saves a significant amount of space, as the parts added to it have less impact on the clearances required to rotate the motor around itself. Additionally, flat BLDC motors generate more torque, which is advantageous for rapid acceleration in the gimbal. From gimbal and electric motor websites both within and outside of the EU, the most suitable motors for the design are listed in Table 3.2.

Motor (solid shaft)	Ø × L (mm)	Voltage (V)	Torque (mNm)	Encoder option	Delivery in EU
iPower GM2804	35 x 15	10V	3	DIY external on-axis	EU hobby shop [13]
Maxon ECX 22 S flat	22 × 14	9V	7.95	Possible built in	EU with a quote [14]
Faulhaber 1509B	15 × 8.8	6V	0.45	DIY external off-axis	EU with a quote [15]
Orbex Gimbal BLDC 100150	16 × 10	6–12V	1.93	DIY external off-axis	Mainly US [16]

Table 3.2: *Comparison of compact flat BLDC motors suitable for lightweight 3-axis gimbals.*

While all of the motors in Table 3.2 fit the requirements, the ideal motor would be the Faulhaber 1509B, as it is the option with the shortest length and diameter combination, as well as sufficient torque. However, the main disadvantages of this motor are the time of delivery and the off-axis encoder requirement. A more accessible alternative is the iPower GM2804 BLDC motor, which features a hollow shaft, allowing for a simple on-axis encoder. Although its form factor and specifications are not

ideal, as it is of a bigger size and the torque delivered is too low to achieve the desired requirements, it can still be used to make a functional prototype.

Thus, to validate the topology of the suggested gimbal mechanism, the iPower GM2804 motors were selected for the prototype. While the ideal version with Faulhaber 1509B motors is more compact and has a better torque ratio with its moment of inertia, the control strategy is analogous, with main differences coming from the drivers and encoders used.

3.1.3 | Encoder

In a usual gimbal system, an encoder is often unnecessary for each motor, as it is possible to stabilize with just the inertial measurement unit's (IMU) input. This is because the inverse kinematics for a simple direct-drive system are trivial, and a simple PID controller can be used to counteract the rotational errors from disturbances. However, for the suggested design, absolute encoders are required to define position boundaries and communicate position to the controller for inverse kinematics. While it is possible to use incremental encoders by adding buttons at the contact points or using current sensing to obtain physical boundary positions, the absolute encoder reduces the complexity. The AS5600 magnetic absolute encoder allows for simple implementation with GM2804 BLDC motors and provides 12-bit resolution of angular positions [17]. The diametric magnet is mounted on the shaft, while the encoder is placed directly in front of it on the fixed motor cap and communicates the position to the microcontroller via I2C protocol.

3.1.4 | Inertial Measurement Unit (IMU)

An IMU provides the angular feedback necessary for stabilization: in this mechanism, the IMU is mounted on the frame, supplying its orientation to the control system in Quaternion format. Frame-mounted placement is necessary because the gimbal uses position control, due to the required inverse kinematics. In general, placing an IMU on the end-effector is better, as it accounts for any stiffness or misalignments of the assembly. For this gimbal, the BNO055 9-DoF IMU is used [18]. It has a 3-axis gyroscope, 3-axis accelerometer, and 3-axis magnetometer, allowing it to determine the frame position the set world orientation. It communicates via I2C; therefore, it can share the same pins as magnetic encoders and provides a precomputed rotation matrix in quaternions.

3.1.5 | Microcontroller/computer

The computer vision tasks are generally computationally expensive, but do not require high refresh rates; thus, a microcomputer such as Raspberry Pi 4 (RPi4) is used. In contrast, the motor control is less resource demanding; however, it requires high-frequency updates, which a microcontroller can satisfy. For the final prototype setup, to provide the 18 PWM signals required by motor drivers, 2 MCUs are used: Teensy 4.1 and Teensy 4.0. The Teensy 4.1 has six easily accessible complementary PWM pairs, while the Teensy 4.0 has only three; this combination provides enough PWM signals for control of three motors. The communication between the Teensys is done via UART. Ideally, an STM32-based MCU would be used, as it has more than 18 complementary PWM pairs; thus, and eliminates the need to externally connect multiple MCUs. However, it is physically larger and has a steeper learning curve, making it less suitable for a prototype.

3.1.6 | Power Distribution

Power is supplied by an 11.1V 3S 30C LiPo battery, which can power the entire system for a sustained period of time, enough for testing and prototyping. In general, the robot power source should be used as it would make the system more compact; therefore, the battery is used only for presentation purposes. Buck converters are used to supply the power to the required ports at 5V and 10V.

3.1.7 | Frame and Assembly

The frame was modelled and detailed around the iPower GM2804 motors and manufactured using 3D-printed PLA to enable fast prototyping. The concept CAD model was scaled up to accommodate the chosen motors, and detailed through an iterative process briefly described in subsection C.3. The bearings were connected to heat-set inserts using spacers to avoid friction and maintain the desired distances. The BLDC motors rotate their outer casings, which enables attaching links directly to them.

The magnetic encoders are placed behind each motor, with diametric magnets mounted on the moving link and extruding through the inner shaft of the motor, allowing the magnet to rotate while the encoder chip remains stationary. A baseplate holds two base motors, while the third one is suspended using linkages at the intersection of the rotational axes of the base motors. The IMU is installed at its designated attachment point on the baseplate, and the camera is positioned on the end-effector.

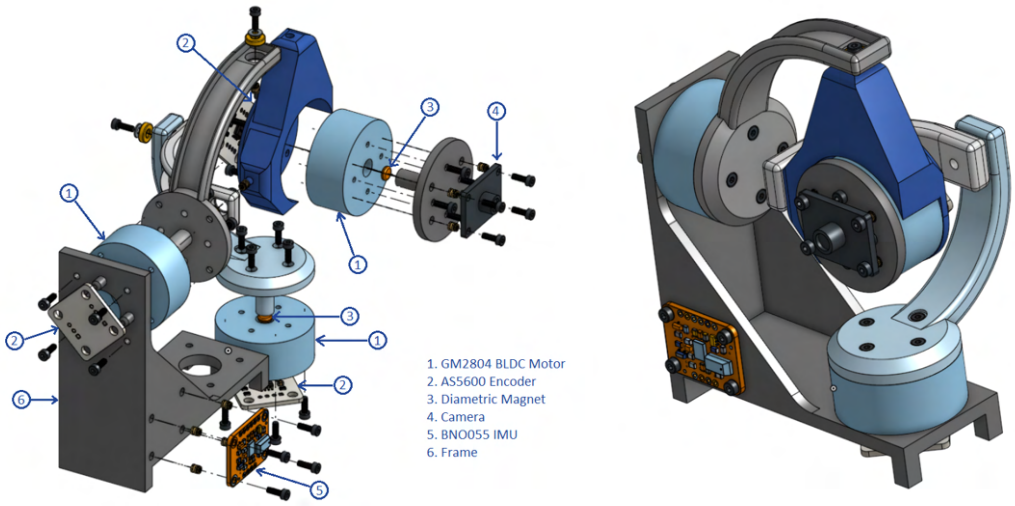

(a) *Exploded view of the final assembly.*

(b) *Final concept model assembled in Onshape.*

Figure 3.1: *Final detailed design model.*

3.2 | Electronics Wiring

The electronic connections are currently based on the prototyping breadboards; in the future, these should be made by soldering on circuit boards or full PCBs to simplify and organize the cabling. The electronic diagram is laid out in Figure 3.2: the power supply connects to both Teensy boards and the PI4 via a 5V DC-DC buck converter, while the power to the drivers is provided via a separate regulated DC-DC buck converter set to around 10 V.

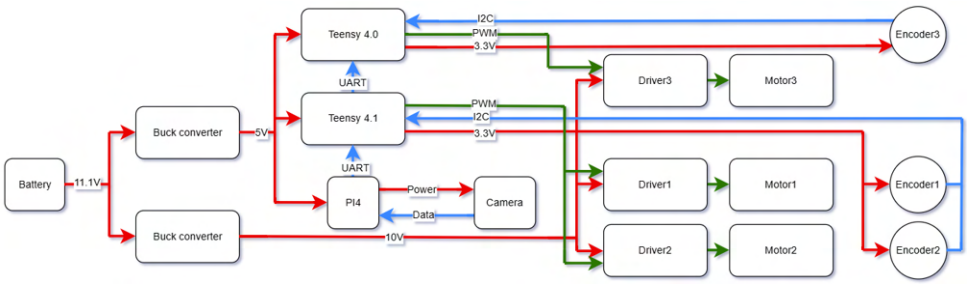

Figure 3.2: *Main electronic connection schematic.*

The Teensy 4.1 controls the two base BLDC motors via six pairs of PWM pins, where each pair shares the same timer. The Teensy 4.0 controls the central BLDC motor through three PWM pairs. The PWM signals go to the respective port on each of the three drivers. The ports must follow the specific high and low order described in the code. The drivers receive the signals from the Teensy boards and manipulate the amplitude up to the driver power supply voltage.

The encoders are connected via the I2C port to each Teensy, respectively, with their motors, which allows for quick communication and multiple devices on the same pins. This also allows the IMU to operate on the same I2C pins. The Teensy MCUs communicate with each other via UART connection, which enables fast and reliable data transfer both ways. Electrolytic and ceramic capacitors are used to reduce the noise going to the MCUs and driver boards.

4 | Gimbal Control

The control of this gimbal mechanism first requires solving its inverse kinematics, as it is a coupled system where turning a single motor can produce end-effector rotations about two frame axes. Furthermore, by solving the inverse kinematics, singularity points can be identified and avoided.

With the inverse kinematics known, the control strategy is discussed, from cascaded PID control to motor initialization and the final control loop.

Finally, with the stabilization control loop implemented, the computer vision is integrated to achieve colour-based object tracking.

4.1 | Inverse Kinematics

To control such a mechanism, inverse kinematics are necessary, as they can provide the required motor angles to obtain the desired orientation of the end-effector. While there are many papers covering this mechanism, finding a usable solution for the inverse kinematics proved to be challenging. This can be considered as a 2-DoF spherical parallel manipulator, with the third rotation controlled independently by the third motor. Its geometry can be defined by two revolute motor joints, three links, an end effector, and three free revolute joints.

Although it is possible to find a numerical solution see in Appendix D for these inverse kinematics, iterative methods require more computing power and time, thus reducing the bandwidth of the gimbal. Analytical solutions, however, can be implemented with minimal computational resources, as each angle can be expressed as an explicit function. A derivation for a similar inverse kinematics problem, though with a different frame orientation is solved in [19]. By introducing a 90° rotation around an IMU axis in the gimbal code, it is possible to use the said solution Equation 4.1, Equation 4.2. The inverse kinematics equation was first tested in Python code with the visualisation Appendix D. The error was calculated by finding the distance between the platform and the projection of the leg end points on the platform plane, where it provided a suitable solution with an error of less than 10^{-1}.

$$q_1 = \phi_1 \qquad or \qquad q_1 = \phi_1 - \pi \tag{4.1}$$

$$q_2^* = arctan(-tan(q_3) \cdot cos(q_1)) \qquad with \qquad q_2 = q_2^*, -q_2^*, \pi - q_2^*, \pi + q_2^*; \tag{4.2}$$

Where q_1 is defined as the motor rotation about the Z-axis, and q_2 as the motor rotation about the frame's X-axis, and the intermediate link $q_3 = \phi_2, \pi - \phi_2$ with ϕ_1, ϕ_2, ϕ_3 as roll, pitch and yaw respectively. In this prototype, due to the limited range to avoid cable entanglement, the conventions for q_1, q_2, q_3 can be expressed in $\phi_1, \pi - \phi_2, -q_2^*$.

The research at [19] also discusses singularity positions, where at $q_1 = \pm\frac{\pi}{2}$ and $q_2 = \pm\frac{\pi}{2}$, there are infinitely many end-effector orientations. This is currently prevented in the code by limiting the range of motion of the bottom motor to $-\frac{\pi}{2} < q_2 < \frac{\pi}{2}$.

4.2 | Computer Vision

The computer vision object tracking based on object colour is integrated using OpenCV. The goal of object tracking is to validate whether it is possible to integrate it into the mechanism and control system; thus, it does not perform any other functionalities. First, the camera is configured by setting the gains to reproduce real-life colours. Then, an HSV mask for a green object was created, and a minimum area was defined in order to filter out noise. After the image is taken, a binary mask is produced, where the green pixels are selected using the HSV mask. After the areas are filtered by size, they are enlarged to form unified objects. Afterwards, the contours are defined and the largest one is chosen as the object. A bounding box is drawn around the object, and the distance between it's and camera's center is set as output to the Teensy4.1 via UART connection.

4.3 | Control Strategy

The approach for the control of a camera stabilizing mechanism consists of multiple stages, from initialization to target tracking. The motors are controlled using the SimpleFOC library, which is well documented and has examples for BLDC motor control.

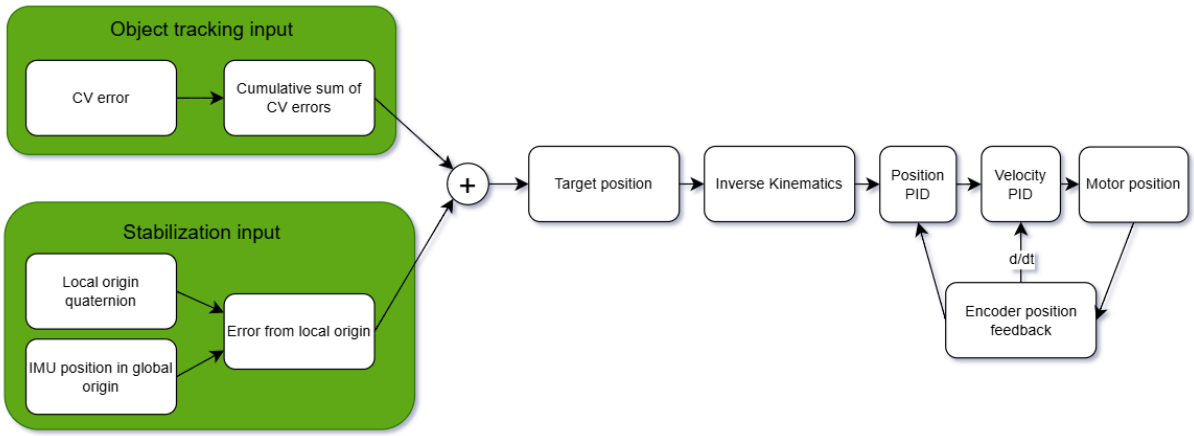

Figure 4.1: *Control loop schematic.*

The PID parameters for velocity and position for each motor are set using the SimpleFOC library [20]. For each motor, the PID values are slightly different. These values were obtained through iterative tuning and testing. The velocity PID achieves a smooth velocity even against larger disturbances, while with the position PID, the exact desired position can be followed.

On startup, the gimbal mechanism calibrates all motors with their respective encoders - this is a part of the SimpleFOC library initialization. With the motor positions known from the encoders, it is now possible to keep them in the predetermined boundaries to avoid physical contact between the parts, wire tangling, and singularity positions.

Afterwards, the IMU is initialized and the 9-DoF mode is turned on. With the initialized IMU, the loop for the motor control can be started. In the loop, the position calibration is done. First, the motors go to the zero position - Rx = Ry = Rz = 0. When the position is reached, the MCU reads the quaternion angles from the IMU and sets the output as the initial quaternion angles. These angles are not only saved as the origin, but also as the target angles for a simple stabilization loop.

Then, the initialization phase is set to end, on each loop in the microcontroller, the IMU orientation is read out as a quaternion.

$$q_{curr} = [w_c, x_c, y_c, z_c] \tag{4.3}$$

The relative orientation of the current position with respect to the initial position can be calculated by applying Hamilton multiplication for the initial positions conjugate and current position.

$$q_{rel} = q^*_{init} \otimes q_{curr} \tag{4.4}$$

The relative quaternion is then converted to Euler angles and set as the target. In the meantime, when the Raspberry Pi detects an object using computer vision, it sends the angle error between the center of the camera and the center of the object, calculated by:

$$angle = (\frac{pixel_offset}{frame_length}) \cdot Field_of_view \tag{4.5}$$

Afterwards, the error is cumulatively added up over each loop and expressed as Euler angles. These Euler outputs from IMU and computer vision are summed up and given as the target endpoint position for the inverse kinematics equation. After the end-effector angles are converted into desired motor rotations, they are input into the cascaded position and velocity PIDs. The position PID (outer) controls the motor's angular position. By comparing it to the target, it mainly controls the steady-state position error and the speed at which the motor reacts. The velocity control regulates speed by adjusting the voltage and current inputs via FOC, it also incorporates a low-pass filter and controls the motor's torque [20]. These PIDs form a smaller feedback control loop with the magnetic encoder on each respective motor.

5 | Results

A prototype of the gimbal mechanism was built as shown in Figure 5.1a. This section focuses on its validation and comparison with the requirements.

5.1 | Test Plan and Setup

To validate the design and its performance, a comparison was made with the initial requirements and tests were conducted for stabilization, orientation range, disturbance rejection, and object-tracking accuracy. Data for each test was recorded from the motor encoders, IMU, and camera.

For the orientation-range test, the gimbal mechanism was rotated in all directions while the camera was fixed on a steady target. The rotation angles were read out from the IMU on the frame to observe the rotation range the gimbal can achieve without losing the object.

There was no test setup prepared to test the bandwidth of the gimbal mechanism. A general test was done by shaking the gimbal using a timer, for which the stabilization capabilities were observed using a camera.

Stabilization error was measured by comparing inverse-kinematics commands to IMU readings. In the prototype, stabilization uses frame IMU data, which suffers from IMU error, device calibration and mechanical compliance. For this test, the frame IMU was temporarily mounted on the end-effector, which allowed to see the difference between where the frame-mounted IMU would think the end-effector is and where the inverse kinematics orient it. Afterwards, the difference between the inverse kinematics control output and the IMU output was observed for various motor rotations.

Finally, to assess computer-vision static error, a step input was provided to the camera, and the resulting camera position was recorded and plotted over time.

5.2 | Costs

The prototyping costs came in at almost 350€ (Appendix C), exceeding the preferred 200€. The primary factor was the use of separate microcontrollers for motor control. This should be substituted with a unified controller, either an STM32 MCU or a custom one. That change, along with cheaper drivers and an external power supply, would reduce costs enough to reach the target.

5.3 | Size

The gimbal fits in a box measuring $10 \times 7 \times 10$ cm through the full motor rotation range, which satisfies the initial requirements even with motors larger than those in the ideal design.

5.4 | General Gimbal Design Validation

The gimbal motors can rotate the links and the end-effector through the full range of the initially described positions without physical interference. The electronics function as expected, and the software performs both stabilization and computer-vision object tracking. Mechanically, the gimbal can perform location scanning; however, that function is disabled in the control software due to weak wiring.

5.5 | Orientation Range

The inverse-kinematics controller achieved end-effector rotations of approximately $\pm 80°$ in pitch and $\pm 120°$ in both roll and yaw. These ranges satisfy the 90° minimum requirement specified in the introduction. However, a full continuous sweep is not recommended with the current wiring, because the camera cable becomes entangled. Adding slip rings would enable a much larger rotation range with the same mechanical design.

5.6 | Frequency Response

Although no precise frequency-input mechanism was used, the control loop shows preformance degradation above 3 Hz and likely cannot stabilize at 10 Hz. This limitation stems from suboptimal PID tuning and IMU latency, which could be improved by using a higher-quality orientation sensor.

5.7 | Stabilization Error

Stabilization error increases with end-effector displacement Figure 5.1b: starting at 0.02 rad error at 0 rad displacement and rising to 0.1 rad error at 0.8 rad displacement from center. This is due to mechanical compliance, assembly misalignments, and IMU inaccuracy/drift.

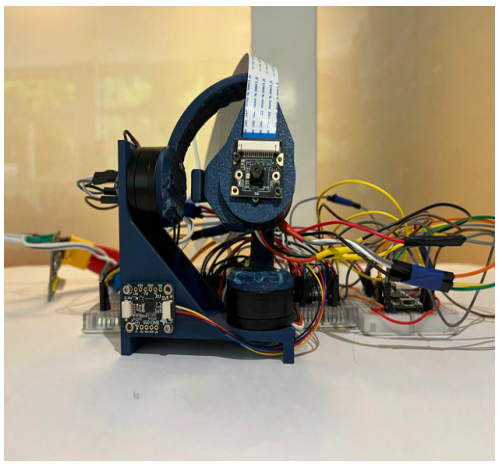

(a) *Final gimbal prototype.*

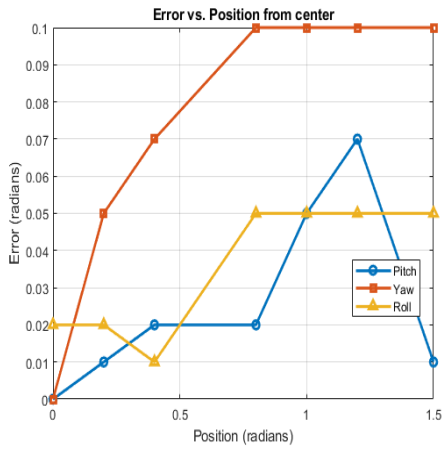

(b) *Error at different gimbal positions.*

Figure 5.1: *Gimbal error plots.*

5.8 | Object Tracking Error

While the object-tracking error often remained within 3°, the camera exhibited multiple oscillations before settling. The static error is due to noise filtering, which suppresses small-angle inputs. The oscillations arise because the camera control uses cumulative summation with significant latency, and small errors continue to accumulate after an overshoot. A more robust control scheme should be implemented to mitigate these effects.

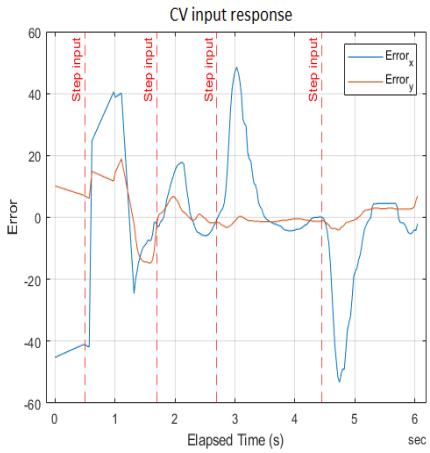

(a) *Step object-tracking input error slow.*

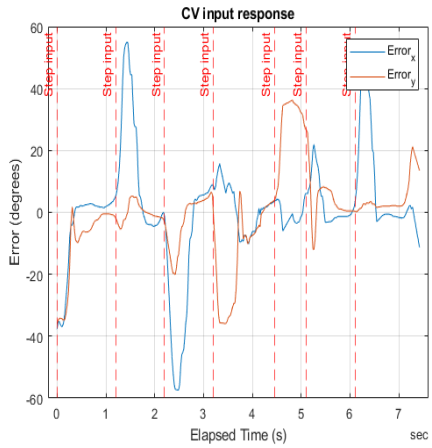

(b) *Step object-tracking input error fast.*

Figure 5.2: *Gimbal error plots.*

5.9 | Result Summary

To summarize, the gimbal's cost exceeds the preferred budget but could be reduced for a final product. The size and orientation-range requirements are fully met, while the frequency response falls short due to IMU lag and slow control. The stabilization error is larger than the desired 0.05 rad, whereas the static computer-vision error meets specifications. The computer-vision settling time is around 2 s too high but improvable to under 1 s with proper damping.

6 | Future Improvements

During the project, a gimbal prototype was built and tested, showing areas of improvement in the mechanical design, electronics, control and software

6.1 | Mechanical Design Improvements

The current design validates the system geometry, control, and software; however, Faulhaber 1509B motors would be preferable for a refined mechanism, as they are lighter and can achieve higher bandwidth stabilization. Furthermore, the Faulhaber motors weigh more than 4 times less and with more than around 2 times lower diameter and length Table 3.2. While their torque is also lower, the reduced moments of inertia as seen in subsection C.1 allow for a higher bandwidth control and much smaller overall system size.

While 3D-printed PLA parts facilitated rapid prototyping, a production version should use smaller components manufactured from carbon fiber to reduce inertia, increase reaction speed and stiffness. Revolute joints can be optimized by employing stiffer interfaces, ensuring more precise alignment, or adopting flexure-based joints to minimize play and enhance stiffness in non-revolute directions.

For volume production, a Design for Manufacturing and Assembly (DFMA) approach should be adopted to lower per-part cost, reduce manufacturing time, and simplify assembly. Easy-to-install interfaces are essential for robot integration, the current robotic platforms can be analyzed, choosing optimal connection points and methods. Rubber or elastomeric dampers should be incorporated at attachment points to attenuate high-frequency noise from both the motors and external sources.

The stabilization mechanism can be adapted to fit various use cases, by increasing the size of the gimbal and the motors, it can be tuned to work with different camera sizes, disturbance frequencies and geometries.

6.2 | Electronics and Power System Enhancements

Each motor's magnetic encoder could be miniaturized by using an off-axis AS5600 sensor on a custom circular PCB, reducing the bulk of each motor assembly and simplifying mechanical integration.

A custom driver board paired with a single STM32-class MCU (or a bespoke microcontroller with at least nine complementary PWM channels) would eliminate the dual-MCU architecture, reducing cost and communication latency. Custom PCBs for the entire electronics stack replacing breadboards and discrete wiring would enhance reliability, significantly reduce enclosure volume, lower signal noise, and streamline cable routing.

Although the BNO055 IMU provided basic orientation feedback, its drift and noise sensitivity limit dynamic performance. A higher-grade IMU would improve stability and accuracy. Routing wires for the IMU, encoders, and camera through the hollow shafts of the BLDC motors, and using thinner, more flexible wiring for end-effector connections, will prevent cable snags and minimize parasitic stiffness. Alternatively, slip rings can be introduced at the joints, allowing for infinite rotation, with the drawbacks of design complexity and additional friction.

6.3 | Software and Control Improvements

First, an adaptive control algorithm can be implemented to automatically tune PID gains and optimize stabilization performance across varying disturbance profiles. Going a step further, the control system can be determined from the dynamic model of the gimbal, accounting for friction, joint masses and inverse kinematics.

Instead of limiting motor travel to avoid singularities, a more advanced kinematic strategy could preserve the full range of motion while steering clear of singular configurations.

Finally, refining the PID structure, incorporating feed-forward terms and shaping smoother velocity trajectories will reduce overshoot and oscillations, yielding a more critically damped response for large gimbal manoeuvres.

6.4 | Testing setup

To achieve rigorous and repeatable disturbance rejection measurements for proper design tuning and evaluation, a test setup should be used.

6.4.1 | Dynamic model

A parametrized simulation can emulate both the mechanical dynamics of the mechanism and the control loop. By having such a model, the theoretical limits of the design can be achieved, control loop can be tuned. It also allows testing the model against step and sinusoidal inputs, where the reference torques from the disturbances are injected, and the camera angle output is recorded. From this data, Bode plots can be generated to extract the bandwidth, gain and phase margins of the system. Such a simulation can be used to validate other motor choices, find the system's bottlenecks and optimize the geometry for minimal weight and size. In summary, a model is a useful tool in optimizing the gimbal components, control loop and documenting the validation of the system.

6.4.2 | Turntable shaker

The real-life model does not fully represent the model due to friction, play and assembly quality. A small, programmable turntable allows for a controlled testing environment for the gimbal. Similar to the dynamic model, it helps both to optimize and validate the stabilization with real-world inaccuracies. The turntable will provide the predefined inputs to achieve step, sinusoidal and randomized frequency responses.

6.4.3 | Object tracking setup

To test the object tracking capabilities, the gimbal can be set up with a screen that can test its object detection and tracking capabilities. The inputs can be read from the screen and the gimbal to get the response function, from which the object tracking control can be optimized.

6.5 | Project continuation

Building on the validated gimbal architecture, the next phase will focus on refining the control loop to achieve the required stablization bandwidth of at least 10 Hz. First, a dynamic model for the mechanism will be made in MATLAB, from which both the feed-forward and feedback terms can be computed. Then, the system will be systematically tested with the turntable inputs at multiple orientations, fine-tuning the control to perform with real-time assembly inaccuracies. After the refined system is validated, the small final version will be made using the Faulhaber 1509b motors. To fullfill the integration requirements, the custom PCB will be produced, and the assembly will be manufactured with higher tolerances and lighter materials. Finally, the final gimbal mechanism will be tested for the required performance characteristics, and the computer vision and stabilization will be demonstrated on a robotic platform.

7 | Conclusion

The goal of this project was to design, build, and validate a compact 3-DoF camera stabilization gimbal. In the project, a 3-DoF gimbal was developed using a hybrid direct-drive and spherical-parallel architecture. Theoretically, the design minimizes the inertias felt by the motors, allowing higher-bandwidth control with the same setup as a purely direct-drive gimbal. An ideal version of the design was proposed; however, the prototype was built with off-the-shelf parts. The system also avoids any play inherent in belt or geared systems while remaining smaller than a conventional direct-drive gimbal.

Most of the performance requirements for the gimbal mechanism were not achieved with the initial prototype; however, with the suggested future improvements, the requirements should be met. First of all, the cost of the prototype was around 300€, meeting the upper budget limit but exceeding the preferred 200€. This overrun was due to the battery choice and dual-MCU implementation. The stabilization bandwidth fell below 3 Hz, far from the 10 Hz target, due to suboptimal PID tuning and mechanical compliance in the gimbal. The mechanism's range fulfilled the desired positions; however, a full 360° sweep is not recommended due to cable entanglement. The vision-based object tracking maintained errors within 3°, partly due to noise filtering, but exhibited long settling times of up to 2 s because of underdamped control.

These shortfalls are more attributable to assembly and control quality than to the choice of gimbal topology. While the chosen architecture requires more complex control, the mechanical assembly underperformed due to the materials used and time constraints. By producing stiffer and more refined mechanical components, enhancing the control algorithms, and implementing improved sensing, the gimbal architecture can meet the specified cost and dynamic-performance requirements for agile robotic applications.

References

[1] S. Bazeille, J. Ortiz, F. Rovida, *et al.*, "Active Camera Stabilization to Enhance the Vision of Agile Legged Robots", *Robotica*, vol. 35, no. 4, pp. 942–960, 2017. DOI: 10.1017/S0263574715000909.

[2] W. Guilluy, L. Oudre, and A. Beghdadi, "Video stabilization: Overview, challenges and perspectives", *Signal Processing: Image Communication*, vol. 90, p. 116 015, 2021, ISSN: 0923-5965. DOI: https://doi.org/10.1016/j.image.2020.116015. [Online]. Available: https://www.sciencedirect.com/science/article/pii/S0923596520301697.

[3] D. Kowal, "Considerations for opto-mechanical vs. digital stabilization in surveillance systems", in *Infrared Technology and Applications XLI*, ser. Proceedings of SPIE, vol. 9451, SPIE, 2015. DOI: 10.1117/12.2178123.

[4] M. Verma, V. Lafarga, M. Baron, and C. Collette, "Active stabilization of unmanned aerial vehicle imaging platform", *Journal of Vibration and Control*, vol. 26, pp. 1791–1803, Feb. 2020. DOI: 10.1177/1077546320905494.

[5] MAB Robotics, *Motion Control Technology — MA-d Direct Drive*, Application note on direct-drive gimbals, 2023.

[6] Authors, "Direct Drive Hands: Force-Motion Transparency in Gripper Design", in *RSS Workshop or Conference*, Illustrates direct-drive pros/cons, 2015.

[7] S. Ansari-Rad, M. Zarei, G. Mehran, S. M. Nejati, and A. Kalhor, "Stabilization of a Two-DOF Spherical Parallel Robot via a Novel Adaptive Approach", in *Proceedings of RSI Int. Conf. Robotics and Mechatronics*, 2019, ...

[8] H. Hong, A. Jabran, and L. Ren, "A Review on Topological Architecture and Design Methods of Cable-Driven Mechanism", *Advances in Mechanical Engineering*, vol. 10, no. 5, pp. 1–14, 2018. DOI: 10.1177/1687814018774186.

[9] Y. Wu and X. Deng, "A Review on Topological Architecture and Design Methods of Cable-Driven Parallel Robots", *Robotica*, vol. 36, no. 9, pp. 1–21, 2018, Example cable-driven mechanisms discussion; adjust pages when known. DOI: 10.1017/S0263574718000821.

[10] M. M. Lafifi and ..., "Investigation into the Robust Modelling, Control and Simulation of a Belt Drive Mechanism", in *Proc. IEEE XYZ Conf.*, Verify full details, 20xx.

[11] H. Yin and Y. Zhao, "Current Trends and Prospects in Compliant Continuum Robots", *Machines*, vol. 10, no. 7, p. 145, 2022. DOI: 10.3390/machines10070145.

[12] B. Danaei, M. A. Sormoli, A. Arian, and A. Kalhor, "Control of a Two Degree-of-Freedom Parallel Robot as a Stabilization Platform", in *Proceedings of the 5th RSI Int. Conf. Robotics and Mechatronics (IcRoM)*, 2017, pp. 1123–1128.

[13] iFlight, *iPower GM2804 gimbal motor*, Available from iFlight website, 2025.

[14] Maxon, *Maxon ECX 22 S flat gimbal motor*, Available from iFlight website, 2025.

[15] Faulhaber, *Series 1509B Flat Brushless DC Motor Datasheet*, Available from Faulhaber website; rotor inertia and torque specs, 2025.

[16] Orbex, *Orbex 100500 Gimbal motor*, Available from Orbex website, 2025.

[17] AMS AG, *AS5600 Contactless Magnetic Rotary Position Sensor Datasheet*, https://www.mouser.com/pdfdocs/AMS_AS5600_Datasheet_EN.PDF, Rev. 1.3; Accessed: 2025-06-11, 2018.

[18] B. Sensortec, *BNO055 Absolute Orientation Sensor Datasheet*, Available from Bosch Sensortec website, 2016.

[19] S. Mghames, M. G. Catalano, A. Bicchi, and G. Grioli, "A spherical active joint for humanoids and humans", *IEEE Robotics and Automation Letters*, vol. 4, no. 2, pp. 838–845, 2019. DOI: 10.1109/LRA.2019.2893423.

[20] SimpleFOC community, *SimpleFOC: Open-source Field Oriented Control library for BLDC motors*, GitHub repository: https://github.com/simplefoc/Arduino-FOC, 2022.

A | Appendix A

A.1 | Disturbances and Movements

For the specific purpose of the gimbal mechanism concerning this BEP project, the requirements can be specified even further. To start off, the moving mechanism of the whole robot can be simplified to the translation and rotational inputs on the X, Y and Z axes. These inputs come from the robot's movement and disturbances. The same can be done for the camera, which is put on the wrist of the robot. While the hand on the robot arm can be modelled as a disturbance input.

The Mini-Cheetah robot can do up to 12 steps per second when running at the highest speed, which would result in stride frequency f of 10-15 Hz, similar frequencies are also observed for dynamic platforms in [1]. To simplify things further, the rotational disturbance can be modelled as a sinusoid Equation A.1. With the maximum rotation of $\theta_{max} = 10°$.

$$\theta(t) = \theta_{max} \sin(2\pi f t) \tag{A.1}$$

For the bipedal robot, the input disturbance is generally of a lower frequency f = 1-4 Hz and the maximal angle $\theta_{max} = 5°$. The frequency is lower due to the larger steps, while the small angle change is due to the built-in balancing of the bipedal robot.

For a wheeled robot like a robot based on a hoverboard, disturbance inputs from the uneven road can be approximated to have a low frequency f = 2-6 Hz. While the angle of these inputs is very small compared to other robots $\theta_{max} = 2°$.

In all of the robots, there are higher frequency vibrations which come in at around 100-500 Hz, coming from the actuators and structural vibrations from impacts. While these frequencies can be a sufficient approximation, for a final design solution, the frequencies should be measured using an accelerometer on the actual robot.

Additionally, the robots have to be able to achieve large angles in all directions, as the tests done on legged robots often require fall recovery, and the robot arm can provide very large rotations. At least $\alpha = 90°$ angle is required for the gimbal to be suitable for these systems.

A.2 | Market Analysis

To find the size and weight requirements, the gimbal mechanisms currently available are analyzed, in Table A.1 some of the gimbal examples are listed. In general, the size of a gimbal mechanism is around 10 x 10 x 12 cm, and the weight of 150+ grams. While there are some outliers, they are not common and are difficult to replicate with easily obtainable parts.

Model	Size (L×W×H)	Weight	Price (EUR)
3 Axis Arducam AR0234 Camera Micro Brushless Gimbal	11 x 11 x 14 cm	300g	470.50
SIYI A8 mini 4K 8MP Ultra HD 6X Digital Zoom Gimbal	5.5 x 5.5 x 7 cm	95g	233.96
3 Axis Arducam Owlsight Micro Brushless Gimbal	11 x 11 x 14 cm	300g	470.50
3 Axis DJI O3 Camera Micro Brushless Gimbal	11 x 11 x 14 cm	300g	445.50
3 Axis Flir Vue Micro Brushless Gimbal	11 x 11 x 14 cm	185g	445.75
FeiYu Tech Mini 3D 3-Axis Brushless Gimbal for Multi-Rotor and Aircraft	12 x 7.6 x 8.8 cm	149g	141.14

Table A.1: *Micro 3-DoF gimbals for drone/robot mounting, prices in EUR*

B | Appendix B

In this appendix section, different gimbal topologies are described.

B.0.1 | Direct Drive Gimbal

It is the most popular gimbal system used with cameras; thus, it has many resources and is quite easy to produce. The strength of this system is that it does not rely on gears or belts, which avoids any unwanted slip, play, virtual play and backlash. Furthermore, the system can have a wide range of motion, as long as the wires are not tangled up together. Thus it can provide a 360-degree turn in each direction.

The disadvantage of this type of system is that it takes up quite a lot of space, which goes against the requirements of this project. Furthermore, in this system, the inner motors can be far away from the center of rotation of the outer motors, which results in high moments of inertia ($I = \sum m_i r_i^2$) due to the quadratic relation between distance from the center of rotation and the motor. This requires more torque from the motors to achieve high speeds and accelerations, which in turn requires larger motors.

The design of such gimbal is simple, it has very few moving parts allowing for low manufacturing cost and simple assembly.

Figure B.1: *Direct drive gimbal.*

Overall, this design is a solid choice; however, due to the amount of space it takes and the non-optimal layout of the motors around the axis of rotation, it could be improved.

B.0.2 | Gear Gimbal Mechanism

To reduce the inertia, gears can be used to transfer the movements from the motors to the camera, without rotating the motors themselves. In Figure B.5 gears are used to transfer the movement from the 3 motors at the base, to the plate at the top. With this setup, 3 different rotations can be achieved. This design allows for low loads on the motors, as the camera and camera holding parts can be very light in comparison with the motors themselves. Furthermore, this reduces any wiring problems; however, the range of motion can be limited depending on the structure, and the size varies a lot between designs. Furthermore, it has both gears and bearings, which introduce play and backlash. In a system with requirements for smooth and high-speed motions, these effects are undesired.

Another solution could be to use the 2-DoF control with gears Figure B.6 with an additional motor at the platform, which rotates. This design would take up less space than the Figure B.5; however, now, along with the problems coming from gears, there will be a motor at the top, which will be rotated by the two motors at the base. This motor would have to be at a distance from the axis of rotation, which provides higher moments of inertia.

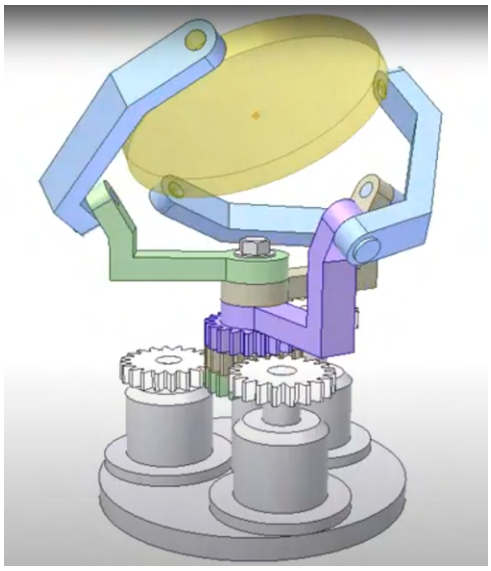

Figure B.2: *Geared gimbal example.*

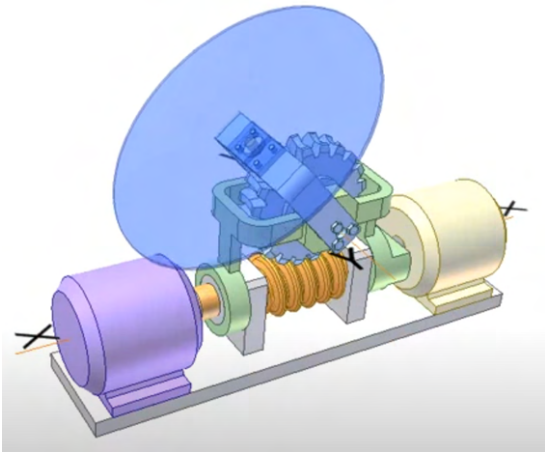

Figure B.3: *Smaller geared gimbal example.*

Overall, the geared designs provide a very interesting solution to reduce the moment of inertia around the motor's axis of rotation. Unfortunately, fundamentally, these designs introduce play and backlash to the system due to the use of gears. Furthermore, the designs can get quite bulky and have a reduced range of motion when compared to a simple gimbal.

B.0.3 | Belt Gimbal Mechanism

A lot of the unwanted mechanical properties produced by geared mechanisms could be avoided by using belts. For example, if in Figure B.5 the gear couplings were exchanged with belts, the play and backlash would be reduced. Furthermore, any additional noise and weight coming from the gear connections could be eliminated. Belts, however, come with their disadvantages; they can be difficult to work with as they require tensioning, and they have virtual slip, which means that the input may not transfer completely to the output as the belt might slip or extend. For low torque applications such as this one, the belts would be better than gears.

B.0.4 | Compliant Gimbal Mechanism

To remove all of the play and virtual play, a compliant mechanism system could be used. Using a 2-DoF flexure system and an additional motor at the tip of the system to produce the 3rd rotation could be considered. While this improves the system in terms of the backlash, the contraption is quite large, and the range of motion is very small.

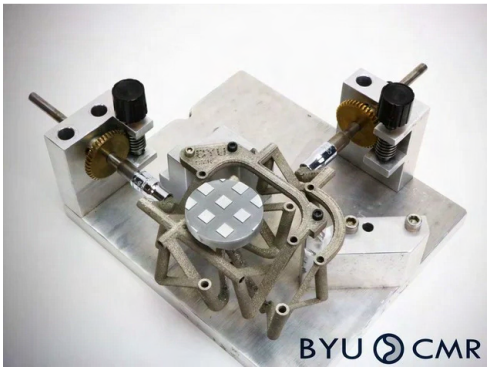

Figure B.4: *A compliant 2-DoF manipulator.*

B.1 | Parallel Spherical Mechanism

Both the 2-DoF and 3-DoF parallel spherical mechanisms excel in eliminating any play or virtual play from transmission as the power is transmitted directly through bearing linkages. SPM design also allows for placing the motors at the structure's base, which significantly reduces the loads on the motors. Finally, the configuration increases the stiffness of the mechanism, uses simple parts, reducing the manufacturing difficulty, and a 2-DoF SPM also allows for a smaller size.

Figure B.5: *3-DoF Spherical Parallel Manipulator.*

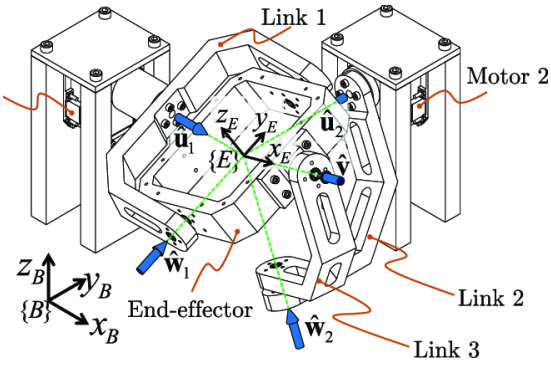

Figure B.6: *2-DoF Spherical Parallel Manipulator.*

However, some downsides of the design include the more complex kinematics, coupled control, and more complex assembly at a low size.

C | Appendix C

C.1 | Torque Requirements

The angular acceleration for the robot can be approximated as a sinusoidal function, with the frequency of robot disturbances and the amplitude of the maximum rotation due to disturbances.

$$\alpha = \ddot{\theta} = \frac{d^2\theta}{dt^2}\theta_{max}\sin(2\pi f \cdot t) = \theta_{max} \cdot (2\pi f)^2 \sin(2\pi f \cdot t) \tag{C.1}$$

The acceleration is highest when the sine function is 1, thus:

$$\alpha = \theta_{max} \cdot (2\pi f)^2 \tag{C.2}$$

The highest boundary values for each type of robot are then described by:

$$\alpha_{cheetah} = 10 \cdot \frac{\pi}{180} \cdot (2\pi \cdot 10)^2 = 670[rad/s^2] \tag{C.3}$$

$$\alpha_{cheetah} = 5 \cdot \frac{\pi}{180} \cdot (2\pi \cdot 4)^2 = 55.1[rad/s^2] \tag{C.4}$$

$$\alpha_{cheetah} = 2 \cdot \frac{\pi}{180} \cdot (2\pi \cdot 6)^2 = 49.6[rad/s^2] \tag{C.5}$$

For the first motor, the torque requirement comes from turning the camera itself and pulling the cables. From the Raspberry Pi camera V2 datasheet, the mass of the camera is 3 g, The torque for the central motor can be calculated by taking multiplying the angular acceleration of the fastest robot with the moment of inertia of the camera, leading to a very low required torque, thus the central motor can be as small as possible.

$$I_{camera} = \frac{1}{12}M(a^2 + b^2) = \frac{1}{12}0.003(0.0025^2 + 0.0024^2) = 3 \cdot 10^{-7}[kg \cdot m^2] \tag{C.6}$$

$$T_1 = I_{camera} \cdot \alpha_{cheetah} = 3 \cdot 10^{-7} \cdot 670 = 4.648 \cdot 10^{-4}[Nm] \tag{C.7}$$

The moment of inertia felt by motors 2 and 3 is calculated similarly, with the biggest part of the mass coming from motor 1 in the middle, followed by smaller masses of the links, camera, and other small pieces provide negligible moments. The moment of inertia of motor 1 can be modelled as a cylinder; however, the mass and size depend on the model itself, for, thus the final value has to be approximated for each motor setup. Required power for the base actuators using the GM2804 setup can be calculated as:

$$I_{GM2804} = \frac{MR^2}{4} + \frac{Ml^2}{12} = \frac{0.051 \cdot 0.0175^2}{4} + \frac{0.051 \cdot 0.015^2}{12} = 4.17 \cdot 10^{-6}[kg \cdot m^2] \tag{C.8}$$

$$T_{2-3} = I_{GM2804} \cdot \alpha_{cheetah} = 4.17 \cdot 10^{-5} \cdot 670 = 0.00279[Nm] = 2.79[mNm] \tag{C.9}$$

.

Thus, each motor using the GM2804 motor combination would have to have at least 2.79mNm torque. For this setup, by adding the frame parts, the motor would be at its limits when working with maximum disturbance at maximum frequency. Thus, the GM2804 may not be ideal.

The same can be calculated for other motors, leading to:

$$T_{Faulhaber1509b} = 0.096mNm \tag{C.10}$$

$$T_{MaxonECX22} = 0.87mNm \tag{C.11}$$

$$T_{Orbex100150} = 0.16mNm \tag{C.12}$$

These motors are theoretically better for such a gimbal system, as the frame can also be scaled down.

C.2 | 2-DoF vs 3-DoF

The most important hardware pieces are the gimbal itself, camera setup, camera choice, motors, computer/microcontroller and sensors.

The choice of gimbal system can be made between 2-DoF and 3-DoF, with the main trade-offs between them being the stabilization quality and system complexity.

2-DoF gimbal:

- Pros:
  - Simpler design for easier manufacturing and design of the control algorithm.
  - Low weight for easier integration to various robots with small changes to their center of gravity. Mostly important for flying mechanisms like drones and planes.
  - Smaller size allows for integration in smaller robotic systems, allowing for more aerodynamic integrations.
- Cons:
  - Does not account for yaw, which is critical for dynamic and non-ideal environments.

3-DoF gimbal:

- Pros:
  - Stabilizes rotations for all axes, allowing integration in more dynamic robotic systems.
  - Provides better video quality for the computer vision system while moving in complex environments.
- Cons:
  - Higher mechanical complexity leading to higher weight and size.
  - Increased control system complexity takes up more time in the development process.
  - Higher cost of the system, as it requires more motors.

Overall, for this project, a 3-DoF system is chosen, while it may result in higher price and complexity, the increased video quality for the computer vision and better multi-platform integration due to the stabilization for the yaw are more important, as it is the main goal for the project. Furthermore, the design can always be made simpler by removing a single degree of freedom; however, adding additional degrees of freedom is more difficult.

C.3 | Assembly

Knowing the components used, the initial concept was detailed to accommodate the chosen parts. The initial design used friction-fit parts, as they are easy to print and test. The design was fully constructed and used in the demo. The design itself had many flaws; the stiffness of the links was small, resulting in vibrations and poor alignment. The friction-fit joints often pop out and have play, which results in more difficult motor control and extra jitter.

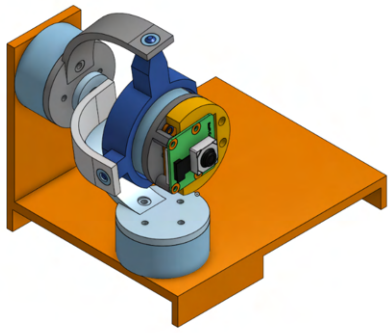

Figure C.1: *First Concept model.*

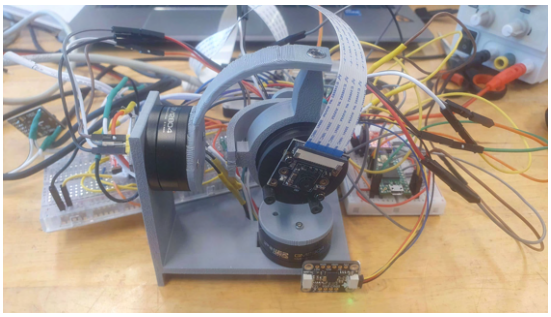

Figure C.2: *First concept full assembly.*

The design was used for testing the control system. During the testing period, all of the possible improvements were noted down and implemented in the final concept. The biggest improvement was the change from friction-fit joints to heat inserts, as they provide more stiffness and robustness.

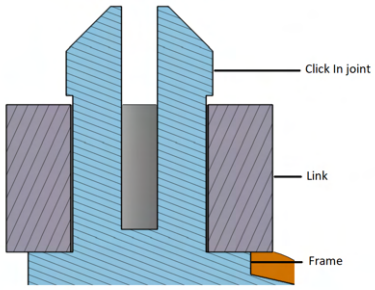

Figure C.3: *Initial Click In joint.*

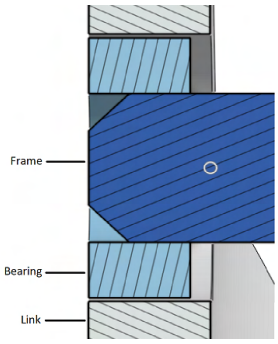

Figure C.4: *Friction fit joint with a bearing.*

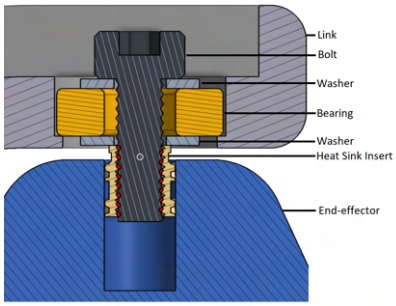

Figure C.5: *Final joint with heat sink insert.*

Another improvement was stiffer links, as the stiffness of the gimbal was lacking. This was done by implementing an open box design instead of pure links. Using an open box allows for saving weight, while increasing the stiffness in the required axial direction.

Figure C.6: *Old link model.*

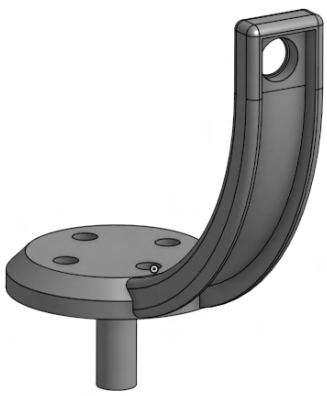

Figure C.7: *New link model.*

C.4 | Costs

The component cost breakdown can be seen in Table C.1, where the main components used in the gimbal are listed out. The price does not include prototyping parts such as wires, breadboards, soldering, XT90 battery connectors heatshrink, heat inserts and PLA for 3D printing. However, it represents the largest part of the gimbal cost.

Component	**Unit Price (EUR)**
3× iPower GM2804 Gimbal Motor	3 × €26.90
BNO055 9-DOF IMU (Adafruit BNO055 STEMMA QT)	€33.26
3× Brushless Motor Driver (SparkFun TMC6300 breakout)	3 × €21,95
3× AS5600 Magnetic Encoder Module	3 × €3.00
Gens ace G-Tech Soaring 2700mAh 11.1V 30C 3S1P LiPo Battery	€29.99
Buck converter 7–24V to 5V 4A (DFRobot DFR0831)	€6.00
Buck Converter QSKJ DC-DC Adjustable Step-down XL4005 5A	€3.50
Teensy 4.0 with soldered headers	€28.50
Teensy 4.1 with soldered headers	€40.00
Waveshare IMX219 Camera Module for Raspberry Pi 5 - 8MP - 120°	€17.50
Total (approx.)	**€300**

Table C.1: *Cost breakdown of components.*

It is clear that the price is larger than a typical gimbal on the market; however, it is possible to reduce the price of the final gimbal by up to twice. First of all, the components such as the battery and buck converters are optional, as the gimbal can be powered directly from the power sources of the robotic platform.

Other costs for the gimbal come from the motor control. While the motors themselves are on the cheaper side, the electronics required to use them can get expensive. Moving away from the prototyping, a single unified driver board can be used. Furthermore, the double MCU architecture is redundant and could be exchanged for a more complicated controller with enough complementary PWM pairs.

D | Control

D.1 | Numerical Inverse Kinematics

First of all, a numerical solution for the inverse kinematics was found using an iterative method on Python. To check this solution, a geometry visualization was made Figure D.1 with the correct revolution joints. This allowed us to show that the numerical solution is correct. Implementing the numerical solution in C++ on Arduino IDE turned out to be unfruitful, as the same libraries did not exist, and the result could not be easily replicated. Furthermore, such an iterative method is very slow compared to an analytical solution, which would introduce lag and jitter in the gimbal's movements.

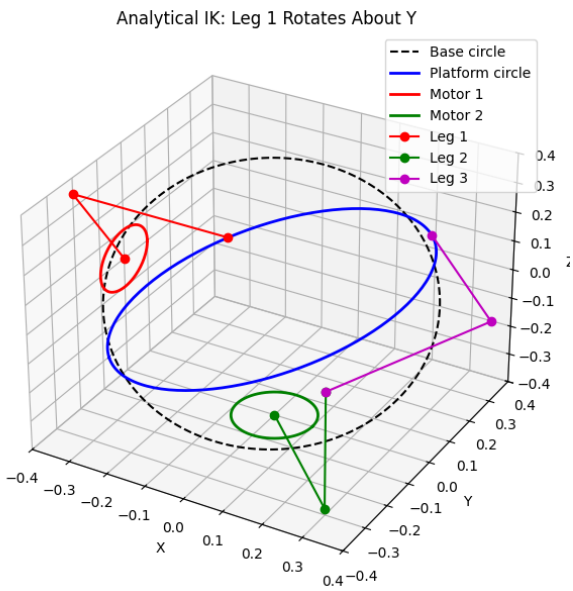

Figure D.1: *Geometrical visualization of the gimbal mechanism.*