Figure 2-4.3 KHC-12(14,16)RY3 wiring diagram (continued)

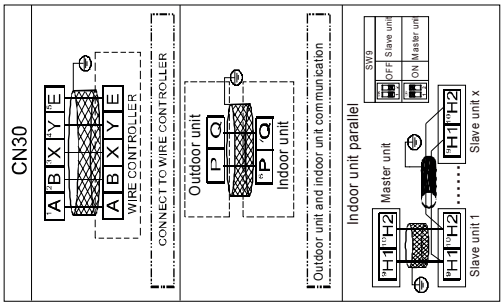

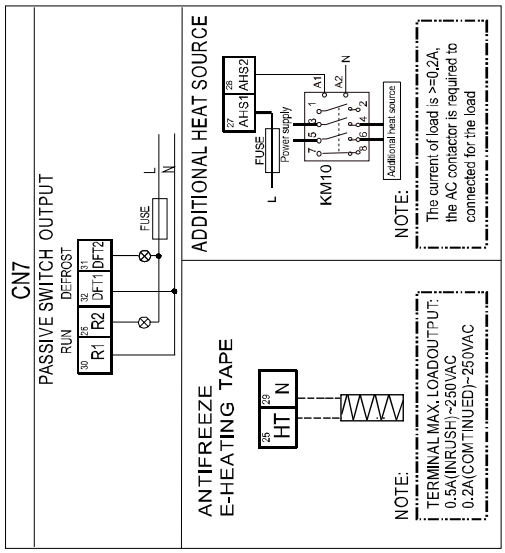

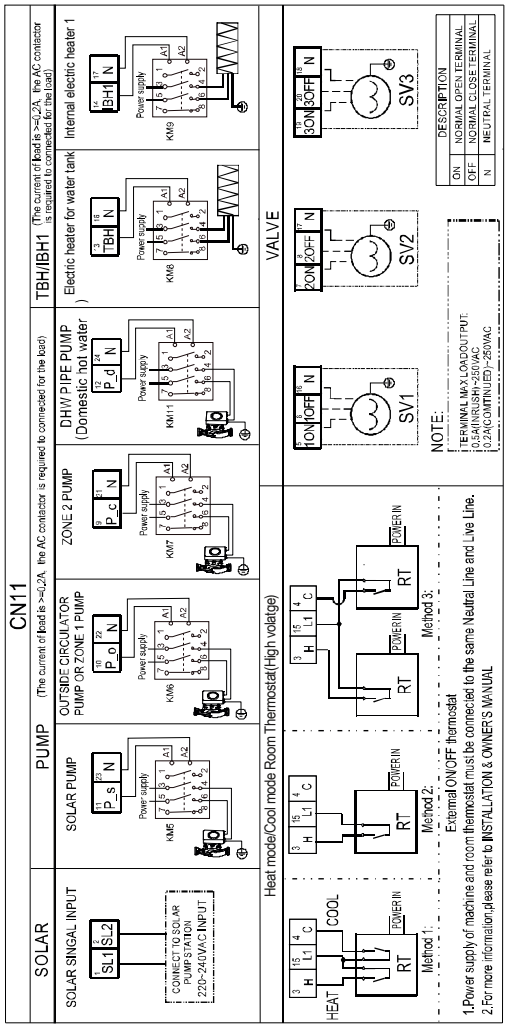

CN35--SMART GRID		
Operating behavior	EVU	SG
Increased operation output	ON	ON
	ON	OFF
Normal operation	OFF	ON
Decreased operation output	OFF	OFF

Temp.sensor code	Property values
T2/T2B	$B_{25/50}$=4100K , $R_{25℃}$=10kΩ
T1/TW_out TW_in/T5/Tw2	$B_{0/100}$=3970K , $R_{90℃}$=17.6kΩ

Temp. Sensorcode	Propety values
T3/T4/Th	$B_{25/50}$=4100K, $R_{25℃}$=10kΩ
Tp	$B_{25/50}$=3950K, $R_{90℃}$=5kΩ

CODE	NAME
AHS	Additional heat source
DHW	Domestic hot water
EVU	Commercial power
FS	Flow switch
HT/CL	Heat mode/Cool mode(thermostat)
KM5-KM11	AC Contactor
M1/M2	Remote switch
PUMP	Variable speed pump
P_c	Zone 2 pump(field supply)
P_d	DHW pipe pump (field supply)
P_o	Outside circulator pump (field supply) or Zone 1 pump (field supply)
P_s	Solar pump
SG	Solar energy
SV1~3	Motorized 3-way valve (field supply)
T2, T2B, TW-in, TW-out, T1, Tbt1, Tbt2, T5, Tw2, Tsolar	Temperature sensor

CODE	NAME
COMP	Inverter compressor
EEV1/2	Electric expansion valve
FAN_UP/DOWN	DC fan motor
HEAT1/HEAT2	Crankcase heating
H_PRO/L_PRO	High/Low pressure switch
H-SEN	High pressure sensor
XT1	Big 4-phase terminal
CT1	AC current transformer
RA	Reactor
STF1/STF2	4-way valve
SV5/SV6	Solenoid valve
T3/T3A	Piping temperature sensor
T4	Outdoor ambient temperature sensor
T5	Inverter compressor discharge temperature sensor
TP	Compressor exhaust temperature sensor
TH	Compressor return temperature sensor