Qualcomm

RF360
Europe GmbH

Data sheet

SAW RF filter

Short range devices

Series/type:	B2636
Ordering code:	B39871B2636P810
Date:	December 19, 2019
Version:	2.0

DCN: 80-PA243-440 Rev. A

RF360 products mentioned within this document are products of RF360 Europe GmbH and other subsidiaries of RF360 Holdings Singapore Pte. Ltd. (collectively, the “RF360 Subsidiaries”).

RF360 Europe GmbH, Anzinger Str. 13, München, Germany

© 2019 RF360 Europe GmbH and/or its affiliated companies. All rights reserved.

These materials, including the information contained herein, may be used only for informational purposes by the customer. The RF360 Subsidiaries assume no responsibility for errors or omissions in these materials or the information contained herein. The RF360 Subsidiaries reserve the right to make changes to the product(s) or information contained herein without notice. The materials and information are provided on an AS IS basis, and the RF360 Subsidiaries assume no liability and make no warranty or representation, either expressed or implied, with respect to the materials, or any output or results based on the use, application, or evaluation of such materials, including, without limitation, with respect to the non-infringement of trademarks, patents, copyrights or any other intellectual property rights or other rights of third parties.

No use of this documentation or any information contained herein grants any license, whether express, implied, by estoppel or otherwise, to any intellectual property rights, including, without limitation, to any patents owned by QUALCOMM Incorporated or any of its subsidiaries.

Not to be used, copied, reproduced, or modified in whole or in part, nor its contents revealed in any manner to others without the express written permission of RF360 Europe GmbH.

Qualcomm is a trademark of Qualcomm Incorporated, registered in the United States and other countries. Other product and brand names may be trademarks or registered trademarks of their respective owners.

This technical data may be subject to U.S. and international export, re-export, or transfer (“export”) laws. Diversion contrary to U.S. and international law is strictly prohibited.

Table of contents

1 Application....4
2 Features....4
3 Package....5
4 Pin configuration....5
5 Matching circuit....6
6 Characteristics....7
7 Maximum ratings....8
8 Transmission coefficient....9
9 Reflection coefficients....10
10 Packing material....11
11 Marking....14
12 Soldering profile....15
13 ESD protection of SAW filters....16
14 Annotations....17
15 Cautions and warnings....18
16 Important notes....19

1 Application

- Low-loss RF filter for remote control receivers
- Impedance 50Ω at input and output
- Usable pass band width 2 MHz

2 Features

- Package size $1.4_{\pm 0.1}$ mm × $1.1_{\pm 0.1}$ mm
- Package height 0.45 mm (max.)
- Approximate weight 3 mg
- RoHS compatible
- Package for Surface Mount Technology (SMT)
- Ni/Au-plated terminals
- Filter surface passivated
- Electrostatic Sensitive Device (ESD)
- Overmold demonstrated with RF360 specific mold process
- Moisture Sensitivity Level 2a (MSL2a)
- AEC-Q200 qualified component family (Grade 1: −40 °C to +125 °C)

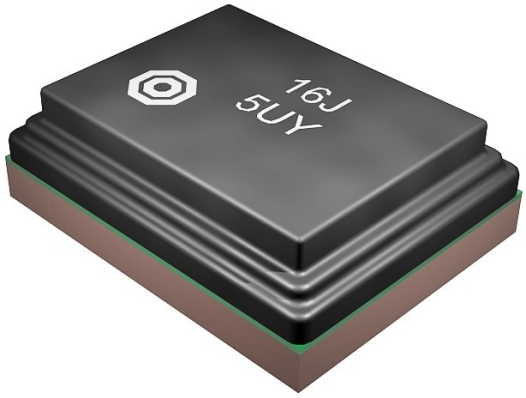

Figure 1: Picture of component with example of product marking.

3 Package

BOTTOM VIEW

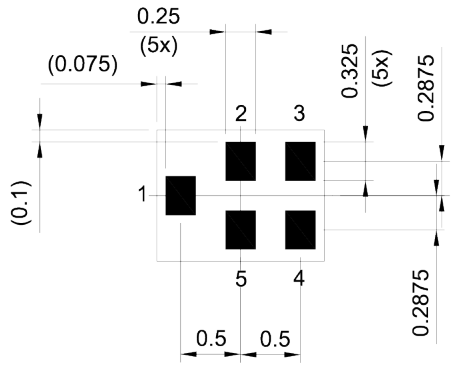

Pad and pitch tolerance ±0.05

SIDE VIEW

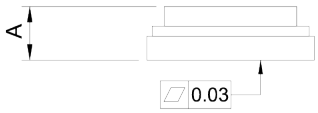

TOP VIEW

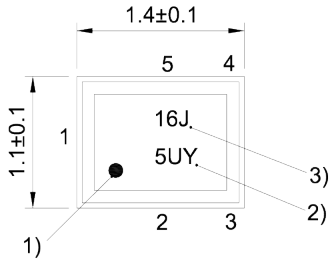

1) Marking for pad number 1
2) Example of encoded lot number
3) Example of encoded filter type number

Land pattern
THRU VIEW

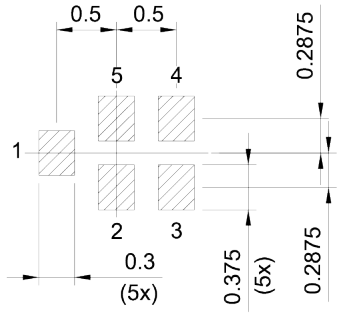

Landing pad tolerance -0.02

Figure 2: Drawing of package with package height A = 0.45 mm (max.). See Sec. Package information (p. 18).

4 Pin configuration

- 1 Input
- 4 Output
- 2, 3, 5 Ground

5 Matching circuit

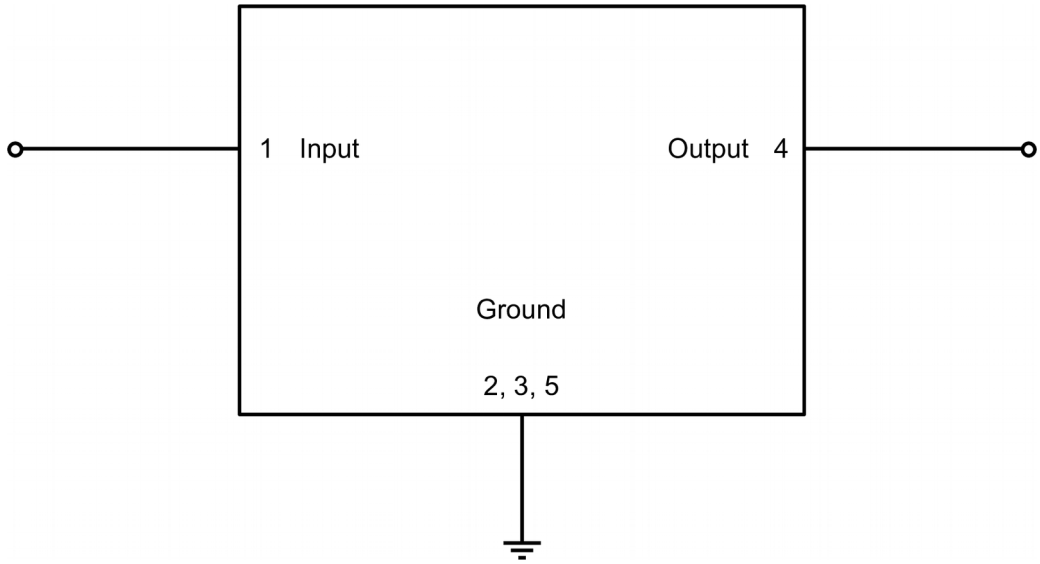

Figure 3: Schematic of matching circuit. No external matching components required.

6 Characteristics

Temperature	T_{SPEC}	= +25 °C
Input terminating impedance	Z_{IN}	= 50 Ω
Output terminating impedance	Z_{OUT}	= 50 Ω

Characteristics				min. for T_{SPEC}	typ. @ +25 °C	max. for T_{SPEC}	
Center frequency			f_C	—	869	—	MHz
Maximum insertion attenuation			α_{max}				
	868... 870	MHz		—	2.7	3.1	dB
Amplitude ripple (p-p)			$\Delta\alpha$				
	868... 870	MHz		—	0.6	0.9	dB
Maximum VSWR			$VSWR_{max}$				
@ input port	868... 870	MHz		—	1.2	1.8	
@ output port	868... 870	MHz		—	1.2	1.8	
Minimum attenuation			α_{min}				
	50... 300	MHz		65	79	—	dB
	300... 700	MHz		65	75	—	dB
	700... 835	MHz		50	62	—	dB
	835... 847	MHz		48	61	—	dB
	846... 862	MHz		30	38	—	dB
	880... 883	MHz		32	38	—	dB
	883... 915	MHz		37	46	—	dB
	915... 1000	MHz		50	63	—	dB
	1000... 3000	MHz		36	46	—	dB

7 Maximum ratings

Operable temperature	T_{OP} = −40 °C ... +125 °C	
Storage temperature	T_{STG} [1] = −40 °C ... +125 °C	
DC voltage	$\|V_{DC}\|$ [2] = 0 V (max.)	
Input power @ input port: 868 ... 870 MHz	P_{IN} = 20 dBm	Continuous wave for 50000 h @ 25 °C.

[1] Not valid for packaging material. Storage temperature for packaging material is −25 °C to +40 °C.
[2] In case of applied DC voltage blocking capacitors are mandatory.

8 Transmission coefficient

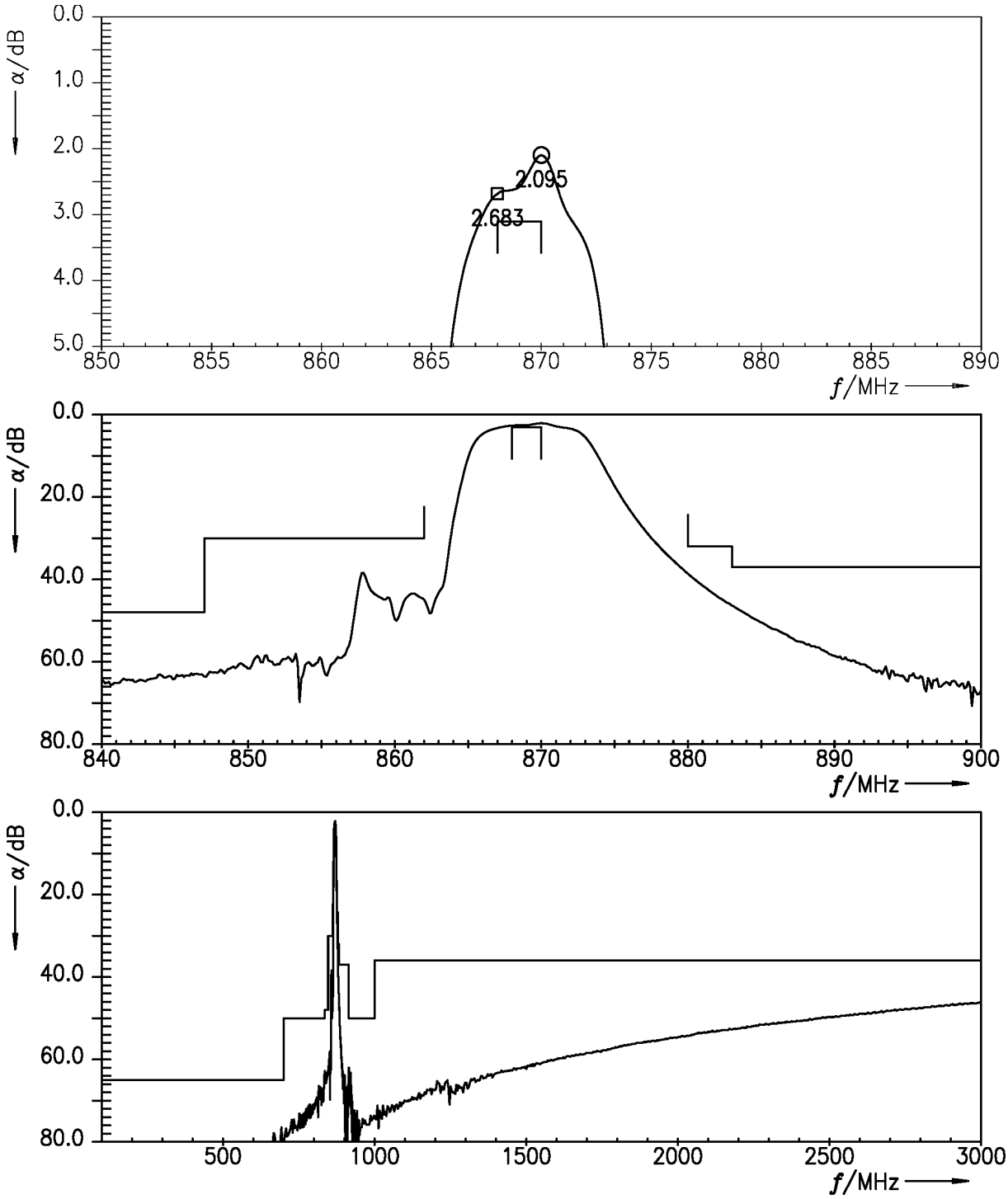

Figure 4: Attenuation.

9 Reflection coefficients

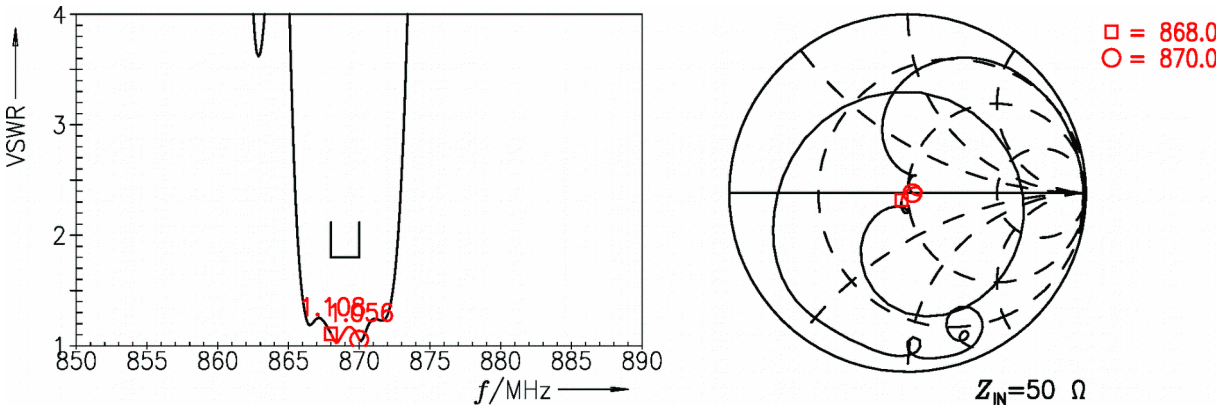

Figure 5: Reflection coefficient at input port.

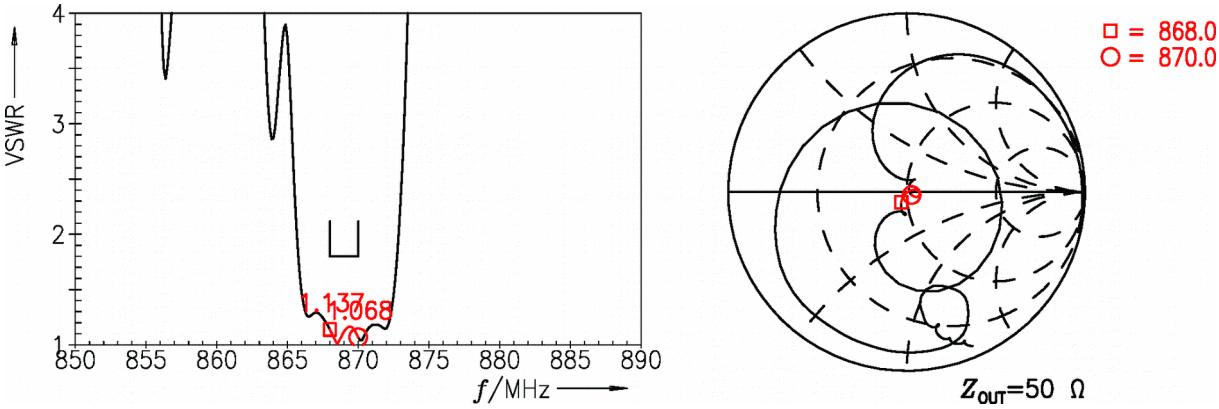

Figure 6: Reflection coefficient at output port.

10 Packing material

10.1 Tape

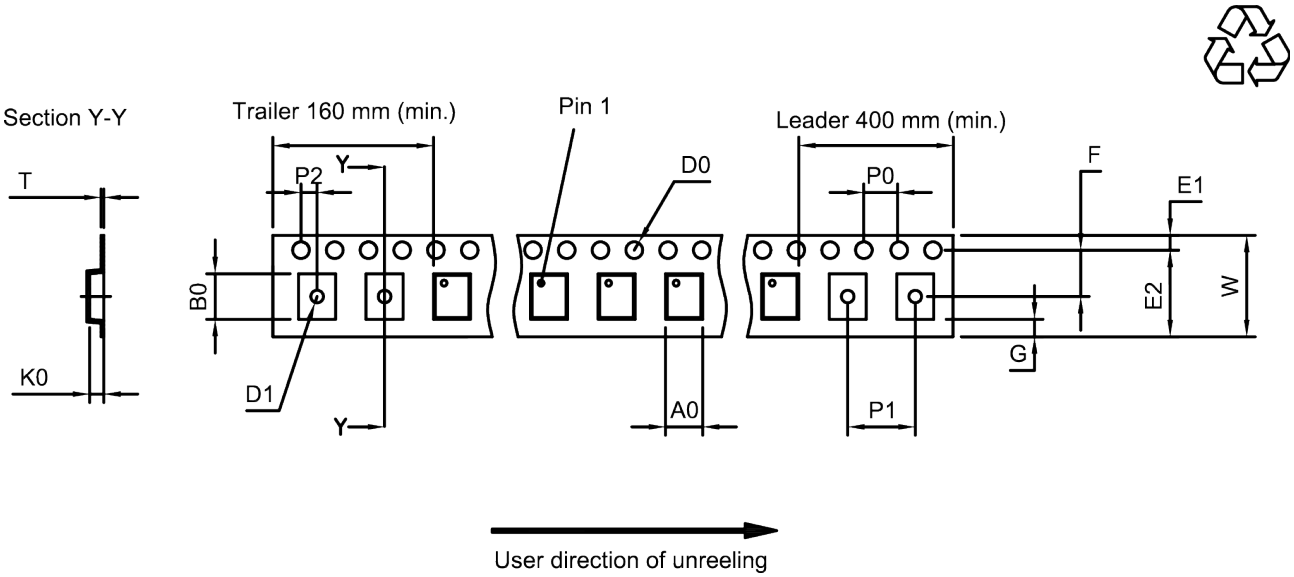

Figure 7: Drawing of tape (first-angle projection) for illustration only and not to scale. The valid tape dimensions are listed in Table 1.

A_0	1.27±0.05 mm
B_0	1.57±0.05 mm
D_0	1.5+0.1/−0 mm
D_1	0.5±0.1 mm
E_1	1.75±0.1 mm

E_2	6.25 mm (min.)
F	3.5±0.05 mm
G	0.75 mm (min.)
K_0	0.62±0.05 mm
P_0	4.0±0.1 mm

P_1	4.0±0.1 mm
P_2	2.0±0.05 mm
T	0.25±0.03 mm
W	8.0+0.3/−0.1 mm

Table 1: Tape dimensions.

10.2 Reel with diameter of 180 mm

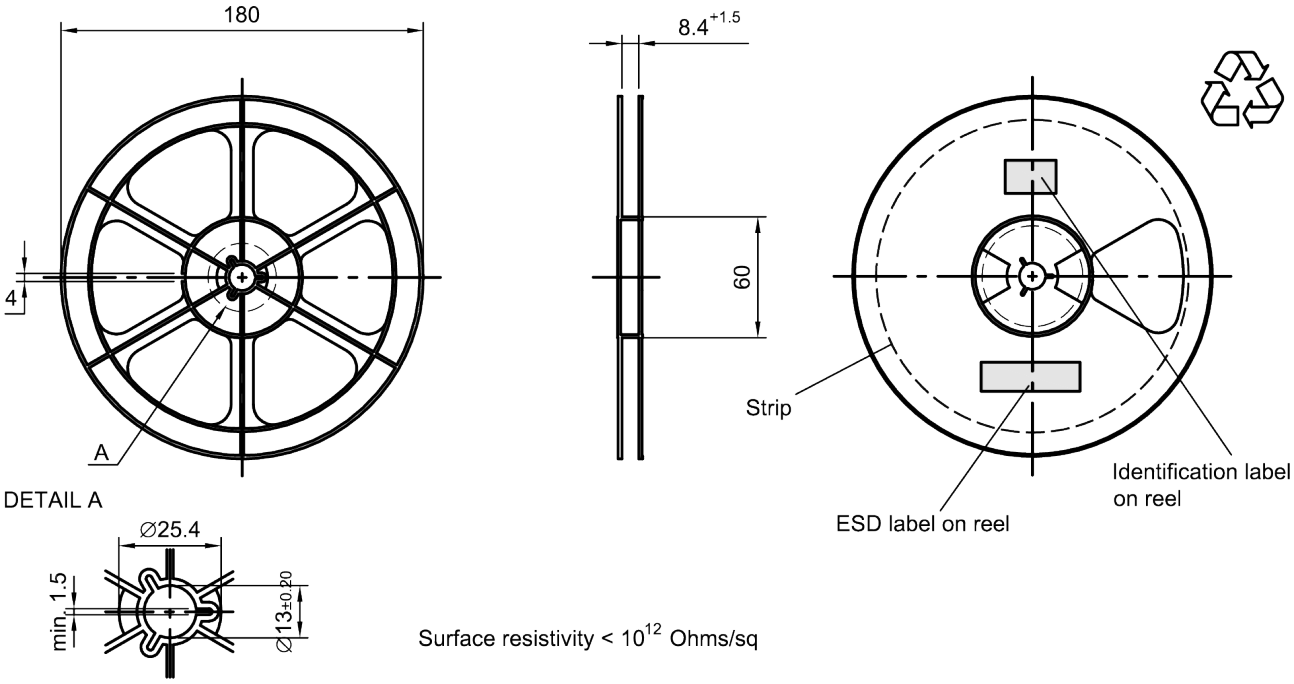

Figure 8: Drawing of reel (first-angle projection) with diameter of 180 mm.

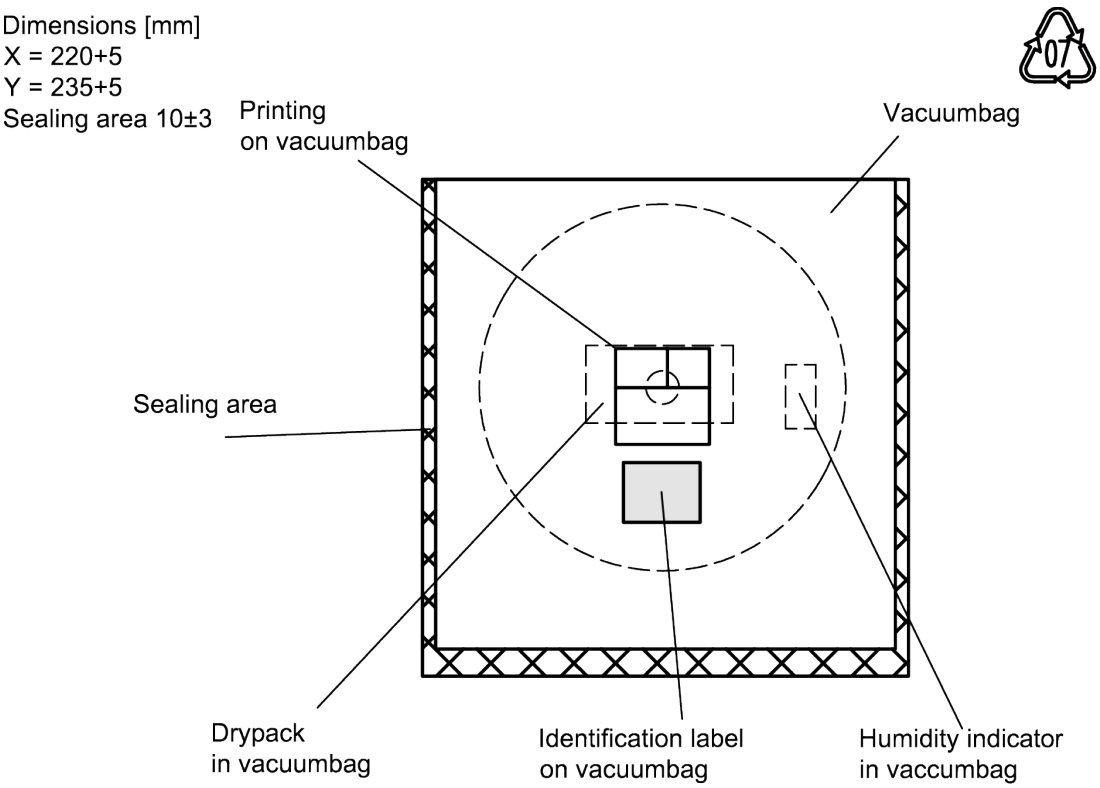

Figure 9: Drawing of moisture barrier bag (MBB) for reel with diameter of 180 mm.

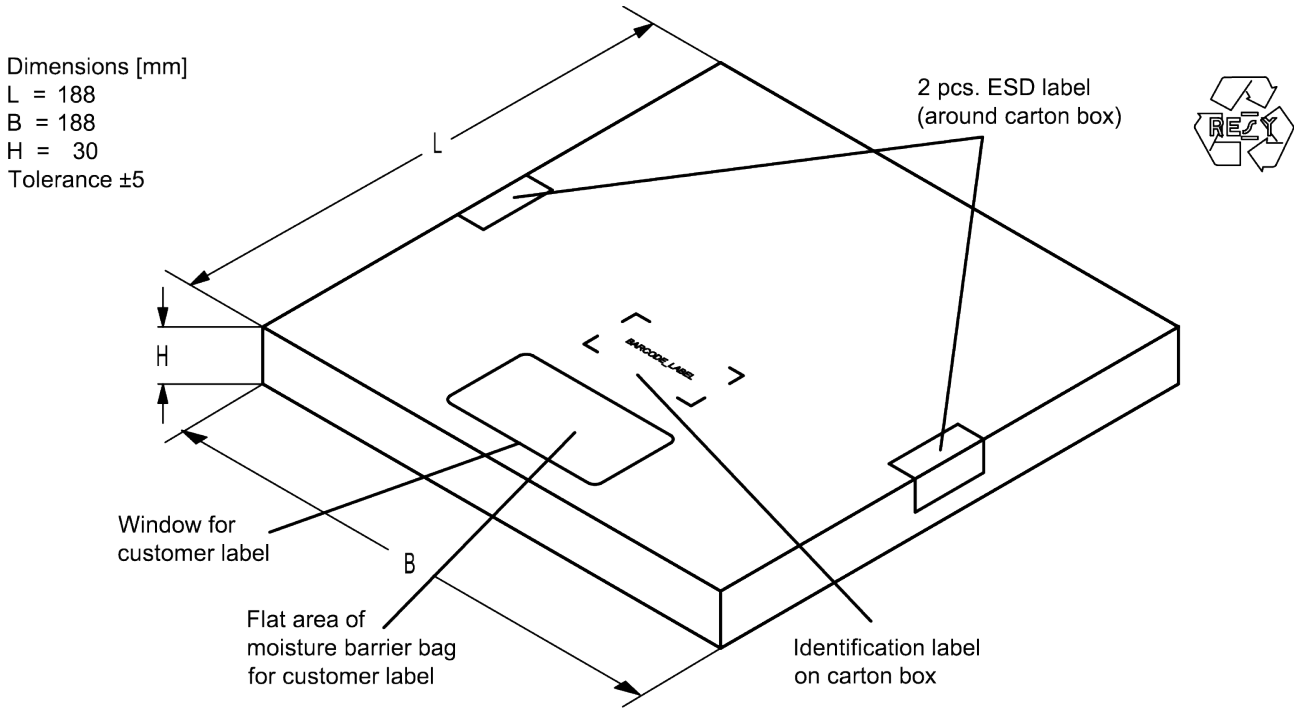

Figure 10: Drawing of folding box for reel with diameter of 180 mm.

11 Marking

Products are marked with product type number and lot number encoded according to Table 2:

- Type number:

  The 4 digit type number of the ordering code, e.g., B3xxxxB**1234**xxxx,
  is encoded by a special BASE32 code into a 3 digit marking.

  Example of decoding type number marking on device in decimal code.
  16J => **1234**
  1 x 32^2 + **6** x 32^1 + **18 (=J)** x 32^0 = **1234**
  The BASE32 code for product type B2636 is 2JC.

- Lot number:

  The last 5 digits of the lot number, e.g., **12345**,
  are encoded based on a special BASE47 code into a 3 digit marking.

  Example of decoding lot number marking on device in decimal code.
  5UY => **12345**
  5 x 47^2 + **27 (=U)** x 47^1 + **31 (=Y)** x 47^0 = **12345**

Adopted BASE32 code for type number			
Decimal value	Base32 code	Decimal value	Base32 code
0	0	16	G
1	1	17	H
2	2	18	J
3	3	19	K
4	4	20	M
5	5	21	N
6	6	22	P
7	7	23	Q
8	8	24	R
9	9	25	S
10	A	26	T
11	B	27	V
12	C	28	W
13	D	29	X
14	E	30	Y
15	F	31	Z

Adopted BASE47 code for lot number			
Decimal value	Base47 code	Decimal value	Base47 code
0	0	24	R
1	1	25	S
2	2	26	T
3	3	27	U
4	4	28	V
5	5	29	W
6	6	30	X
7	7	31	Y
8	8	32	Z
9	9	33	b
10	A	34	d
11	B	35	f
12	C	36	h
13	D	37	n
14	E	38	r
15	F	39	t
16	G	40	v
17	H	41	\
18	J	42	?
19	K	43	{
20	L	44	}
21	M	45	<
22	N	46	>
23	P		

Table 2: Lists for encoding and decoding of marking.

12 Soldering profile

The recommended soldering process is in accordance with IEC 60068-2-58 – 3rd edit and IPC/JEDEC J-STD-020B.

ramp rate	≤ 3 K/s
preheat	125 °C to 220 °C, 150 s to 210 s, 0.4 K/s to 1.0 K/s
T > 220 °C	30 s to 70 s
T > 230 °C	min. 10 s
T > 245 °C	max. 20 s
T ≥ 255 °C	–
peak temperature T_{peak}	250 °C +0/-5 °C
wetting temperature T_{min}	230 °C +5/-0 °C for 10 s ± 1 s
cooling rate	≤ 3 K/s
soldering temperature T	measured at solder pads

Table 3: Characteristics of recommended soldering profile for lead-free solder (Sn95.5Ag3.8Cu0.7).

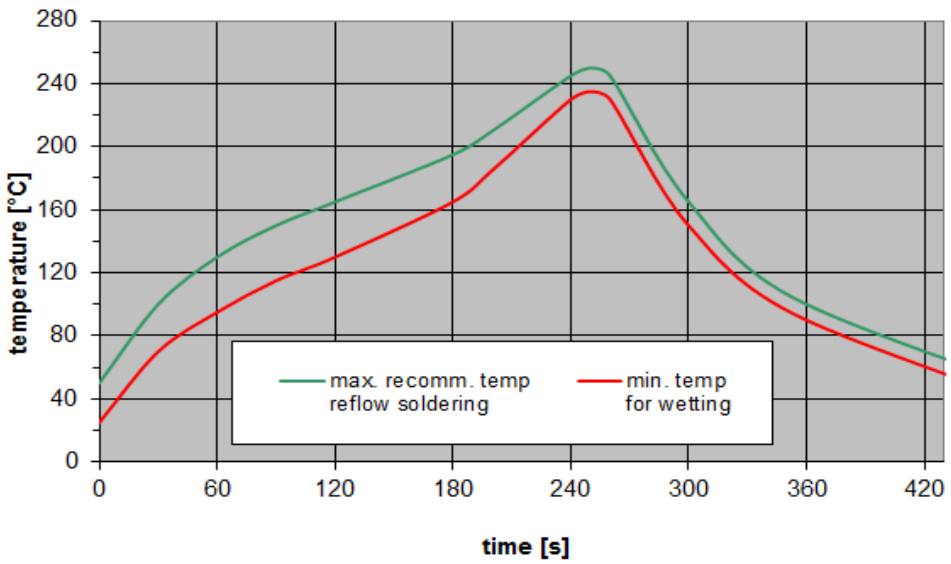

Figure 11: Recommended reflow profile for convection and infrared soldering – lead-free solder.

13 ESD protection of SAW filters

SAW filters are **E**lectro **S**tatic **D**ischarge sensitive devices. To reduce the probability of damages caused by ESD, special matching topologies have to be applied.

In general, “ESD matching” has to be ensured at that filter port, where electrostatic discharge is expected.

Electrostatic discharges predominantly appear at the antenna input of RF receivers. Therefore, only the input matching of the SAW filter has to be designed to short circuit or to block the ESD pulse.

Below three figures show recommended “ESD matching” topologies.

For wide band filters the high-pass ESD matching structure needs to be at least of 3rd order to ensure a proper matching for any impedance value of antenna and SAW filter input. The required component values have to be determined from case to case.

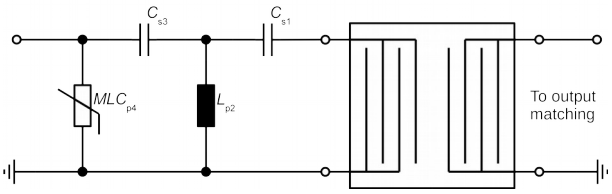

Figure 12: MLC varistor plus ESD matching.

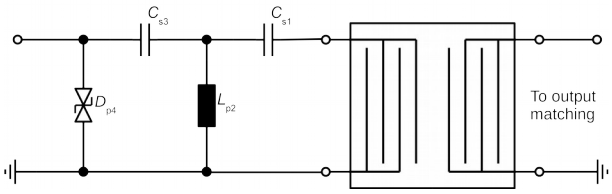

Figure 13: Suppressor diode plus ESD matching.

In cases where minor ESD occur, following simplified “ESD matching” topologies can be used alternatively.

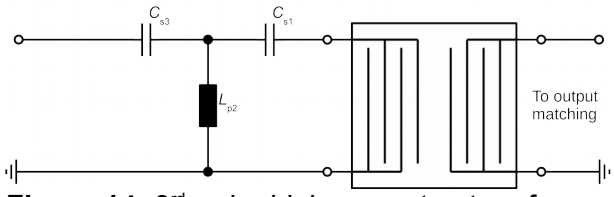

Figure 14: 3rd order high-pass structure for basic ESD protection.

In all three figures the shunt inductor L_{p2} could be replaced by a shorted microstrip with proper length and width. If this configuration is possible depends on the operating frequency and available PCB space.

Effectiveness of the applied ESD protection has to be checked according to relevant industry standards or customer specific requirements.

For further information, please refer to RF360 Application report: **“ESD protection for SAW filters”.** This report can be found under https://rffe.qualcomm.com.

14 Annotations

14.1 RoHS compatibility

ROHS-compatible means that products are compatible with the requirements according to Art. 4 (substance restrictions) of Directive 2011/65/EU of the European Parliament and of the Council of June 8th, 2011, on the restriction of the use of certain hazardous substances in electrical and electronic equipment ("Directive") with due regard to the application of exemptions as per Annex III of the Directive in certain cases.

14.2 Scattering parameters (S-parameters)

The pin/port assignment is available in the headers of the S-parameter files. Please contact your local RF360 sales office.

15 Cautions and warnings

15.1 Display of ordering codes for RF360 products

The ordering code for one and the same product can be represented differently in data sheets, data books, other publications and the website of RF360, or in order-related documents such as shipping notes, order confirmations and product labels. The varying representations of the ordering codes are due to different processes employed and do not affect the specifications of the respective products. Detailed information can be found on the Internet under https://rffe.qualcomm.com/.

15.2 Material information

Due to technical requirements components may contain dangerous substances. For information on the type in question please also contact one of our sales offices.

For information on recycling of tapes and reels please contact one of our sales offices.

15.3 Moldability

Before using in overmolding environment, please contact your local RF360 sales office.

15.4 Package information

Landing area

The printed circuit board (PCB) land pattern (landing area) shown is based on RF360 internal development and empirical data and illustrated for example purposes, only. As customers' SMD assembly processes may have a plenty of variants and influence factors which are not under control or knowledge of RF360, additional careful process development on customer side is necessary and strongly recommended in order to achieve best soldering results tailored to the particular customer needs.

Dimensions

Unless otherwise specified all dimensions are understood using unit millimeter (mm).

Dimensions do not include burrs.

Projection method

Unless otherwise specified first-angle projection is applied.

16 Important notes

The following applies to all products named in this publication:

1. Some parts of this publication contain **statements about the suitability of our products for certain areas of application**. These statements are based on our knowledge of typical requirements that are often placed on our products in the areas of application concerned. We nevertheless expressly point out **that such statements cannot be regarded as binding statements about the suitability of our products for a particular customer application.** As a rule, RF360 Europe GmbH and its affiliates are either unfamiliar with individual customer applications or less familiar with them than the customers themselves. For these reasons, it is always ultimately incumbent on the customer to check and decide whether an RF360 product with the properties described in the product specification is suitable for use in a particular customer application.
2. We also point out that **in individual cases, a malfunction of electronic components or failure before the end of their usual service life cannot be completely ruled out in the current state of the art, even if they are operated as specified.** In customer applications requiring a very high level of operational safety and especially in customer applications in which the malfunction or failure of an electronic component could endanger human life or health (e.g. in accident prevention or life-saving systems), it must therefore be ensured by means of suitable design of the customer application or other action taken by the customer (e.g. installation of protective circuitry or redundancy) that no injury or damage is sustained by third parties in the event of malfunction or failure of an electronic component.
3. **The warnings, cautions and product-specific notes must be observed.**
4. In order to satisfy certain technical requirements, **some of the products described in this publication may contain substances subject to restrictions in certain jurisdictions (e.g. because they are classed as hazardous)**. Useful information on this will be found in our Material Data Sheets on the Internet (https://rffe.qualcomm.com). Should you have any more detailed questions, please contact our sales offices.
5. We constantly strive to improve our products. Consequently, **the products described in this publication may change from time to time**. The same is true of the corresponding product specifications. Please check therefore to what extent product descriptions and specifications contained in this publication are still applicable before or when you place an order. We also **reserve the right to discontinue production and delivery of products**. Consequently, we cannot guarantee that all products named in this publication will always be available.
   The aforementioned does not apply in the case of individual agreements deviating from the foregoing for customer-specific products.