RF360
Europe GmbH

Data sheet

SAW RF filter

Short range devices

Part number:	B3725
Ordering code:	B39871B3725U410
Date:	January 05, 2022
Version:	2.6

Qualcomm products mentioned herein are products of Qualcomm Technologies, Inc. and/or its subsidiaries.

RF360 Europe GmbH
Anzinger Straße 13
81671 Munich, Germany
© 2022 Qualcomm Technologies, Inc. and/or its subsidiaries. All rights reserved

These materials, including the information contained herein, may be used only for informational purposes by the customer. Qualcomm Technologies, Inc. and/or its subsidiaries assume no responsibility for errors or omissions in these materials or the information contained herein and reserve the right to make changes to the product(s) or information contained herein without notice. The materials and information are provided on an AS IS basis, without warranty, either expressed or implied, with respect to the materials, or any output or results based on the use, application, or evaluation of such materials, including without limitation, with respect to the non-infringement of trademarks, patents, copyrights or any other intellectual property rights or other rights of third parties.

No use of this documentation or any information contained herein grants any license, whether express, implied, by estoppel or otherwise, to any intellectual property rights, including, without limitation, to any patents owned by QUALCOMM Incorporated or any of its subsidiaries.

Not to be used, copied, reproduced, or modified in whole or in part, nor its contents revealed in any manner to others without the express written permission of RF360 Europe GmbH.

Qualcomm is a trademark or registered trademark of Qualcomm Incorporated. Other product and brand names may be trademarks or registered trademarks of their respective owners.

This technical data may be subject to U.S. and international export, re-export, or transfer (“export”) laws. Diversion contrary to U.S. and international law is strictly prohibited.

Table of contents

1 Application....4
2 Features....4
3 Package....5
4 Pin configuration....5
5 Matching circuit....6
6 Characteristics....7
7 Maximum ratings....9
8 Transmission coefficient....10
9 Return loss....11
10 Packing material....12
11 Marking....15
12 Soldering profile....16
13 Annotations....17
14 Cautions and warnings....18
15 ESD protection of acoustic devices....19
16 Important notes....20

1 Application

- Low-loss RF filter for remote control receivers
- Unbalanced to unbalanced operation
- No matching network required for operation at 50 Ω
- Low amplitude ripple
- Usable pass band 2MHz

2 Features

- Package size $3.0_{\pm 0.1}$ mm × $3.0_{\pm 0.1}$ mm
- Package height $1.1_{\pm 0.125}$ mm
- Approximate weight 0.04 g
- RoHS compatible
- Package for Surface Mount Technology (SMT)
- Ni/Au-plated terminals
- Lead free soldering compatible with J-STD20C
- Electrostatic Sensitive Device (ESD)
- Moisture Sensitivity Level 1 (MSL1)

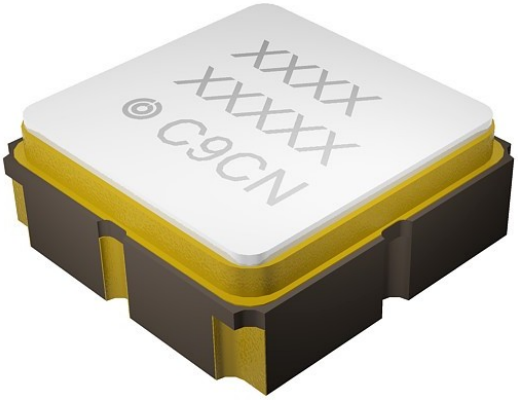

Figure 1: Picture of component with example of product marking.

3 Package

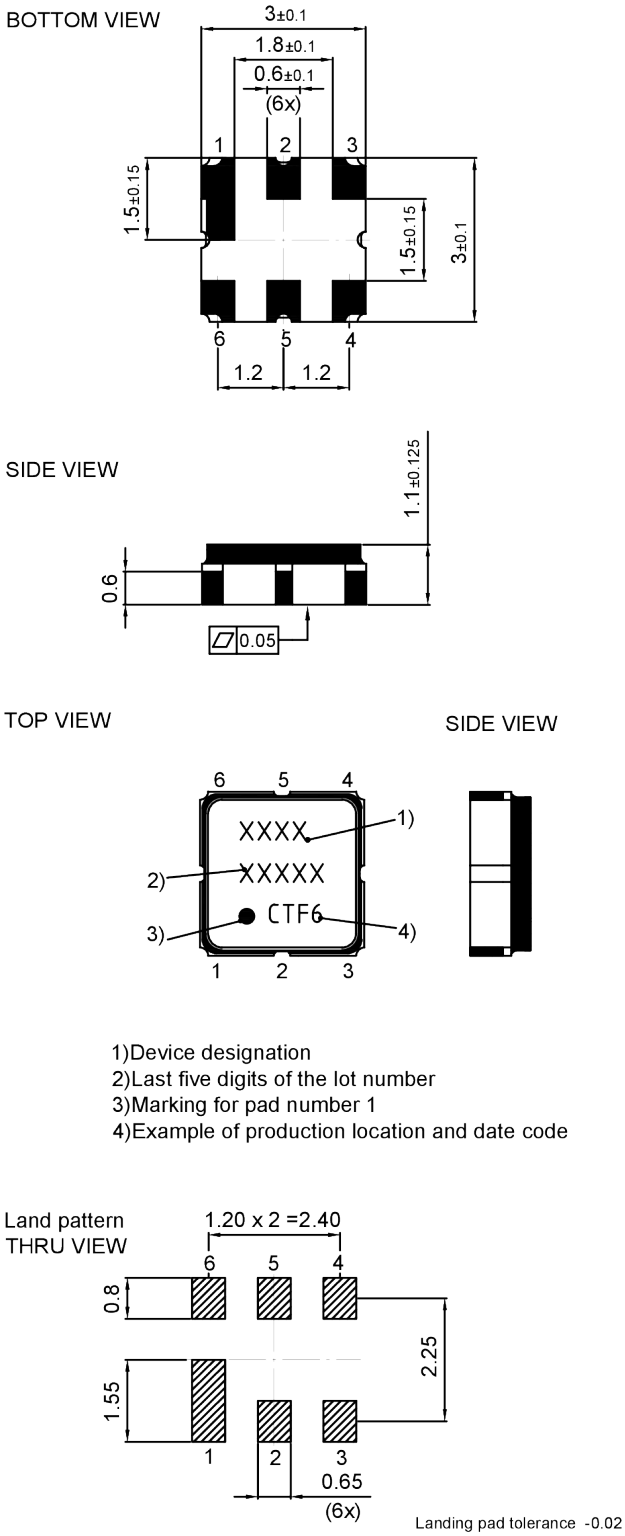

Figure 2: Drawing of package. See Sec. Package information (p. 18).

4 Pin configuration

- 2 Input
- 5 Output
- 1, 3, 4, 6 Ground

5 Matching circuit

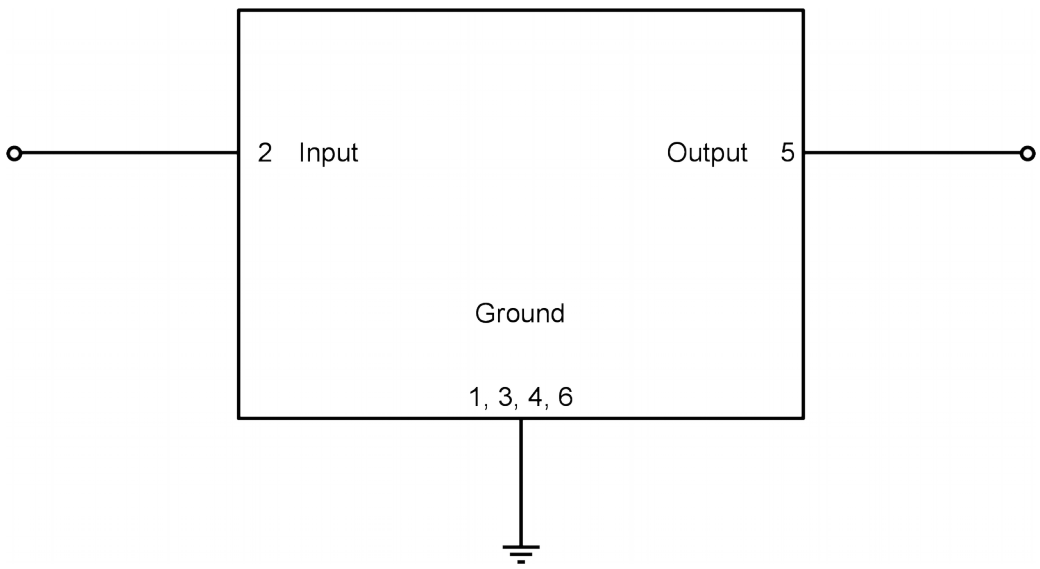

Figure 3: Schematic of matching circuit. No external matching components required.

6 Characteristics

Temperature range for specification T_{SPEC} = −20 °C ... +70 °C
Input terminating impedance Z_{IN} = 50 Ω
Output terminating impedance Z_{OUT} = 50 Ω

Characteristics				min. for T_{SPEC}	typ. @ +25 °C	max. for T_{SPEC}	
Center frequency			f_C	—	869	—	MHz
Maximum insertion attenuation			α_{max}				
	868... 870	MHz		—	2.5	3.5	dB
Amplitude ripple (p-p)			$\Delta\alpha$				
	868... 870	MHz		—	0.3	1.3	dB
Minimum return loss			α				
@ input port	868... 870	MHz		10	20	—	dB
@ output port	868... 870	MHz		10	20	—	dB
Minimum attenuation			α_{min}				
	10... 300	MHz		45	50	—	dB
	300... 845	MHz		40	45	—	dB
	845... 853	MHz		38	41	—	dB
	879... 883	MHz		20	30	—	dB
	883... 915	MHz		45	55	—	dB
	915... 945	MHz		40	45	—	dB
	945... 1200	MHz		45	55	—	dB
	1200... 2000	MHz		35	40	—	dB

Temperature range for specification	T_{SPEC}	= −40 °C ... +85 °C
Input terminating impedance	Z_{IN}	= 50 Ω
Output terminating impedance	Z_{OUT}	= 50 Ω

Characteristics				min. for T_{SPEC}	typ. @ +25 °C	max. for T_{SPEC}	
Center frequency			f_C	—	869	—	MHz
Maximum insertion attenuation			α_{max}				
	868... 870	MHz		—	2.5	4.0	dB
Amplitude ripple (p-p)			$\Delta\alpha$				
	868... 870	MHz		—	0.3	1.7	dB
Minimum return loss			α				
@ input port	868... 870	MHz		10	20	—	dB
@ output port	868... 870	MHz		10	20	—	dB
Minimum attenuation			α_{min}				
	10... 300	MHz		45	50	—	dB
	300... 845	MHz		40	45	—	dB
	845... 853	MHz		38	41	—	dB
	879... 883	MHz		15	30	—	dB
	883... 915	MHz		45	55	—	dB
	915... 945	MHz		40	45	—	dB
	945... 1200	MHz		45	55	—	dB
	1200... 2000	MHz		35	40	—	dB

7 Maximum ratings

Operable temperature	T_{OP} = −45 °C ... +125 °C	
Storage temperature	T_{STG} [1] = −45 °C ... +125 °C	
DC voltage	$\|V_{DC}\|$ = 6.0 V	
Source power	P_S	
868 ... 870 MHz	13 dBm	Source impedance 50 Ω.
868 ... 870 MHz	18 dBm	Duty cycle 1:10, -40 °C to +85 °C.

[1] Not valid for packaging material. Please refer to definition of Shelf life (p. 17).

8 Transmission coefficient

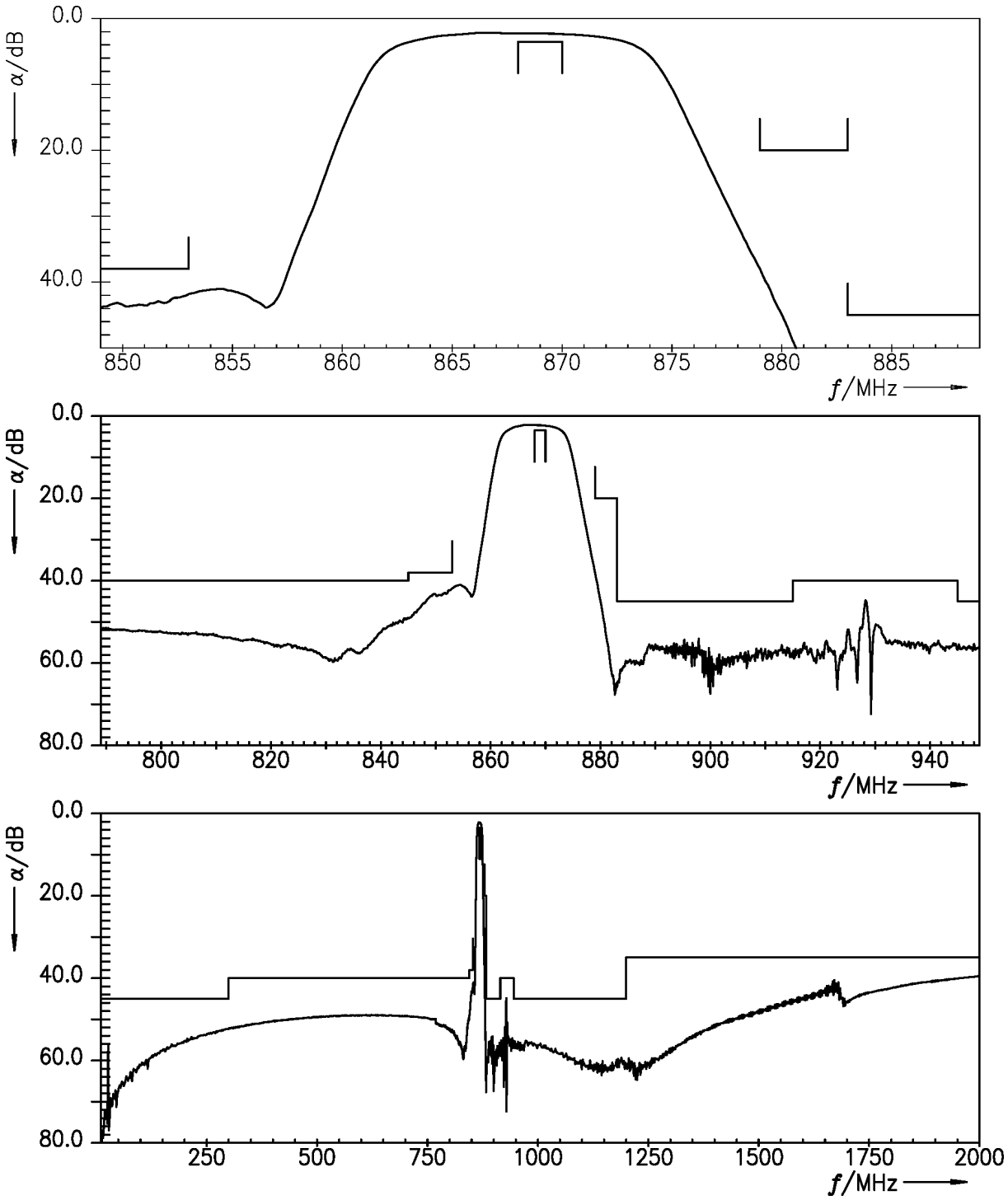

Figure 4: Attenuation.

9 Return loss

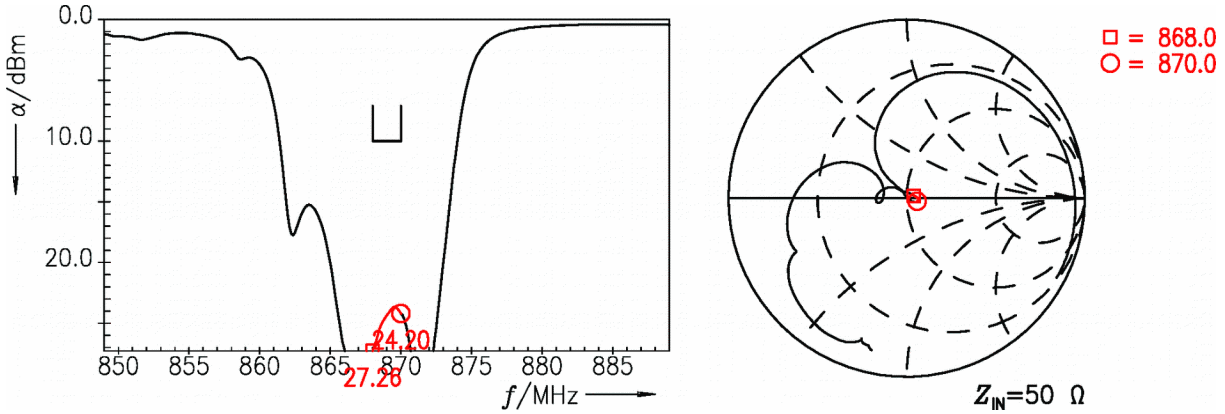

Figure 5: Return loss at input port.

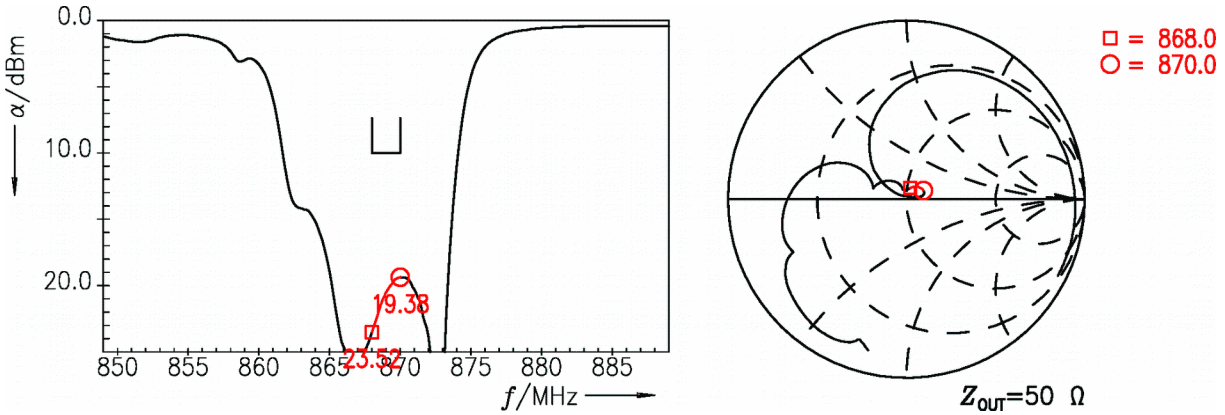

Figure 6: Return loss at output port.

10 Packing material

10.1 Tape

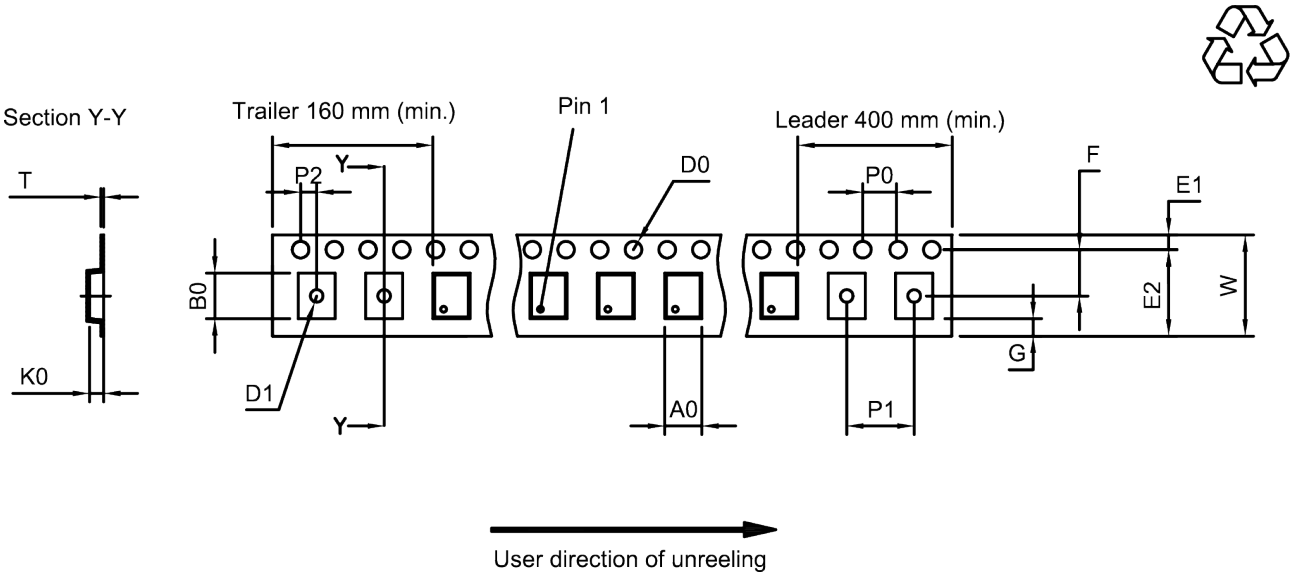

Figure 7: Drawing of tape (first-angle projection) for illustration only and not to scale. The valid tape dimensions are listed in Table 1.

A_0	$3.25_{\pm 0.1}$ mm
B_0	$3.3_{\pm 0.1}$ mm
D_0	$1.5_{+0.1/-0}$ mm
D_1	1.5 mm (min.)
E_1	$1.75_{\pm 0.1}$ mm

E_2	10.25 mm (min.)
F	$5.5_{\pm 0.05}$ mm
G	0.75 mm (min.)
K_0	$1.5_{\pm 0.1}$ mm
P_0	$4.0_{\pm 0.1}$ mm

P_1	$4.0_{\pm 0.1}$ mm
P_2	$2.0_{\pm 0.1}$ mm
T	$0.3_{\pm 0.05}$ mm
W	$12.0_{+0.3/-0.1}$ mm

Table 1: Tape dimensions.

10.2 Reel with diameter of 180 mm

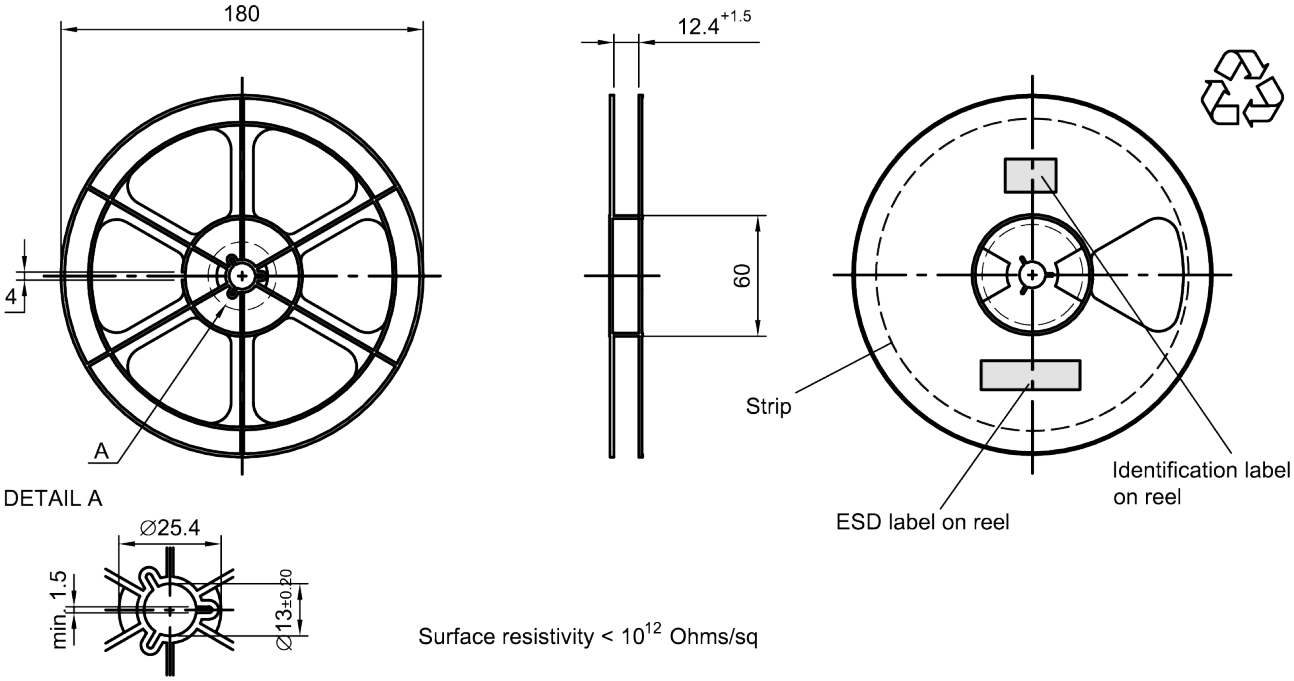

Figure 8: Drawing of reel (first-angle projection) with diameter of 180 mm.

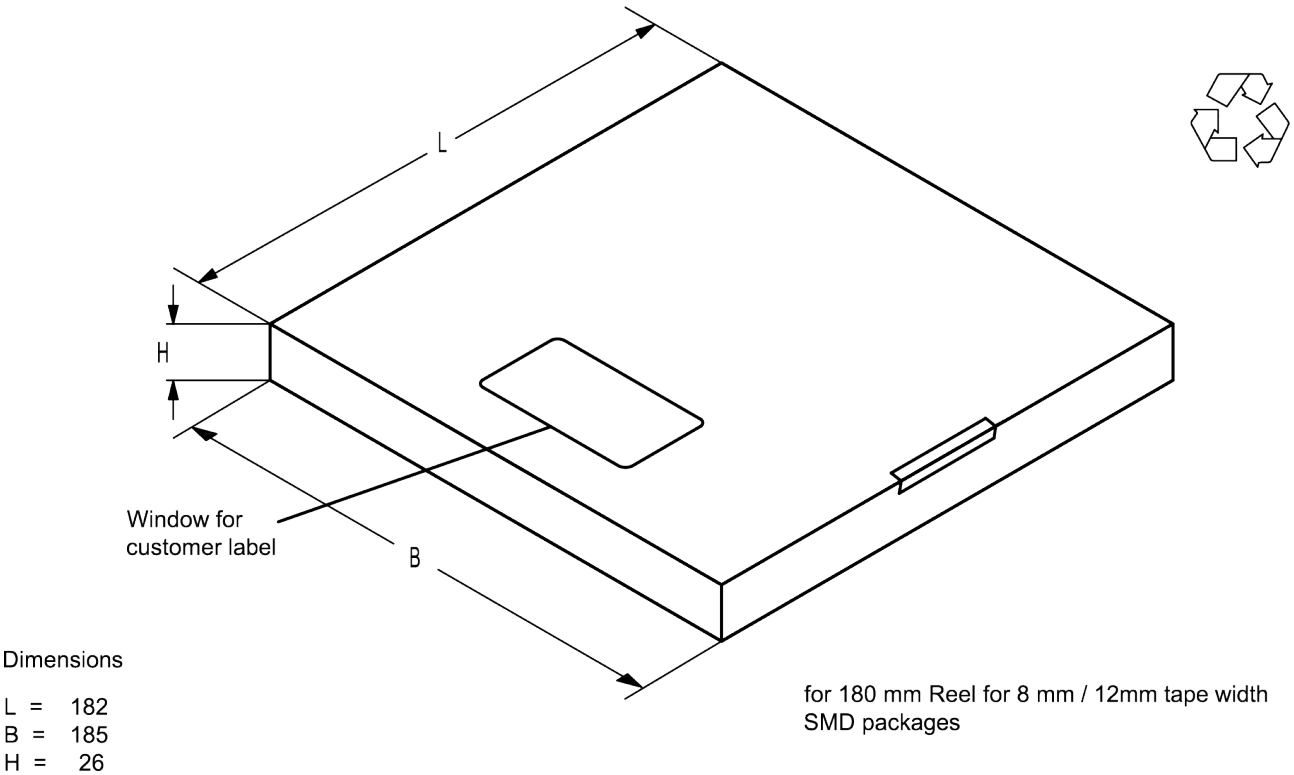

Figure 9: Drawing of folding box for reel with diameter of 180 mm.

10.3 Reel with diameter of 330 mm

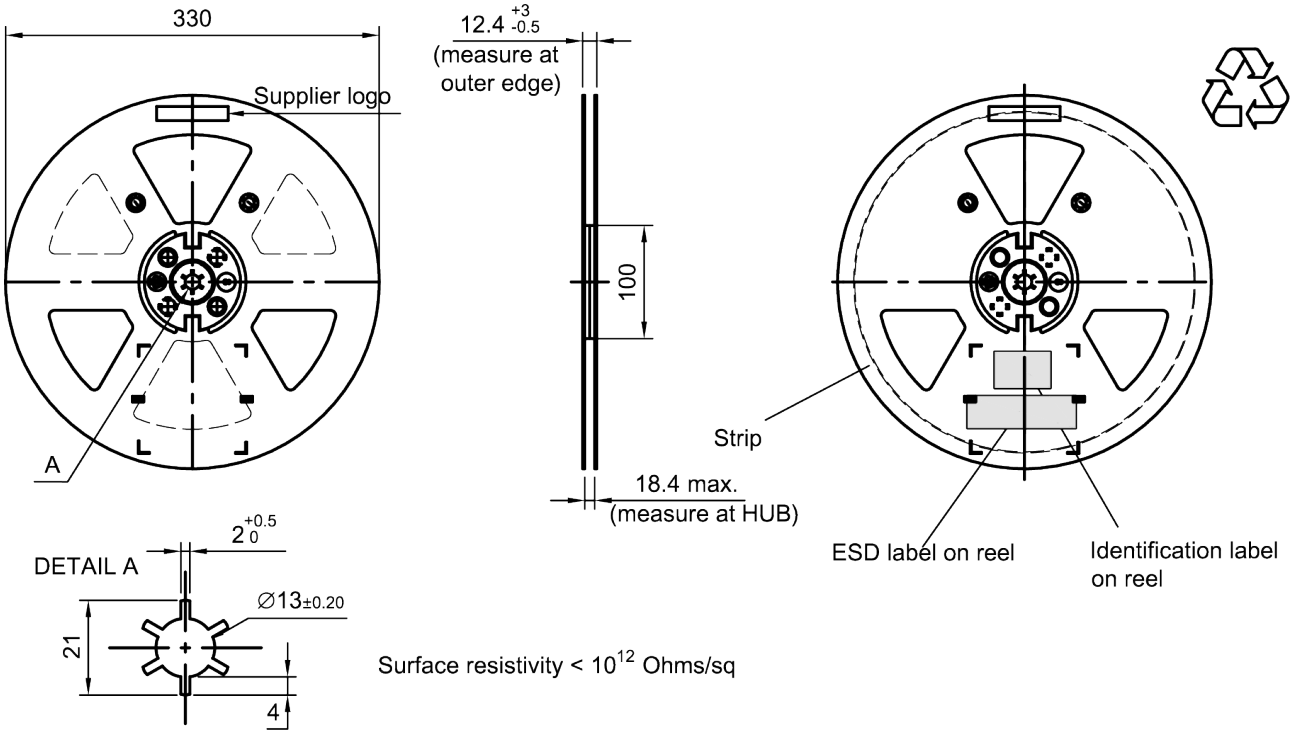

Figure 10: Drawing of reel (first-angle projection) with diameter of 330 mm.

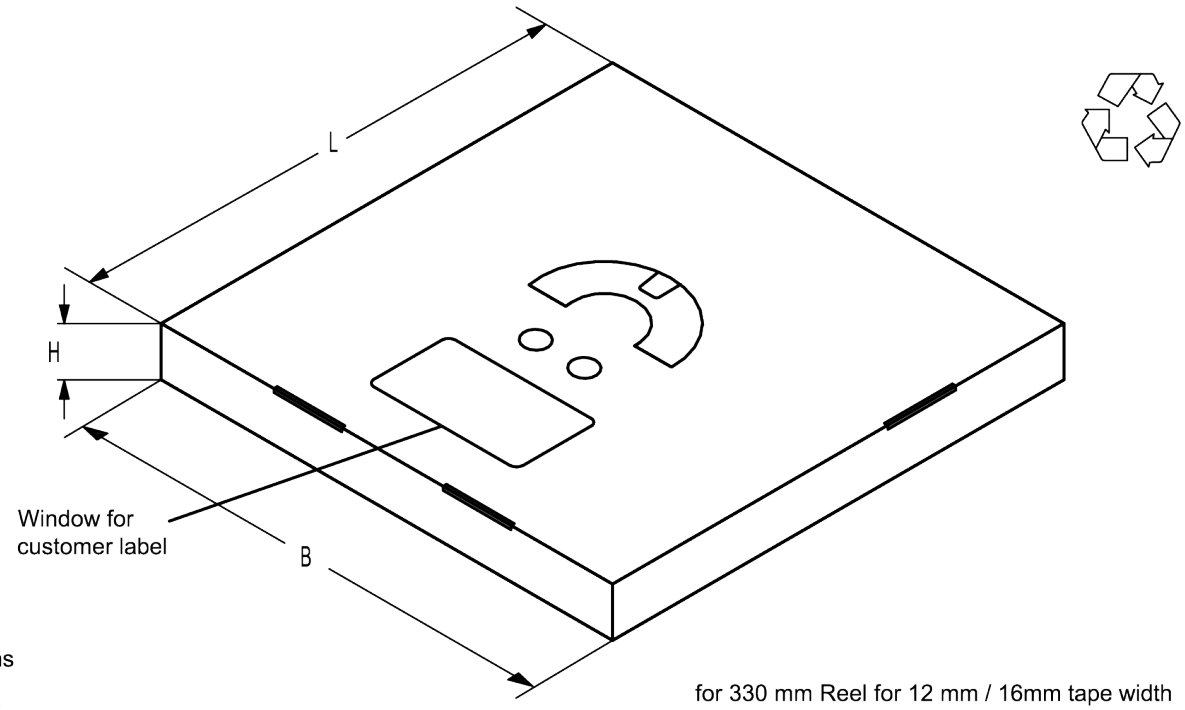

Dimensions

L = 340
B = 340
H = 25

for 330 mm Reel for 12 mm / 16mm tape width
SMD packages

Figure 11: Drawing of folding box for reel with diameter of 330 mm.

11 Marking

Products are marked with device designation, lot number, as well as production location and date code.

- Device designation: The 4-character device designation of the ordering code is used for the marking.

  Example for 4-character device designation: B3xxxxB**1234**xxxx

- Lot number: The last 5 digits of the lot number are used for the marking.

  Example: **12345**

- Production location and date code: The production location is Wuxi (encoded in the first character 'C'). The production date code is encoded in the last three characters according to Table 2.

1st digit (day)						2nd digit (year)				3rd digit (month)			
Day	Code	Day	Code	Day	Code	Year	Code	Year	Code	Month	Code	Month	Code
1	1	11	A	21	M	2010	A	2022	P	Jan	1	Jul	7
2	2	12	B	22	N	2011	B	2023	R	Feb	2	Aug	8
3	3	13	C	23	P	2012	C	2024	S	Mar	3	Sep	9
4	4	14	D	24	R	2013	D	2025	T	Apr	4	Oct	0
5	5	15	E	25	S	2014	E	2026	U	May	5	Nov	N
6	6	16	F	26	T	2015	F	2027	V	Jun	6	Dec	D
7	7	17	H	27	U	2016	H	2028	W				
8	8	18	J	28	V	2017	J	2029	X				
9	9	19	K	29	W	2018	K	2030	Z				
10	0	20	L	30	X	2019	L	2031	A				
				31	Z	2020	M	2032	B				
						2021	N	and so on					

Table 2: Production date code.

Example of how to decode production location and date code:

Code: **C T F 6**

Location: C → Wuxi
Day: T → 26th
Year: F → 2015
Month: 6 → June

12 Soldering profile

The recommended soldering process is in accordance with IEC 60068-2-58 – 3rd edit and IPC/JEDEC J-STD-020B.

ramp rate	≤ 3 K/s
preheat	125 °C to 220 °C, 150 s to 210 s, 0.4 K/s to 1.0 K/s
T > 220 °C	30 s to 70 s
T > 230 °C	min. 10 s
T > 245 °C	max. 20 s
T ≥ 255 °C	–
peak temperature T_{peak}	250 °C +0/-5 °C
wetting temperature T_{min}	230 °C +5/-0 °C for 10 s ± 1 s
cooling rate	≤ 3 K/s
soldering temperature T	measured at solder pads

Table 3: Characteristics of recommended soldering profile for lead-free solder (Sn95.5Ag3.8Cu0.7).

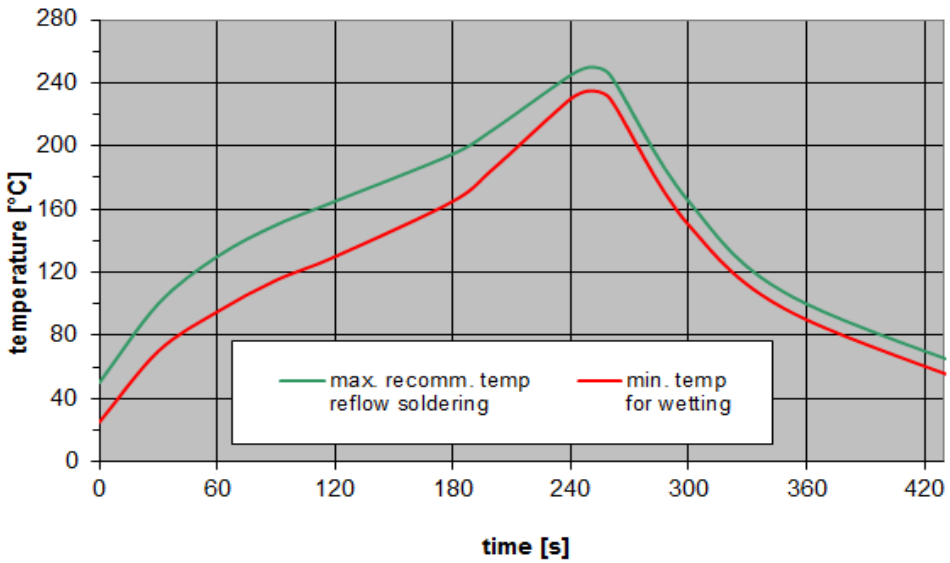

Figure 12: Recommended reflow profile for convection and infrared soldering – lead-free solder.

13 Annotations

13.1 RoHS compatibility

ROHS-compatible means that products are compatible with the requirements according to Art. 4 (substance restrictions) of Directive 2011/65/EU of the European Parliament and of the Council of June 8th, 2011, on the restriction of the use of certain hazardous substances in electrical and electronic equipment ("Directive") with due regard to the application of exemptions as per Annex III of the Directive in certain cases.

13.2 Scattering parameters (S-parameters)

The pin/port assignment is available in the headers of the S-parameter files. Please contact your local RF360 sales office.

13.3 Shelf life

The shelf life of components is determined by solderability of the package terminals. It is specified as 2 years from manufacturing date assuming the following conditions:

- storage in original packaging and non-aggressive atmosphere,
- storage temperature ranging from −25 °C to +40 °C, and
- storage humidity with ≤ 75 % r.h. mean annual humidity, ≤ 95 % r.h. for max. 30 days / year, and no dew condensation.

14 Cautions and warnings

14.1 Display of ordering codes for RF360 products

The ordering code for one and the same product can be represented differently in data sheets, data books, other publications and the website of RF360, or in order-related documents such as shipping notes, order confirmations and product labels. The varying representations of the ordering codes are due to different processes employed and do not affect the specifications of the respective products. Detailed information can be found on the Internet under https://rffe.qualcomm.com/.

14.2 Material information

Due to technical requirements components may contain dangerous substances. For information on the type in question please also contact one of our sales offices.

For information on recycling of tapes and reels please contact one of our sales offices.

14.3 Moldability

Before using in overmolding environment, please contact your local RF360 sales office.

14.4 Package information

Landing area

The printed circuit board (PCB) land pattern (landing area) shown is based on RF360 internal development and empirical data and illustrated for example purposes, only. As customers' SMD assembly processes may have a plenty of variants and influence factors which are not under control or knowledge of RF360, additional careful process development on customer side is necessary and strongly recommended in order to achieve best soldering results tailored to the particular customer needs.

Dimensions

Unless otherwise specified all dimensions are understood using unit millimeter (mm).

Projection method

Unless otherwise specified first-angle projection is applied.

15 ESD protection of acoustic devices

Acoustic devices are **E**lectro **S**tatic **D**ischarge sensitive devices. To reduce the probability of damages caused by ESD, special matching topologies must be applied.

In general, “ESD matching” must be ensured at that electrical port, where electrostatic discharge is expected.

Electrostatic discharges predominantly appear at the antenna input of RF receivers. Therefore, only the input matching of the acoustic device must be designed to short circuit or to block the ESD pulse.

Below three figures show recommended “ESD matching” topologies.

For wide band acoustic devices the high-pass ESD matching structure needs to be at least of 3rd order to ensure a proper matching for any impedance value of antenna and input port. The required component values must be determined from case to case.

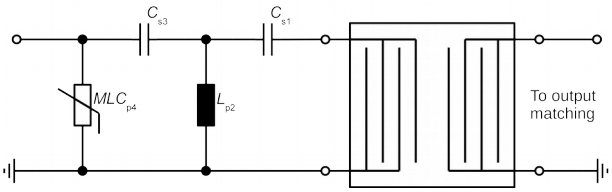

Figure 13: MLC varistor plus ESD matching.

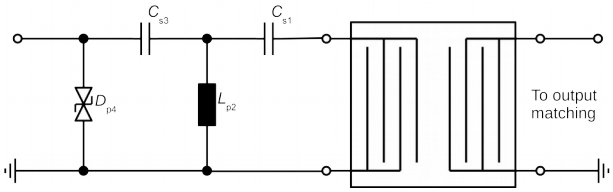

Figure 14: Suppressor diode plus ESD matching.

In cases where minor ESD occur, following simplified “ESD matching” topologies can be used alternatively.

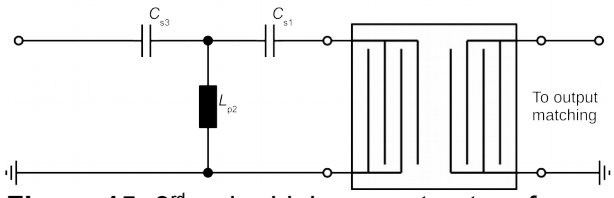

Figure 15: 3rd order high-pass structure for basic ESD protection.

In all three figures the shunt inductor L_{p2} could be replaced by a shorted microstrip with proper length and width. If this configuration is possible depends on the operating frequency and available PCB space.

Effectiveness of the applied ESD protection has to be checked according to relevant industry standards or customer specific requirements.

For further information, please refer to RF360 Application report: **“ESD protection for SAW filters”.** This report can be found under https://rffe.qualcomm.com.

16 Important notes

The following applies to all products named in this publication:

1. Some parts of this publication contain **statements about the suitability of our products for certain areas of application**. These statements are based on our knowledge of typical requirements that are often placed on our products in the areas of application concerned. We nevertheless expressly point out **that such statements cannot be regarded as binding statements about the suitability of our products for a particular customer application.** As a rule, RF360 Europe GmbH and its affiliates are either unfamiliar with individual customer applications or less familiar with them than the customers themselves. For these reasons, it is always ultimately incumbent on the customer to check and decide whether an RF360 product with the properties described in the product specification is suitable for use in a particular customer application.
2. We also point out that **in individual cases, a malfunction of electronic components or failure before the end of their usual service life cannot be completely ruled out in the current state of the art, even if they are operated as specified.** In customer applications requiring a very high level of operational safety and especially in customer applications in which the malfunction or failure of an electronic component could endanger human life or health (e.g. in accident prevention or life-saving systems), it must therefore be ensured by means of suitable design of the customer application or other action taken by the customer (e.g. installation of protective circuitry or redundancy) that no injury or damage is sustained by third parties in the event of malfunction or failure of an electronic component.
3. **The warnings, cautions and product-specific notes must be observed.**
4. In order to satisfy certain technical requirements, **some of the products described in this publication may contain substances subject to restrictions in certain jurisdictions (e.g. because they are classed as hazardous)**. Useful information on this will be found in our Material Data Sheets on the Internet (https://rffe.qualcomm.com). Should you have any more detailed questions, please contact our sales offices.
5. We constantly strive to improve our products. Consequently, **the products described in this publication may change from time to time**. The same is true of the corresponding product specifications. Please check therefore to what extent product descriptions and specifications contained in this publication are still applicable before or when you place an order. We also **reserve the right to discontinue production and delivery of products**. Consequently, we cannot guarantee that all products named in this publication will always be available.
   The aforementioned does not apply in the case of individual agreements deviating from the foregoing for customer-specific products.