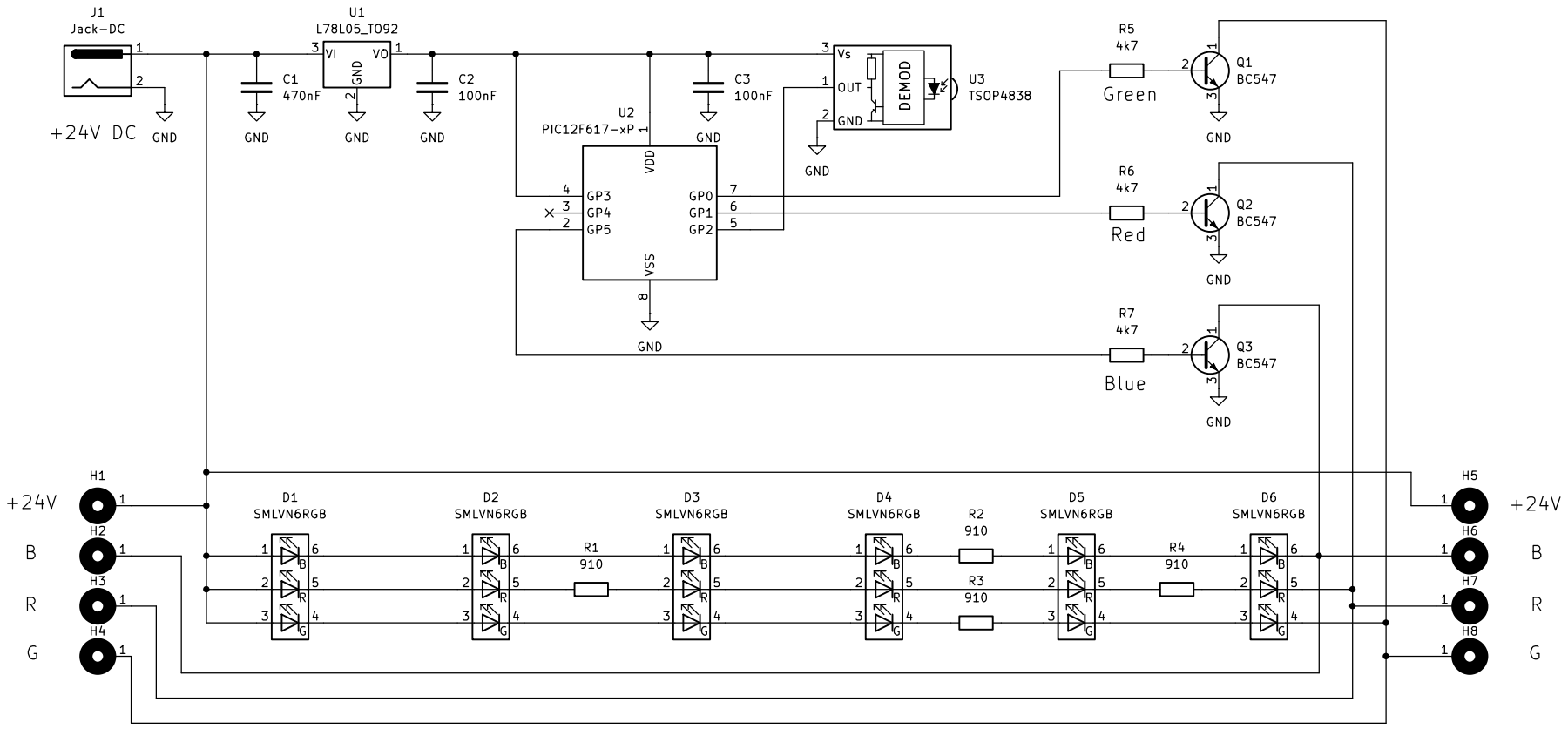

Not sure if this is the LED. Only used because of match of package.

Sheet: /		
File: Lidl_LED_Strip.kicad_sch		
Title: LIDL RGB LED Strip, one Segement		
Size: A4	Date: 2024-11-30	**Rev: 1.0**
KiCad E.D.A. 8.0.2		Id: 1/1