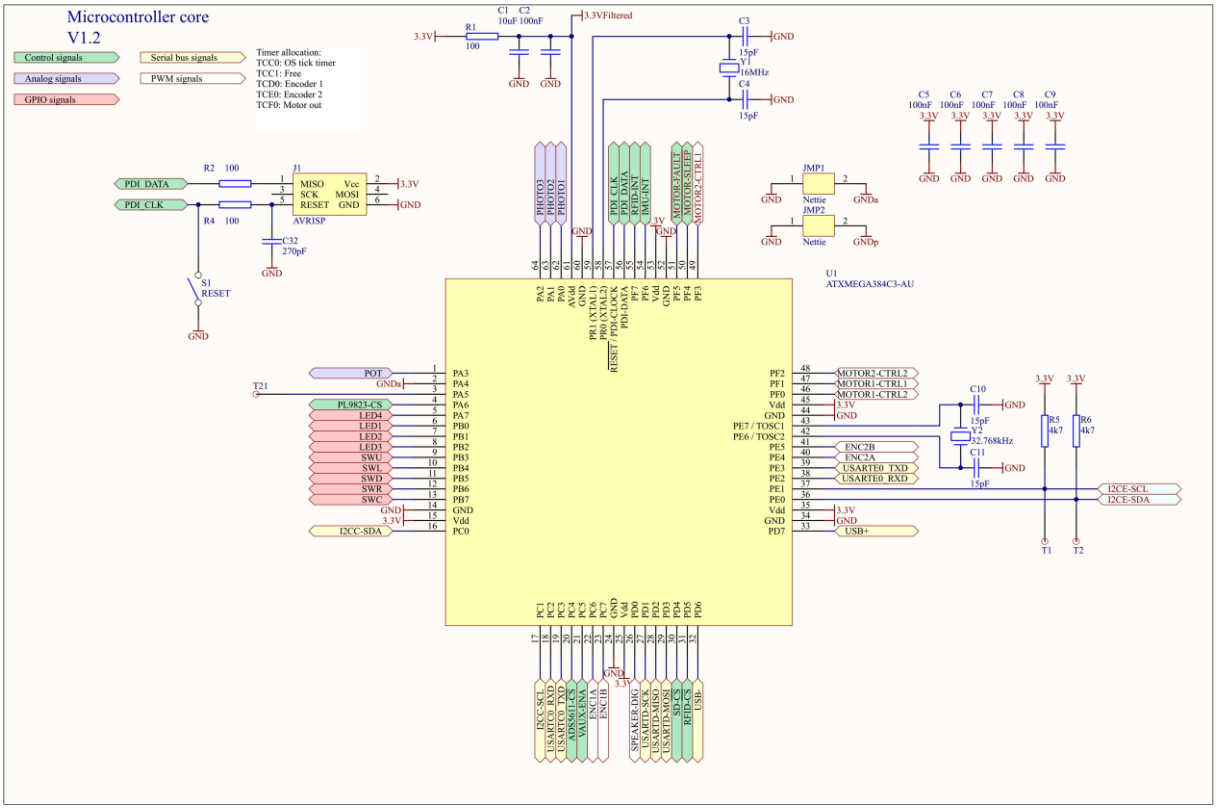
Microcontroller core
V1.2
Control signals
Serial bus signals
Analog signals
PWM signals
GPIO signals
Timer allocation:
TCC0: OS tick timer
TCC1: Free
TCD0: Encoder 1
TCE0: Encoder 2
TCF0: Motor out
U1
ATXMEGA384C3-AU
AVRISP
PDI_DATA
PDI_CLK
S1
RESET
POT
PL9823-CS
LED4
LED1
LED2
LED3
SWU
SWL
SWD
SWR
SWC
I2CC-SDA
I2CC-SCL
USARTC0_RXD
USARTC0_TXD
PWM4-EN
MAX-ENA
ENC1A
ENC1B
SPEAKER-DIG
USARTD-SCK
USARTD-MISO
USARTD-MOSI
SD-CS
RFID-CS
USB-
USB+
MOTOR2-CTRL2
MOTOR1-CTRL1
MOTOR1-CTRL2
ENC2B
ENC2A
USARTE0_TXD
USARTE0_RXD
I2CE-SCL
I2CE-SDA
PHOTO3
PHOTO2
PHOTO1
PDI_CLK
PDI_DATA
RFID-INT
IMU-INT
MOTOR-FAULT
MOTOR-SLEEP
MOTOR2-CTRL1
3.3VFiltered

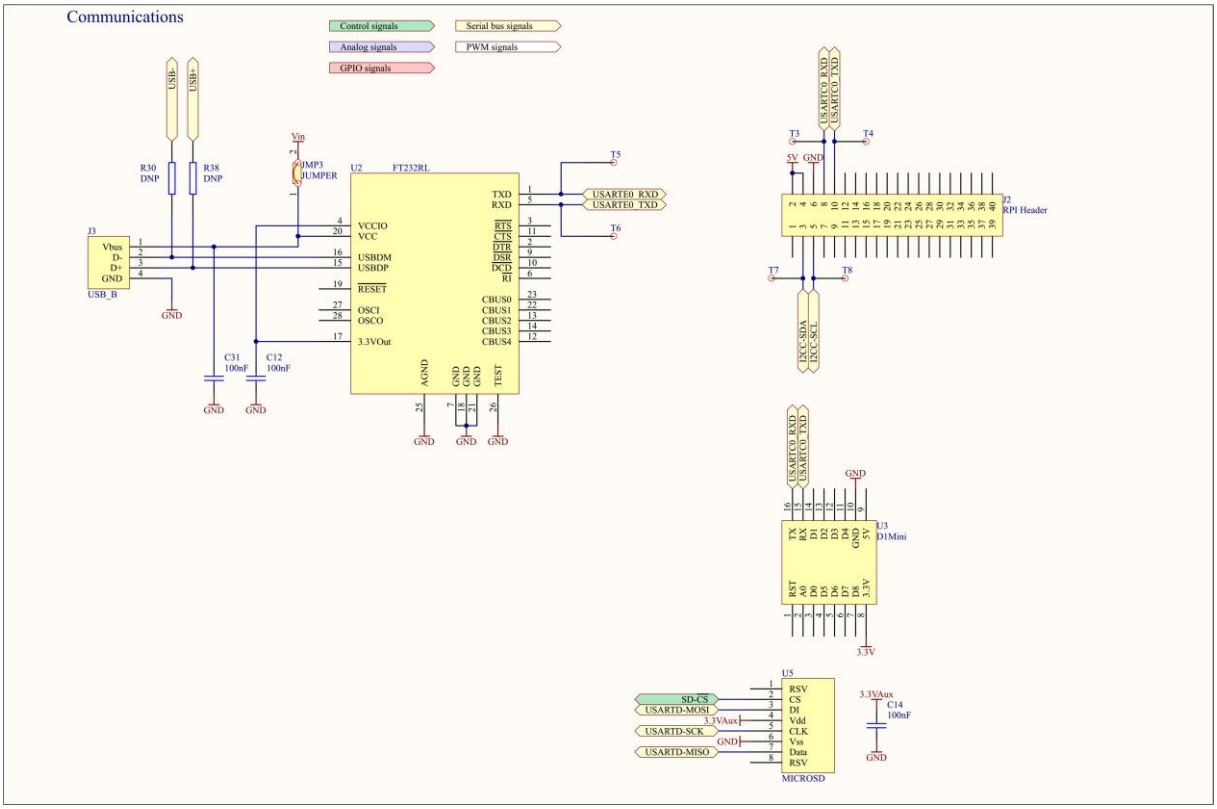
Communications
Control signals
Serial bus signals
Analog signals
PWM signals
GPIO signals
USB-
USB+
J3
USB_B
U2
FT232RL
USARTE0_RXD
USARTE0_TXD
J2
RPI Header
I2CC-SDA
I2CC-SCL
USARTC0_RXD
USARTC0_TXD
U3
D1Mini
U5
MICROSD
SD-CS
USARTD-MOSI
USARTD-SCK
USARTD-MISO

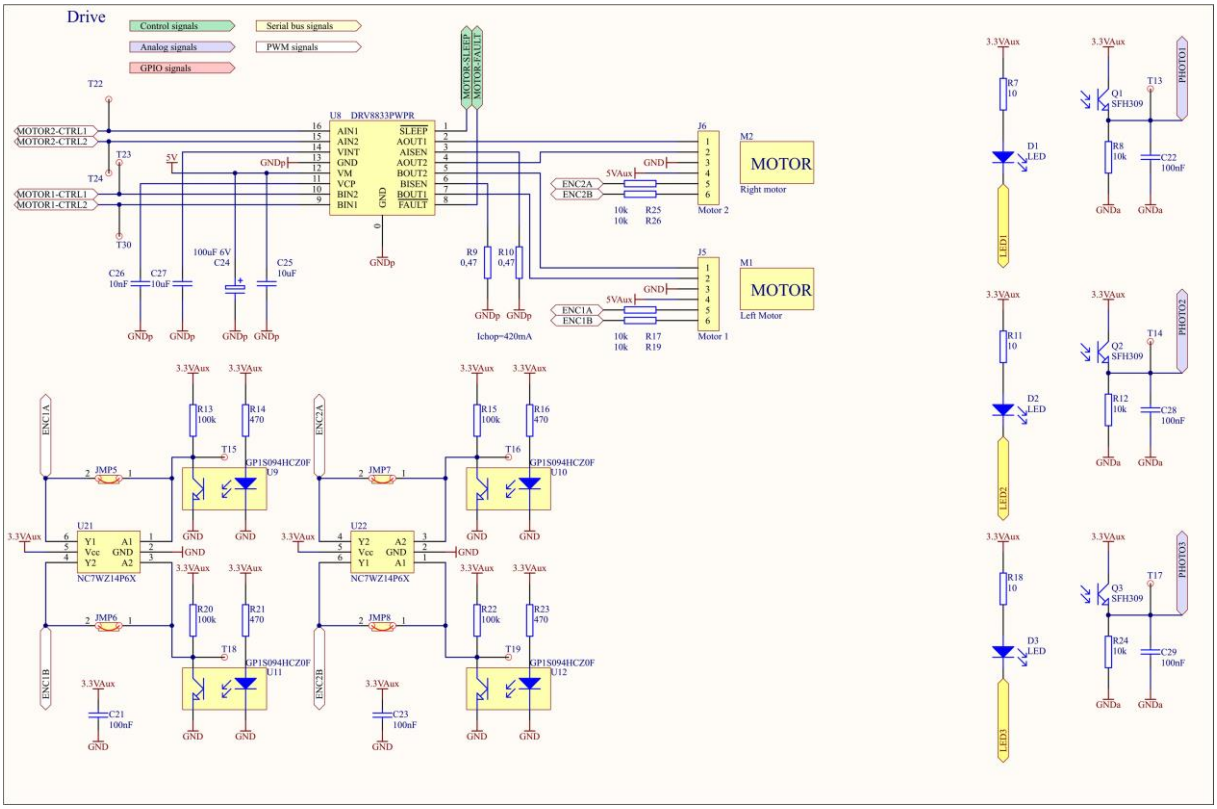
Drive
Control signals
Serial bus signals
Analog signals
PWM signals
GPIO signals
U8 DRV8833PWPR
MOTOR-SLEEP
MOTOR-FAULT
MOTOR2-CTRL1
MOTOR2-CTRL2
MOTOR1-CTRL1
MOTOR1-CTRL2
AIN1
AIN2
VINT
GND
VM
VCP
BIN2
BIN1
SLEEP
AOUT1
AISEN
AOUT2
BOUT2
BISEN
BOUT1
FAULT
J6
M2
MOTOR
Right motor
Motor 2
ENC2A
ENC2B
J5
M1
MOTOR
Left Motor
Motor 1
ENC1A
ENC1B
Ichop=420mA
U21
U22
NC7WZ14P6X
GP1S094HCZ0F
JMP5
JMP6
JMP7
JMP8
PHOTO1
PHOTO2
PHOTO3
LED1
LED2
LED3

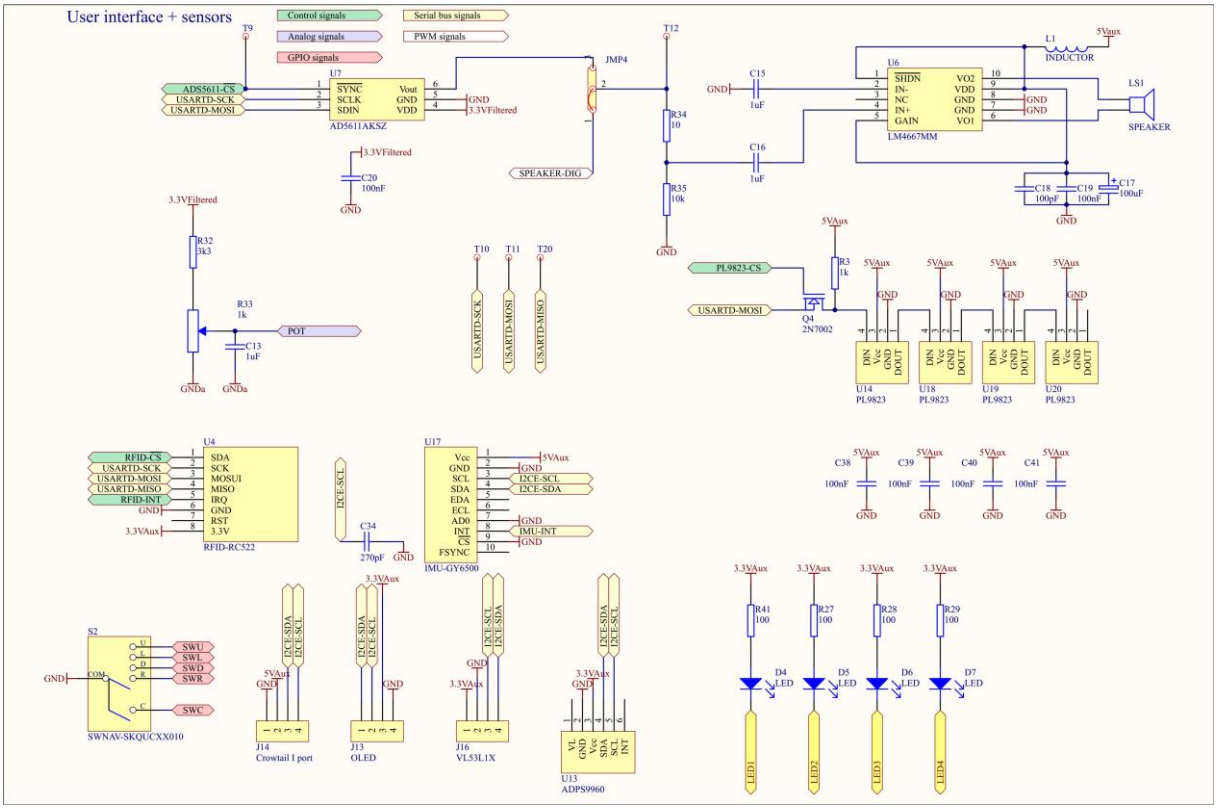
User interface + sensors
Control signals
Serial bus signals
Analog signals
PWM signals
GPIO signals
ADS5611-CS
USARTD-SCK
USARTD-MOSI
U7
AD5611AKSZ
JMP4
SPEAKER-DIG
U6
LM4667MM
L1
INDUCTOR
LS1
SPEAKER
PL9823-CS
USARTD-MOSI
Q4
2N7002
U14
U18
U19
U20
PL9823
POT
USARTD-SCK
USARTD-MOSI
USARTD-MISO
U4
RFID-RC522
RFID-CS
RFID-INT
U17
IMU-GY6500
I2CE-SCL
I2CE-SDA
IMU-INT
S2
SWNAV-SKQUCXX010
SWU
SWL
SWD
SWR
SWC
J14
Crowtail I port
J13
OLED
J16
VL53L1X
U13
ADPS9960
LED1
LED2
LED3
LED4

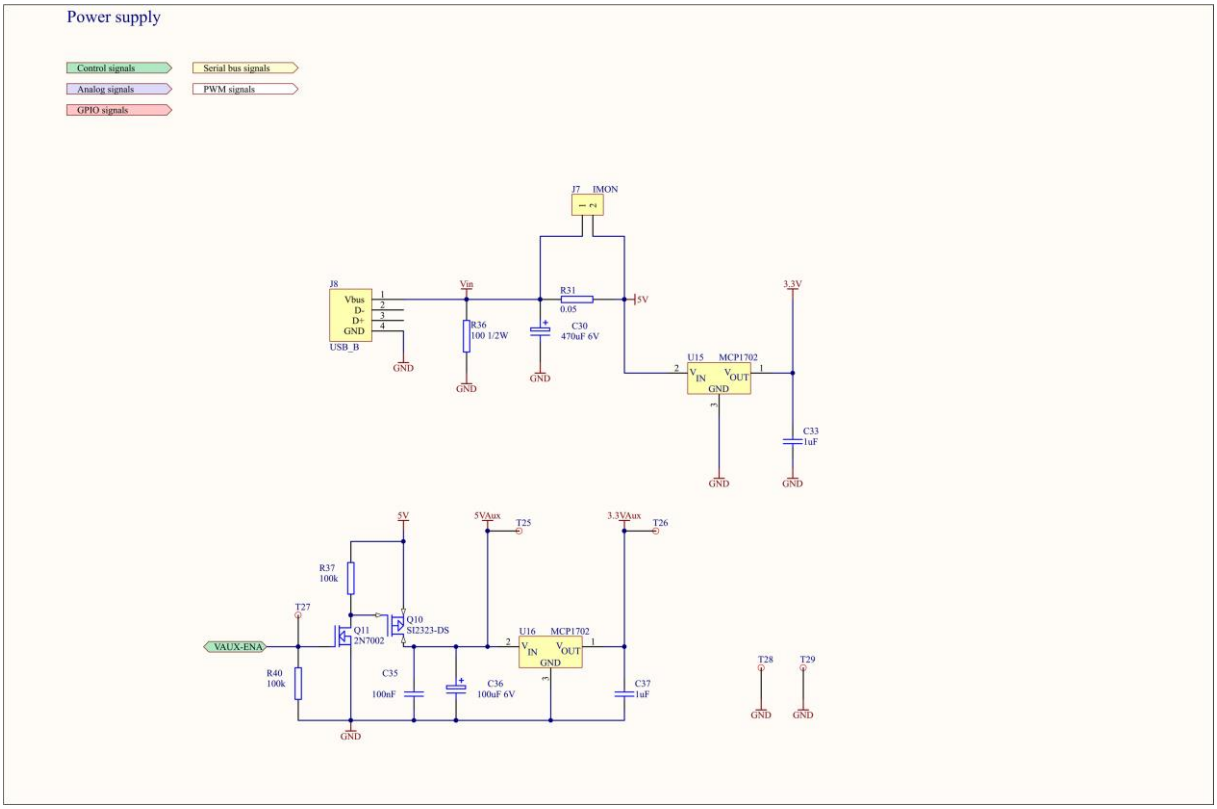
Power supply
Control signals
Serial bus signals
Analog signals
PWM signals
GPIO signals
J7 IMON
J8
Vbus
D-
D+
GND
USB_B
Vin
R31
0.05
5V
3.3V
R36
100 1/2W
C30
470uF 6V
U15 MCP1702
VIN
VOUT
GND
C33
1uF
5V
5VAux
T25
3.3VAux
T26
R37
100k
T27
Q11
2N7002
Q10
SI2323-DS
VAUX-ENA
U16 MCP1702
R40
100k
C35
100nF
C36
100uF 6V
C37
1uF
T28
T29

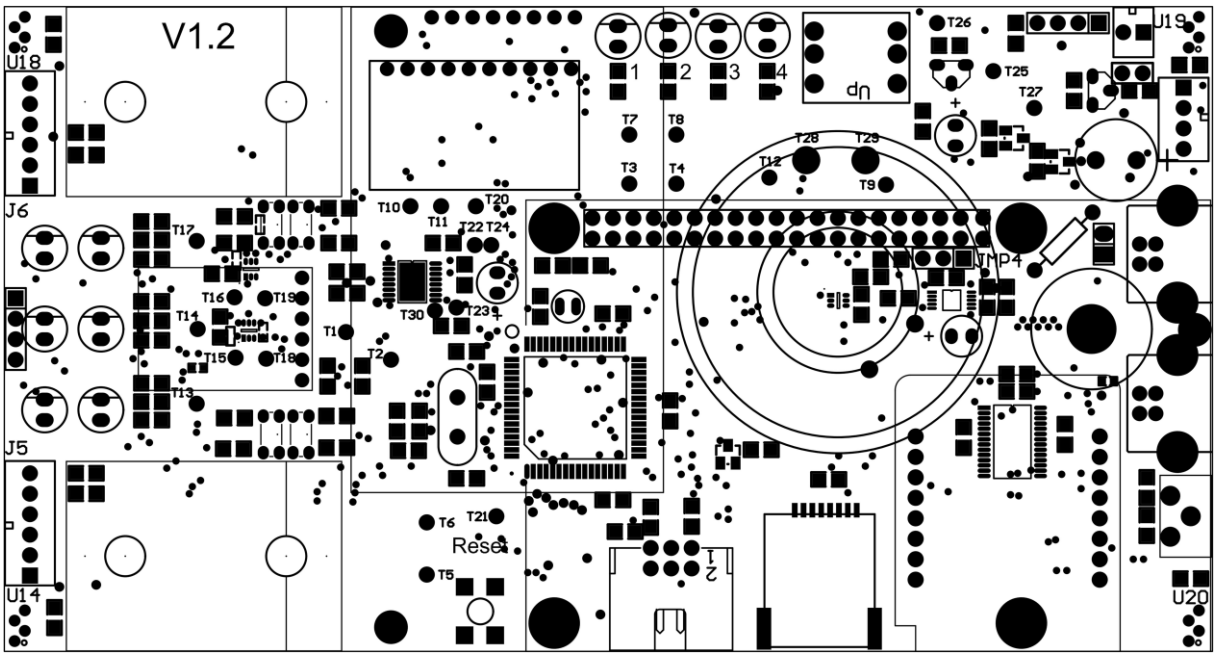
V1.2
U18
J6
J5
U14
U19
U20
Up
Reset
JMP4
T1
T2
T3
T4
T5
T6
T7
T8
T9
T10
T11
T12
T13
T14
T15
T16
T17
T18
T19
T20
T21
T22
T23
T24
T25
T26
T27
T28
T29
T30