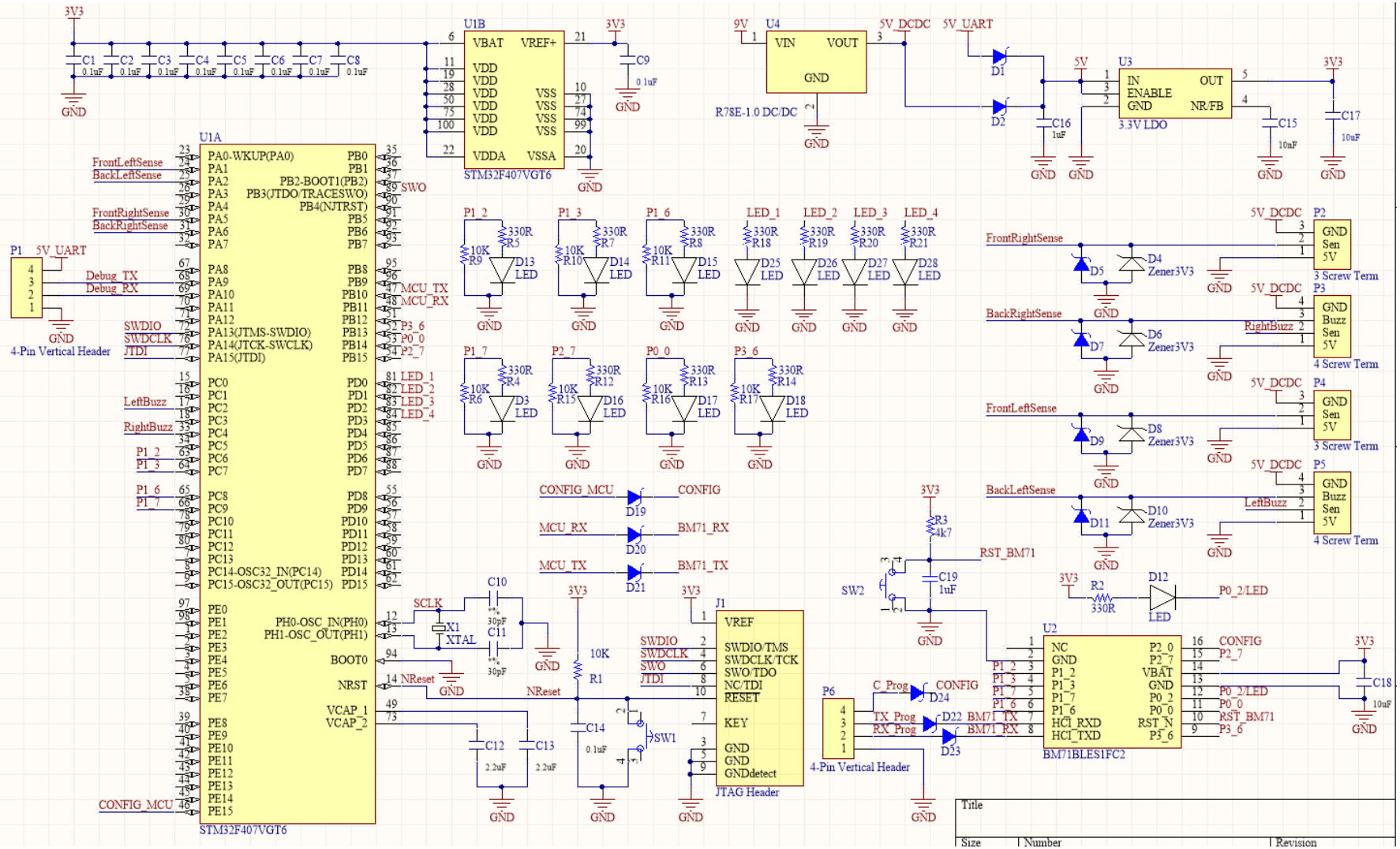
U1A
STM32F407VGT6
U1B
STM32F407VGT6
U4
R78E-1.0 DC/DC
U3
3.3V LDO
U2
BM71BLES1FC2
J1
JTAG Header
P1
4-Pin Vertical Header
P6
4-Pin Vertical Header
P2
P3
P4
P5
3 Screw Term
4 Screw Term
SW1
SW2
X1
XTAL
3V3
5V_DCDC
5V_UART
9V
5V
GND
FrontLeftSense
BackLeftSense
FrontRightSense
BackRightSense
Debug_TX
Debug_RX
SWDIO
SWDCLK
JTDI
SWO
MCU_TX
MCU_RX
LEFTBuzz
RightBuzz
CONFIG_MCU
CONFIG
BM71_RX
BM71_TX
RST_BM71
P0_2/LED
NReset
SCLK
C_Prog
TX_Prog
RX_Prog
Title
Size
Number
Revision