Lab6

box:

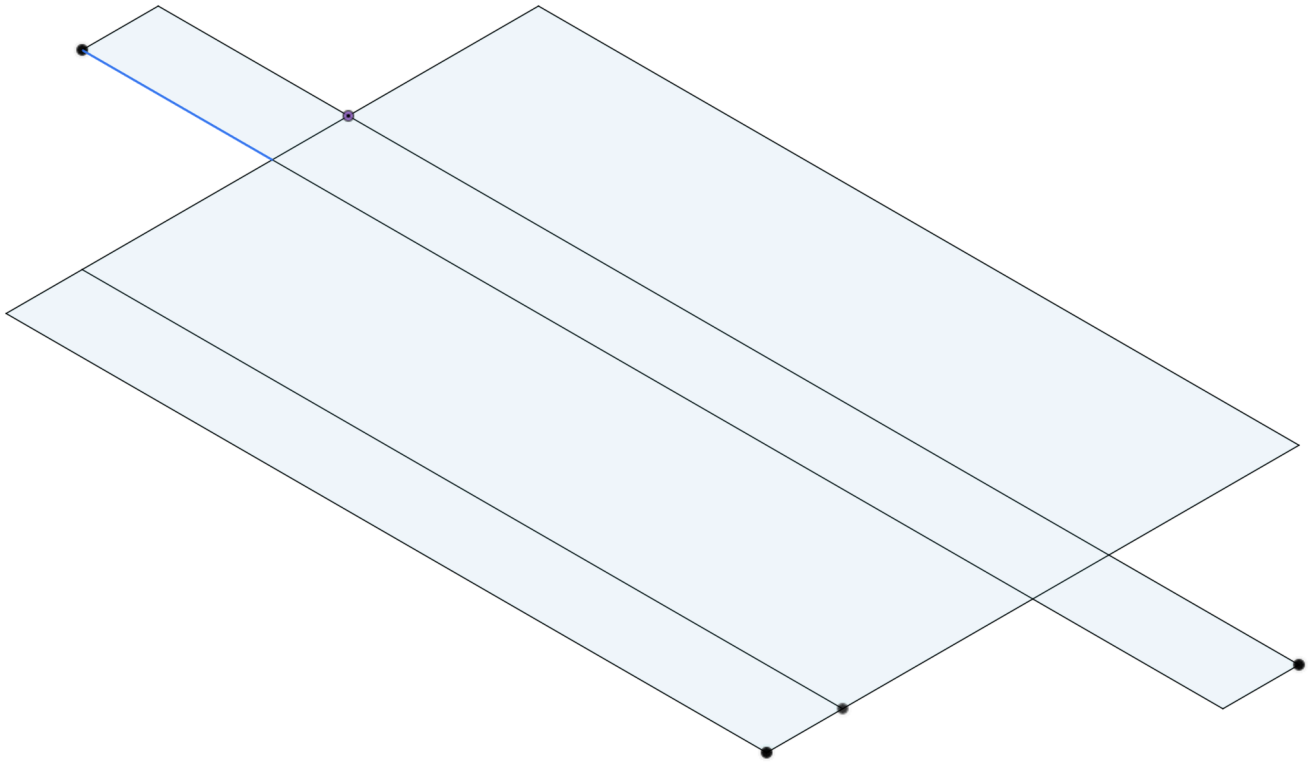

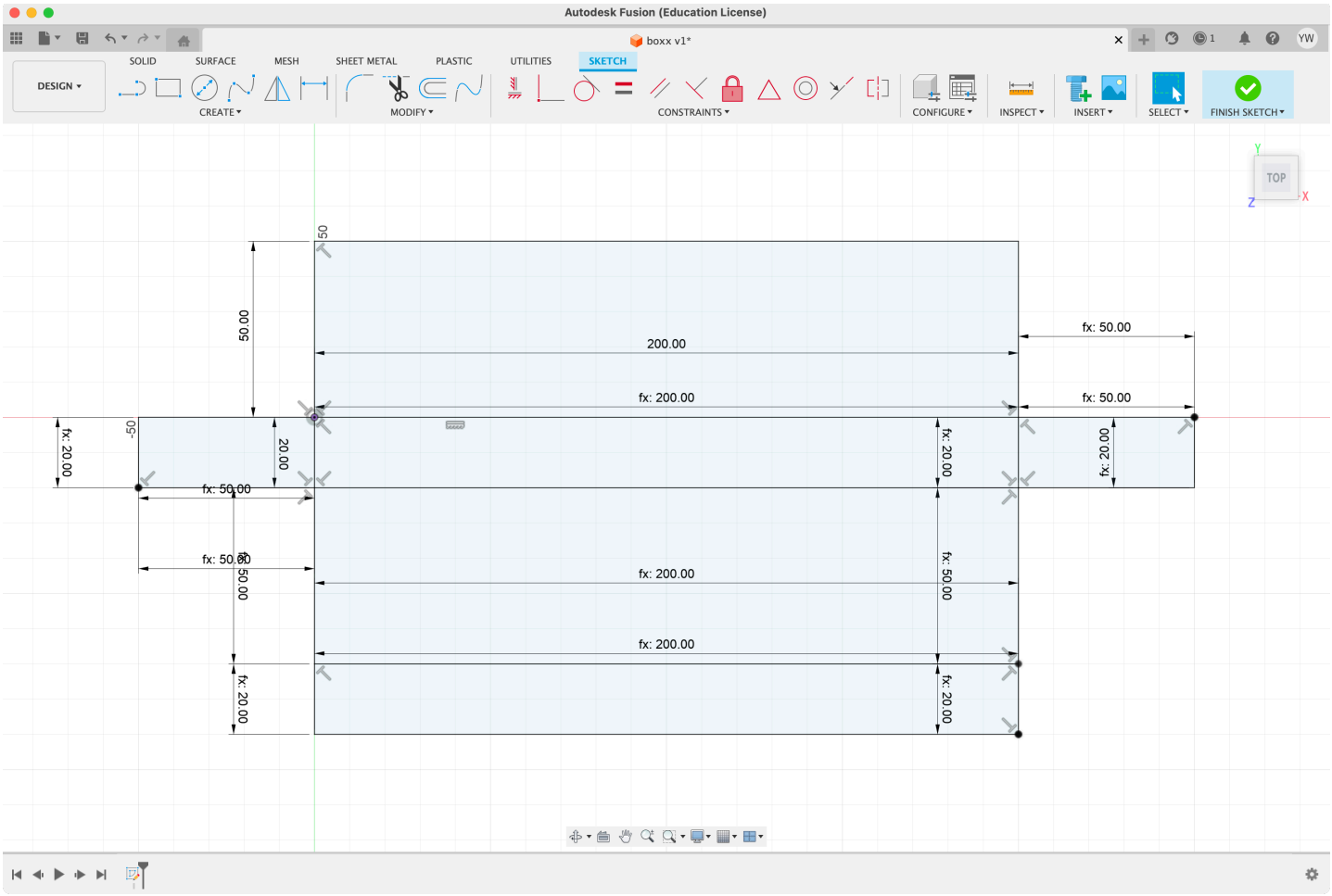
Autodesk Fusion (Education License)
boxx v1*
DESIGN
SOLID
SURFACE
MESH
SHEET METAL
PLASTIC
UTILITIES
SKETCH
CREATE
MODIFY
CONSTRAINTS
CONFIGURE
INSPECT
INSERT
SELECT
FINISH SKETCH
TOP
50
50.00
200.00
fx: 50.00
fx: 200.00
fx: 50.00
-50
fx: 20.00
20.00
fx: 20.00
fx: 20.00
fx: 50.00
fx: 50.00
fx: 50.00
fx: 200.00
fx: 50.00
fx: 200.00
fx: 20.00
fx: 20.00

Frame1:

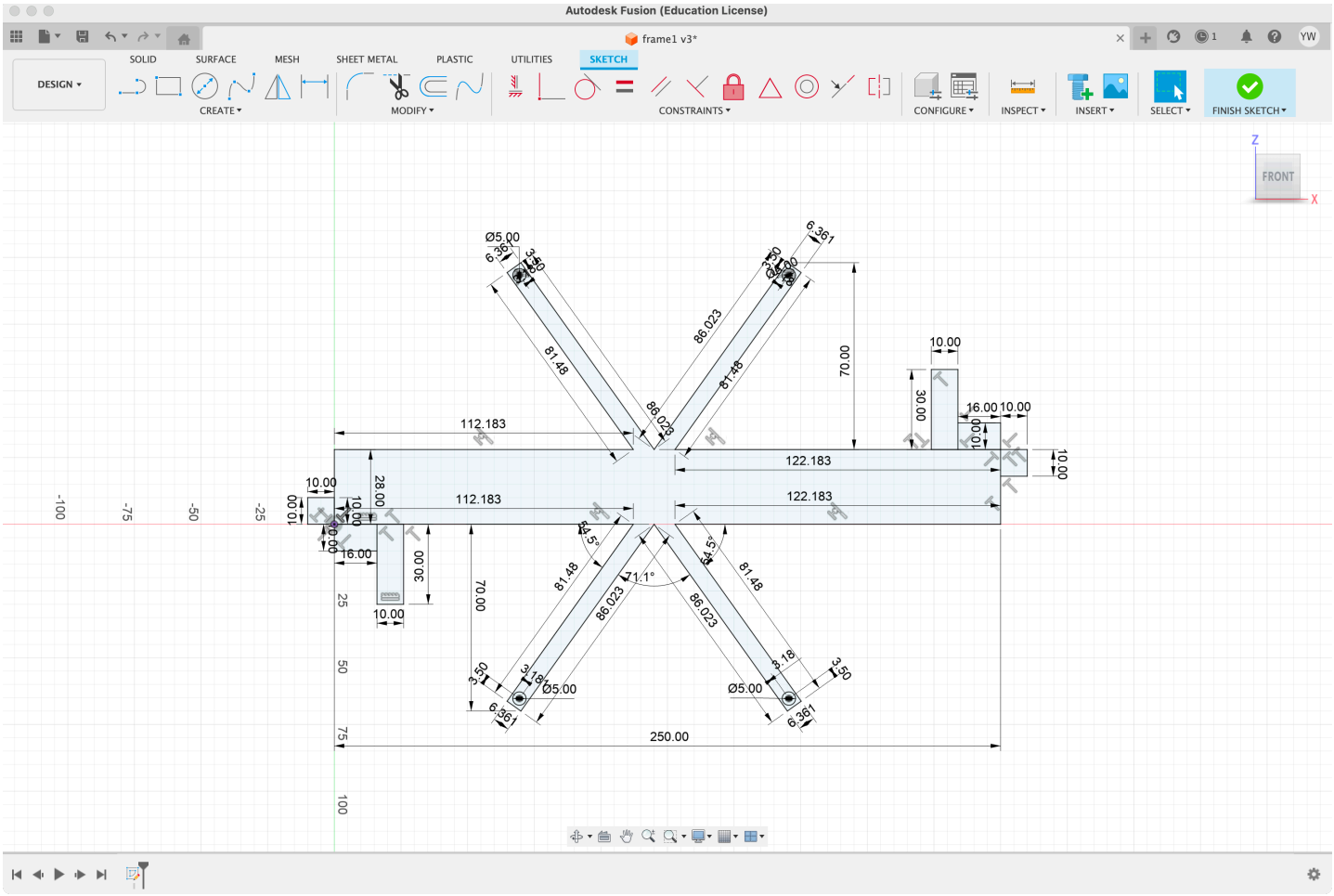
Autodesk Fusion (Education License)
frame1 v3*
SOLID
SURFACE
MESH
SHEET METAL
PLASTIC
UTILITIES
SKETCH
DESIGN
CREATE
MODIFY
CONSTRAINTS
CONFIGURE
INSPECT
INSERT
SELECT
FINISH SKETCH
FRONT
Ø5.00
6.361
3.50
81.48
86.023
71.1°
70.00
30.00
10.00
16.00
112.183
122.183
28.00
250.00

Frame2:

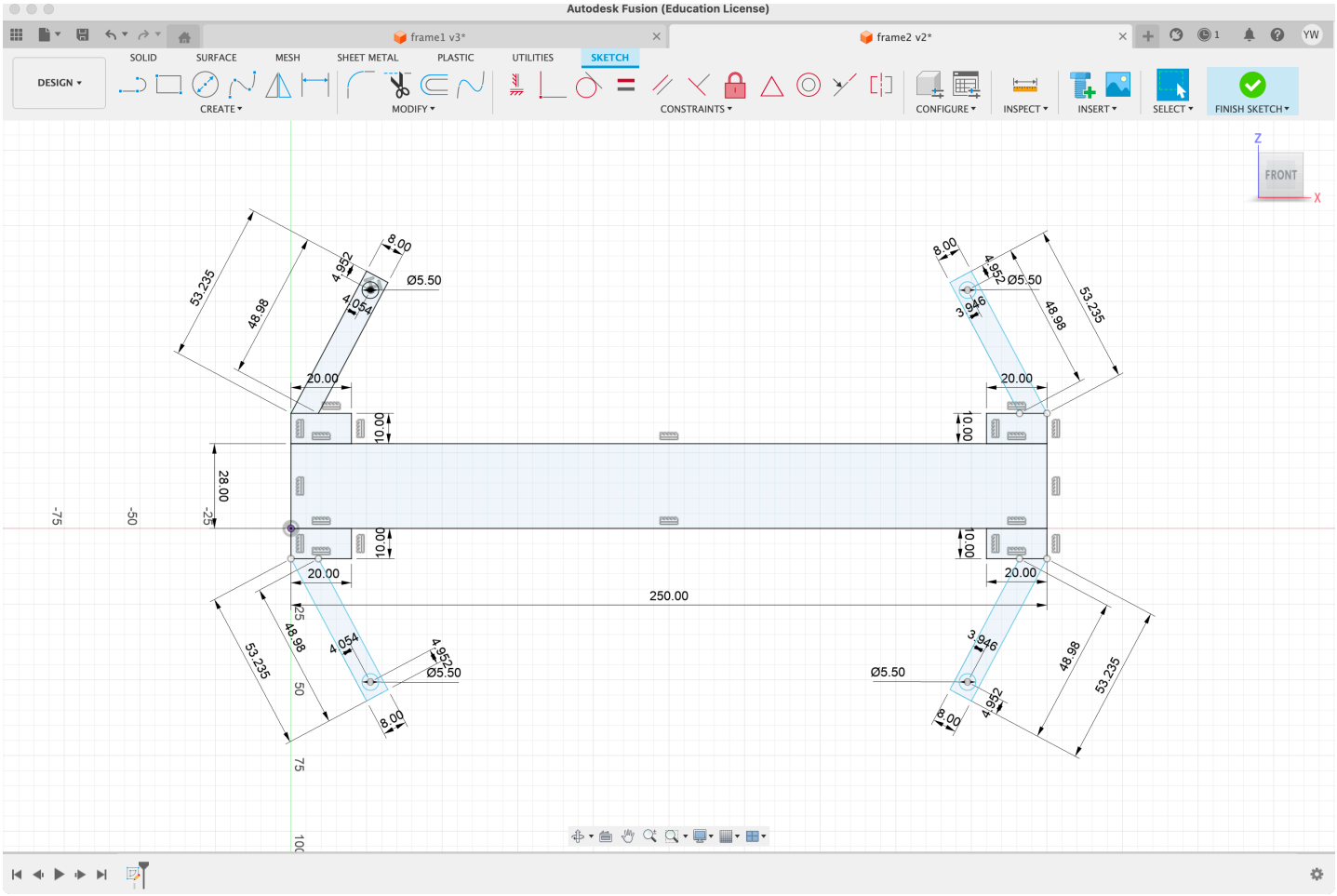
Autodesk Fusion (Education License)
frame1 v3*
frame2 v2*
DESIGN
SOLID
SURFACE
MESH
SHEET METAL
PLASTIC
UTILITIES
SKETCH
CREATE
MODIFY
CONSTRAINTS
CONFIGURE
INSPECT
INSERT
SELECT
FINISH SKETCH
FRONT
Z
X
Ø5.50
53.235
48.98
20.00
10.00
28.00
250.00
8.00
4.952
4.054
3.946

3d-frame:

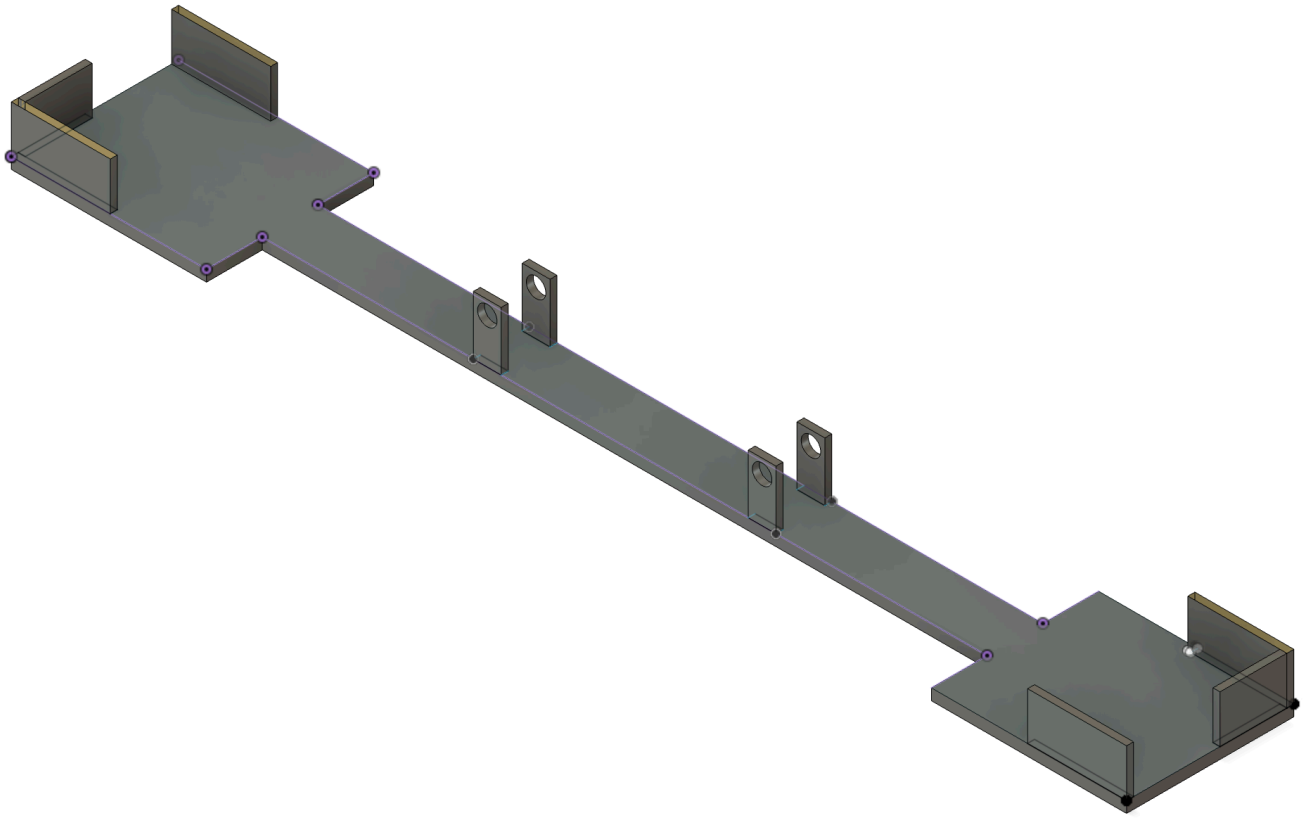

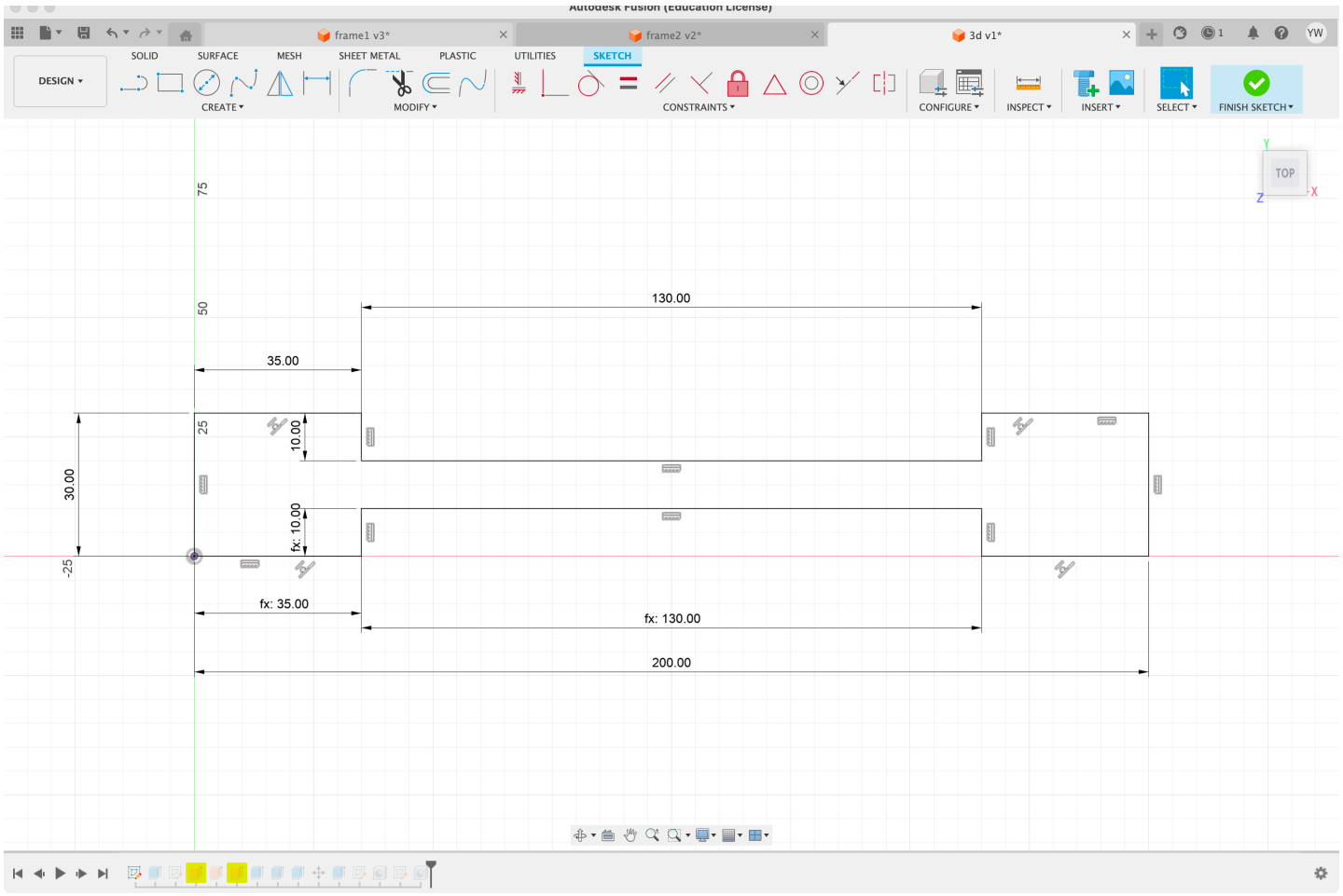
Autodesk Fusion (Education License)
frame1 v3*
frame2 v2*
3d v1*
SOLID
SURFACE
MESH
SHEET METAL
PLASTIC
UTILITIES
SKETCH
DESIGN
CREATE
MODIFY
CONSTRAINTS
CONFIGURE
INSPECT
INSERT
SELECT
FINISH SKETCH
TOP
75
50
25
-25
130.00
35.00
10.00
30.00
fx: 10.00
fx: 35.00
fx: 130.00
200.00

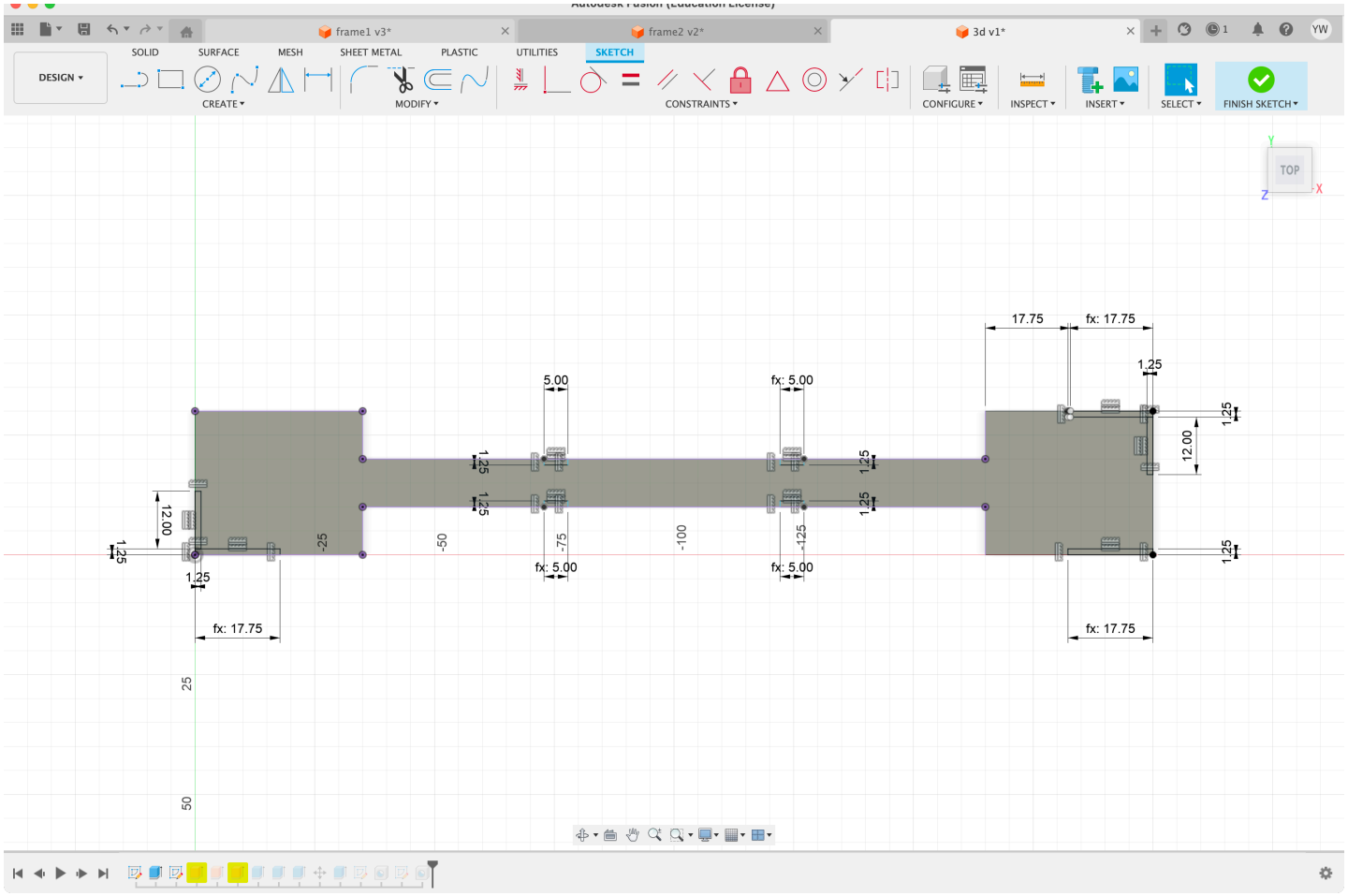
frame1 v3*
frame2 v2*
3d v1*
DESIGN
SOLID
SURFACE
MESH
SHEET METAL
PLASTIC
UTILITIES
SKETCH
CREATE
MODIFY
CONSTRAINTS
CONFIGURE
INSPECT
INSERT
SELECT
FINISH SKETCH
TOP
17.75
fx: 17.75
1.25
5.00
fx: 5.00
12.00
fx: 17.75
fx: 5.00
fx: 5.00
fx: 17.75
-25
-50
-75
-100
-125
25
50

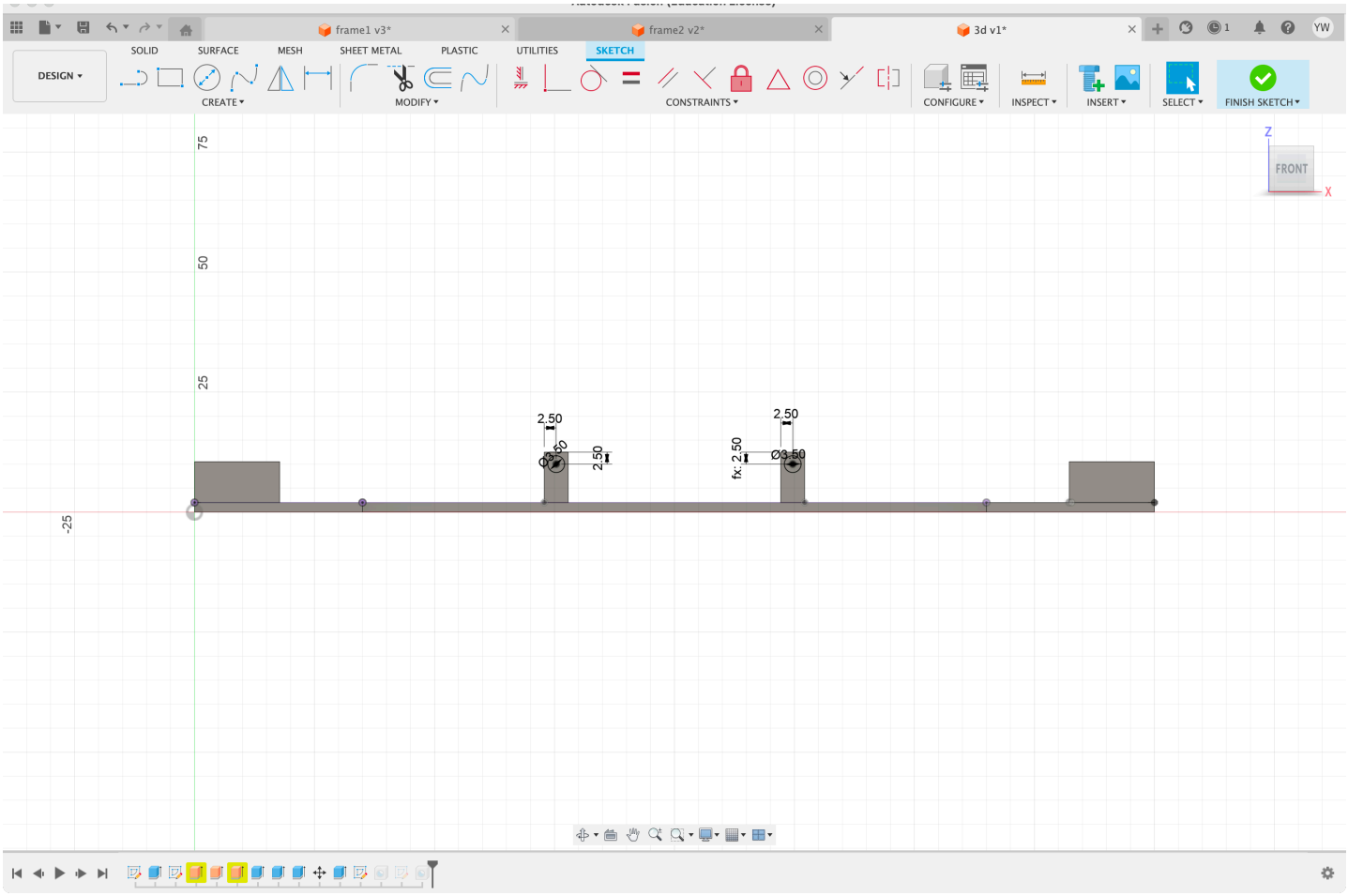

Not sure when can get the 3d print frame, but I've uploaded it into the queue and the system showed that this frame only 10.10g.