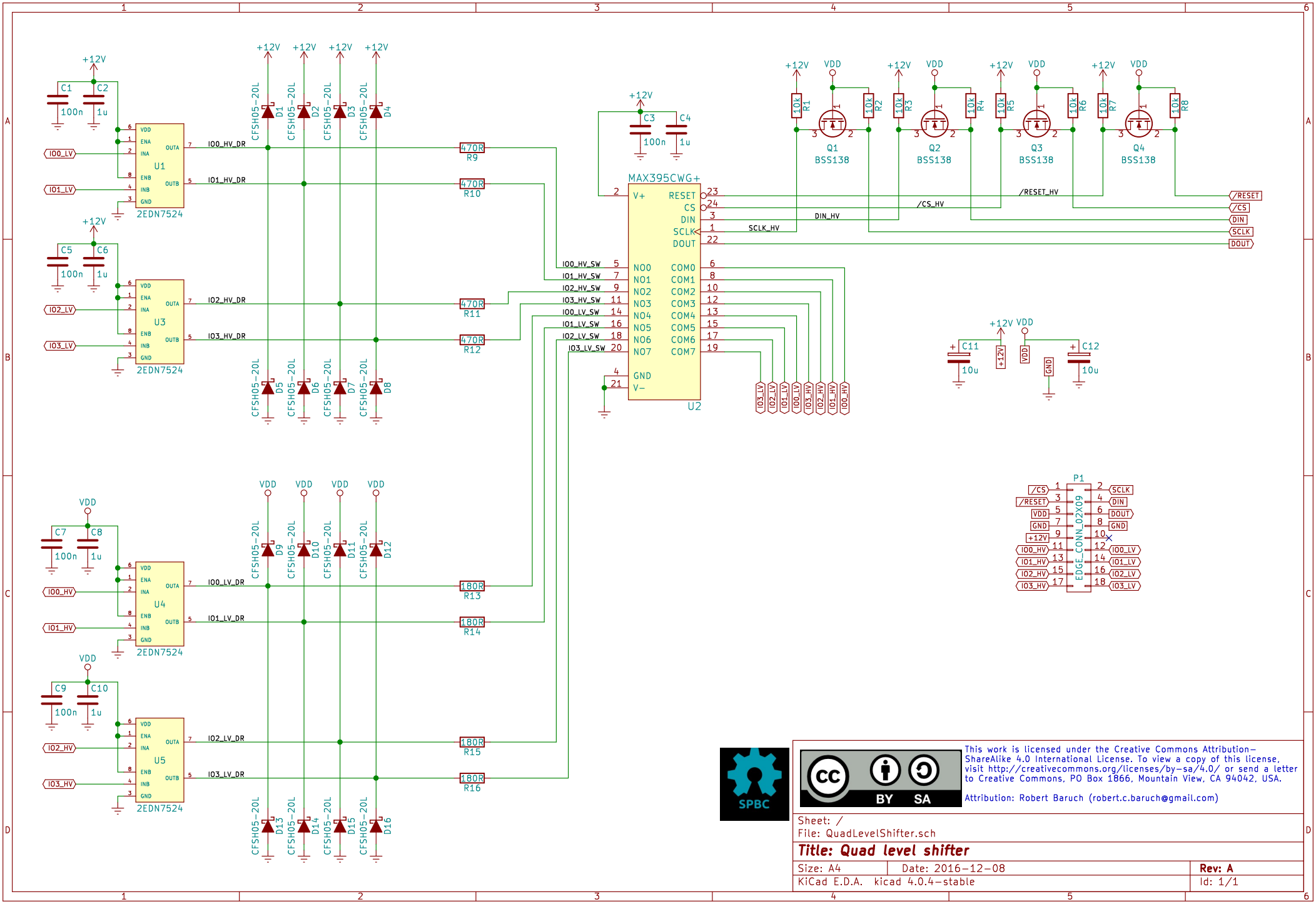

This work is licensed under the Creative Commons Attribution-ShareAlike 4.0 International License. To view a copy of this license, visit http://creativecommons.org/licenses/by-sa/4.0/ or send a letter to Creative Commons, PO Box 1866, Mountain View, CA 94042, USA.

Attribution: Robert Baruch (robert.c.baruch@gmail.com)

Sheet: /
File: QuadLevelShifter.sch

Title: Quad level shifter

Size: A4	Date: 2016-12-08	Rev: A
KiCad E.D.A. kicad 4.0.4-stable		Id: 1/1