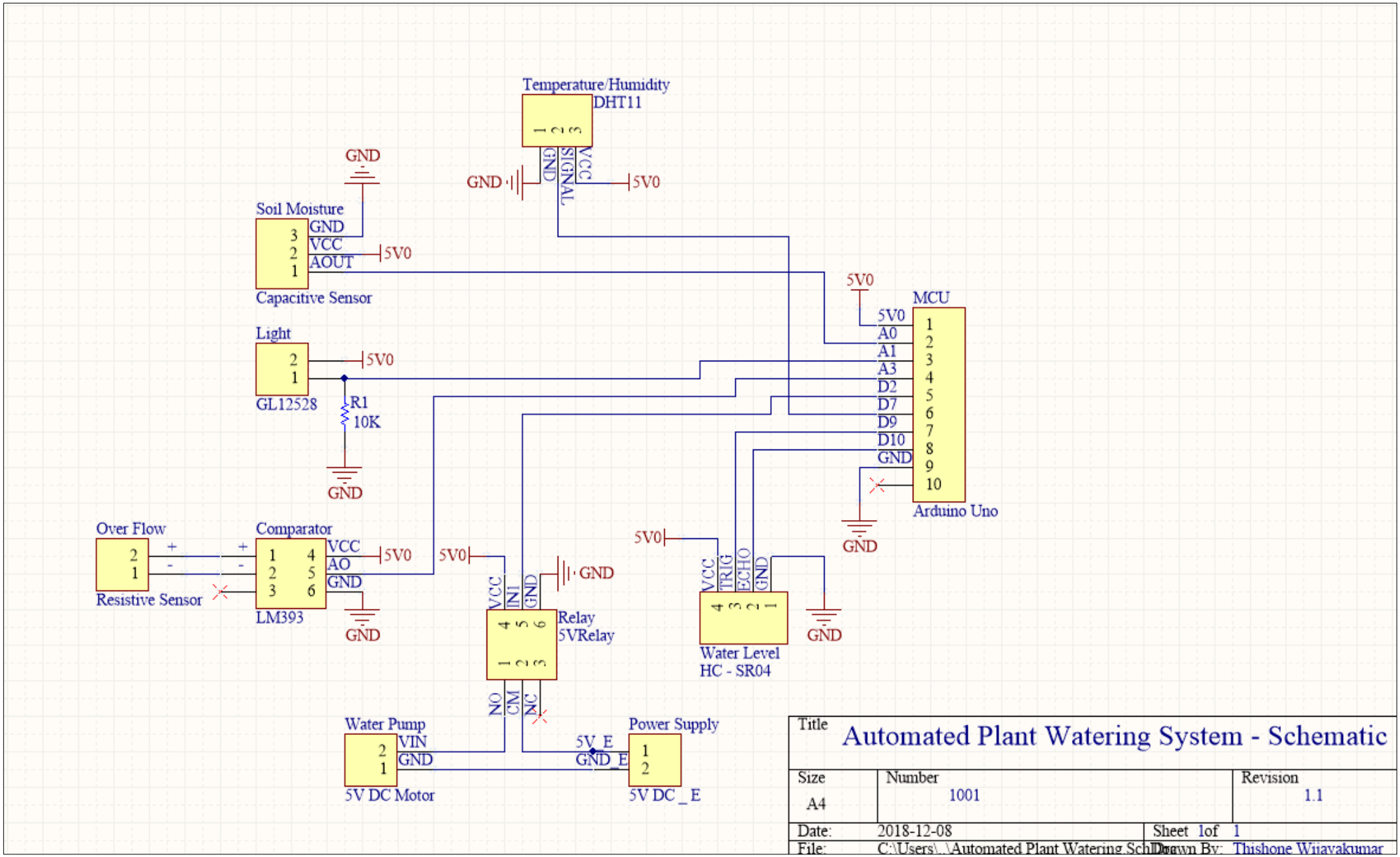
Temperature/Humidity
DHT11
GND
SIGNAL
VCC
5V0
GND
Soil Moisture
GND
VCC
AOUT
5V0
Capacitive Sensor
Light
5V0
GL12528
R1
10K
GND
5V0
MCU
5V0
A0
A1
A3
D2
D7
D9
D10
GND
Arduino Uno
GND
Over Flow
Resistive Sensor
Comparator
VCC
AO
GND
5V0
LM393
GND
5V0
VCC
IN1
GND
GND
Relay
5VRelay
NO
CM
NC
5V0
VCC
TRIG
ECHO
GND
Water Level
HC - SR04
GND
Water Pump
VIN
GND
5V DC Motor
5V_E
GND_E
Power Supply
5V DC _ E
Title
Automated Plant Watering System - Schematic
Size
A4
Number
1001
Revision
1.1
Date:
2018-12-08
Sheet 1of 1
File:
C:\Users\...\Automated Plant Watering Sch
Drawn By:
Thishone Wijayakumar