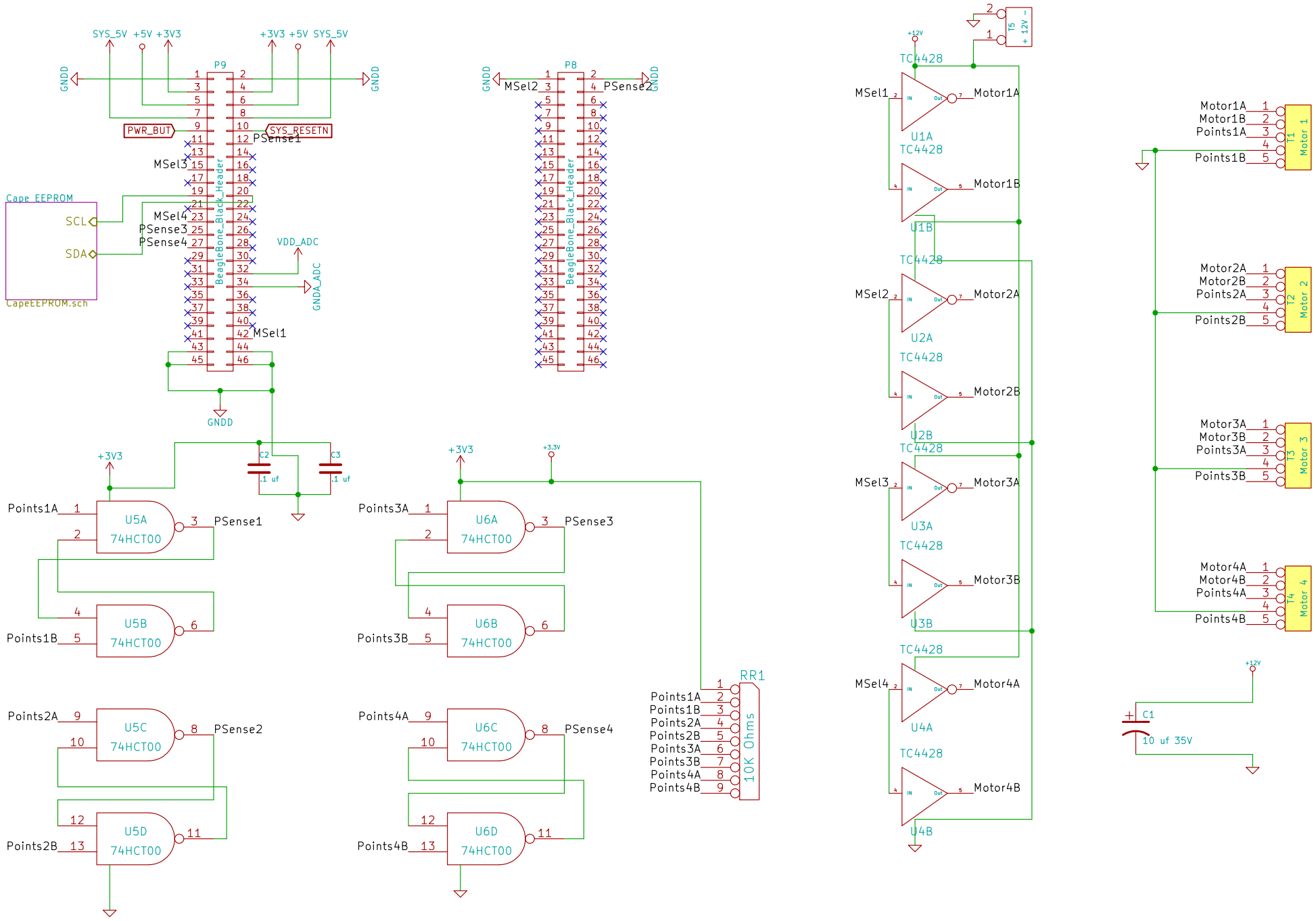
SYS_5V +5V +3V3
+3V3 +5V SYS_5V
GNDD
P9
PWR_BUT
SYS_RESETN
PSense1
MSel3
MSel4
PSense3
PSense4
VDD_ADC
GNDA_ADC
MSel1
BeagleBone_Black_Header
Cape EEPROM
SCL
SDA
CapeEEPROM.sch
P8
MSel2
PSense2
+3V3
C2
.1 uf
C3
.1 uf
Points1A
U5A
74HCT00
PSense1
Points1B
U5B
74HCT00
Points2A
U5C
74HCT00
PSense2
Points2B
U5D
74HCT00
Points3A
U6A
74HCT00
PSense3
Points3B
U6B
74HCT00
Points4A
U6C
74HCT00
PSense4
Points4B
U6D
74HCT00
+3.3V
RR1
10K Ohms
+12V
TC4428
U1A
U1B
U2A
U2B
U3A
U3B
U4A
U4B
MSel1
MSel2
MSel3
MSel4
Motor1A
Motor1B
Motor2A
Motor2B
Motor3A
Motor3B
Motor4A
Motor4B
T5
+ 12V –
T1
Motor 1
T2
Motor 2
T3
Motor 3
T4
Motor 4
Points1A
Points1B
Points2A
Points2B
Points3A
Points3B
Points4A
Points4B
C1
10 uf 35V

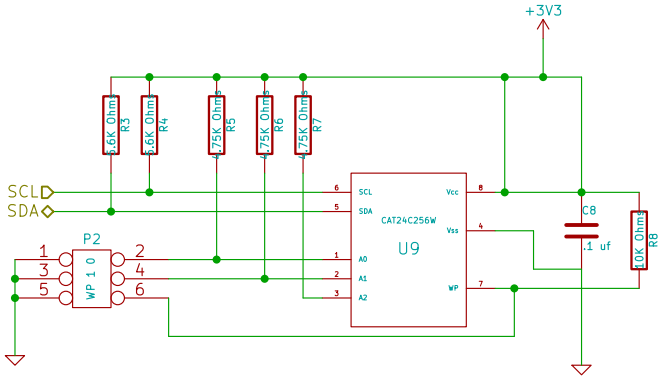
+3V3
2.6K Ohm
R3
2.6K Ohm
R4
2.75K Ohm
R5
2.75K Ohm
R6
2.75K Ohm
R7
SCL
SDA
P2
WP 1 0
SCL
SDA
CAT24C256W
U9
A0
A1
A2
Vcc
Vss
WP
C8
.1 uf
10K Ohm
R8