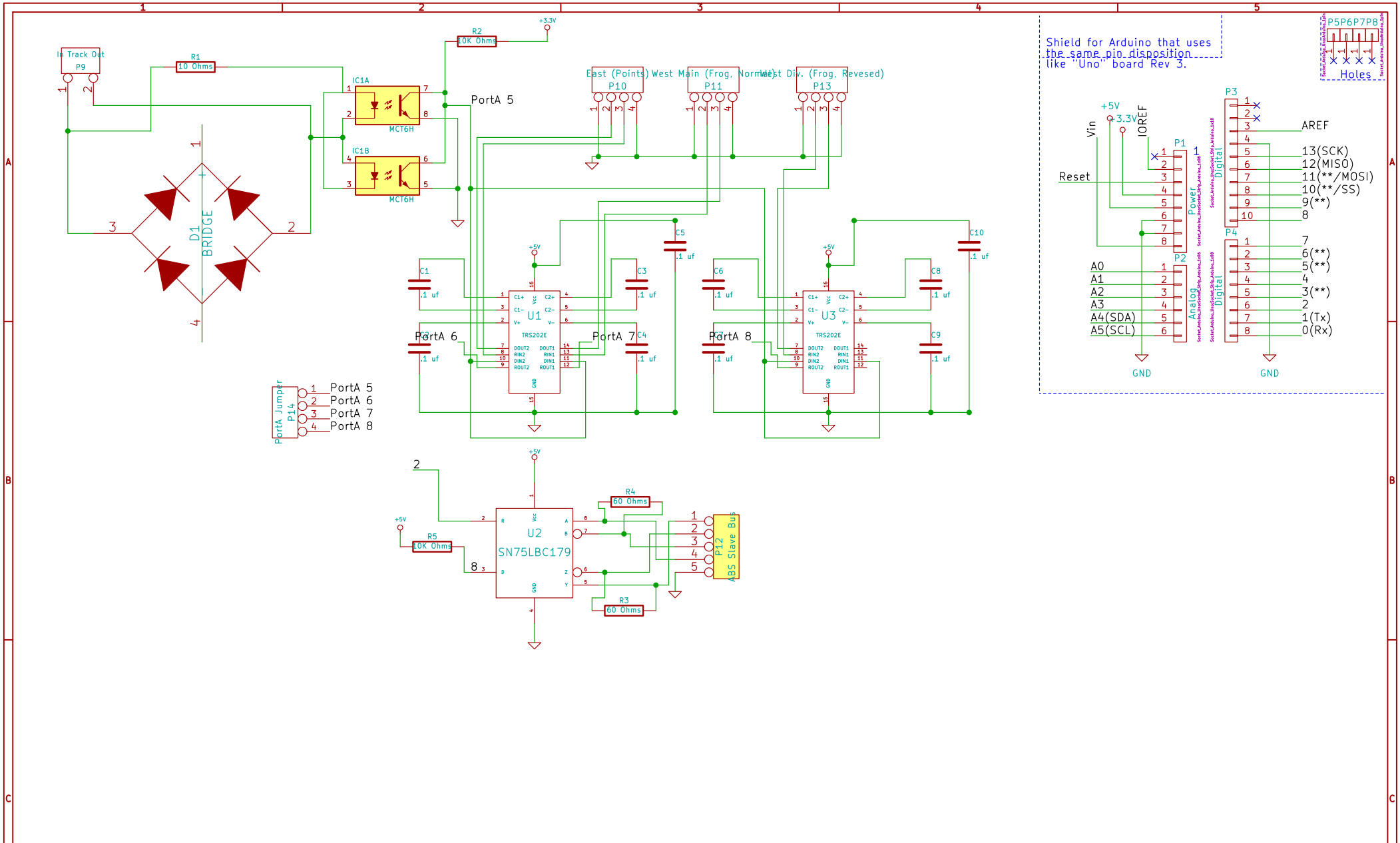

File: STM32ShieldForMetroMiniSlaves.sch		
Sheet: /		
Title:		
Size: A4	Date: 23 jun 2018	Rev:
KiCad E.D.A.		Id: 1/1