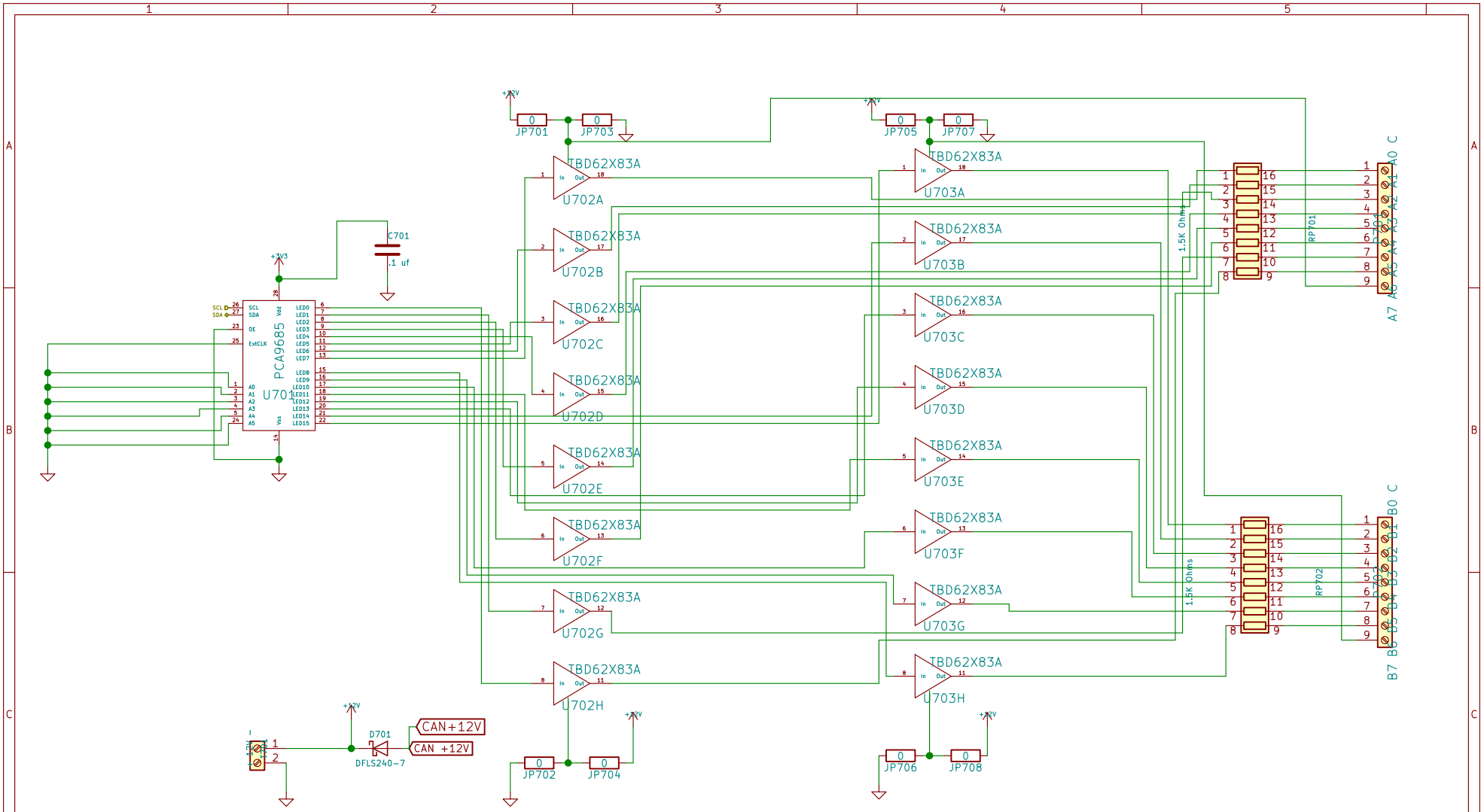

PWM Driver

Deepwoods Software

Sheet: /PWM LED Signal Drivers/

File: PCA9685Driver.sch

Title: ESP32 S3 Multifunction Board

Size: USLetter	Date:	**Rev: 1.0**
KiCad E.D.A. kicad 4.0.7+dfsg1-1ubuntu2		Id: 7/8