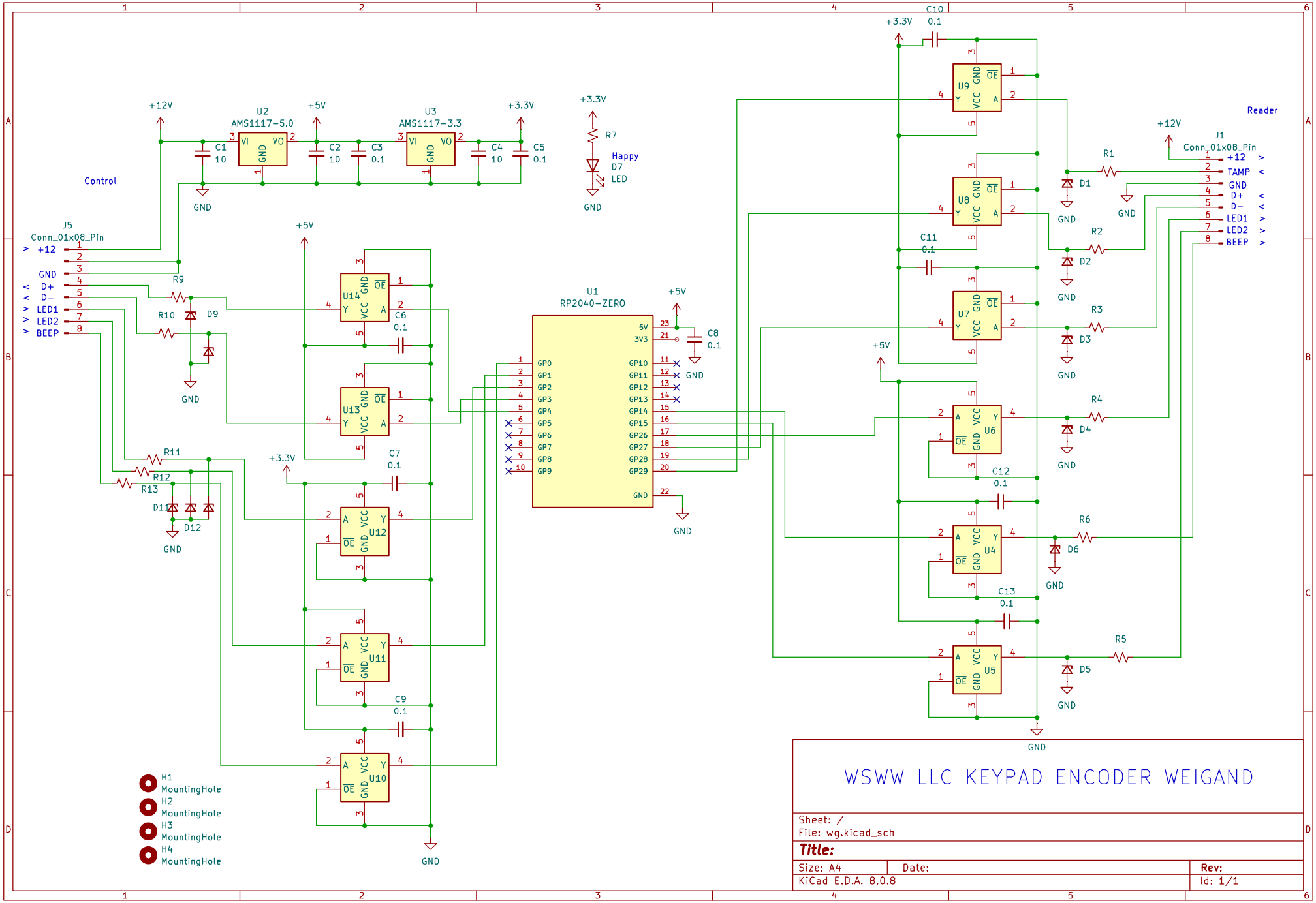
WSWW LLC KEYPAD ENCODER WEIGAND
Sheet: /
File: wg.kicad_sch
Title:
Size: A4
Date:
Rev:
KiCad E.D.A. 8.0.8
Id: 1/1
Control
Reader
J5
Conn_01x08_Pin
+12
GND
D+
D-
LED1
LED2
BEEP
J1
Conn_01x08_Pin
TAMP
U2
AMS1117-5.0
U3
AMS1117-3.3
U1
RP2040-ZERO
Happy
D7
LED
R7
C1 10
C2 10
C3 0.1
C4 10
C5 0.1
C6 0.1
C7 0.1
C8 0.1
C9 0.1
C10 0.1
C11 0.1
C12 0.1
C13 0.1
R1
R2
R3
R4
R5
R6
R9
R10
R11
R12
R13
D1
D2
D3
D4
D5
D6
D9
D11
D12
U4
U5
U6
U7
U8
U9
U10
U11
U12
U13
U14
H1 MountingHole
H2 MountingHole
H3 MountingHole
H4 MountingHole