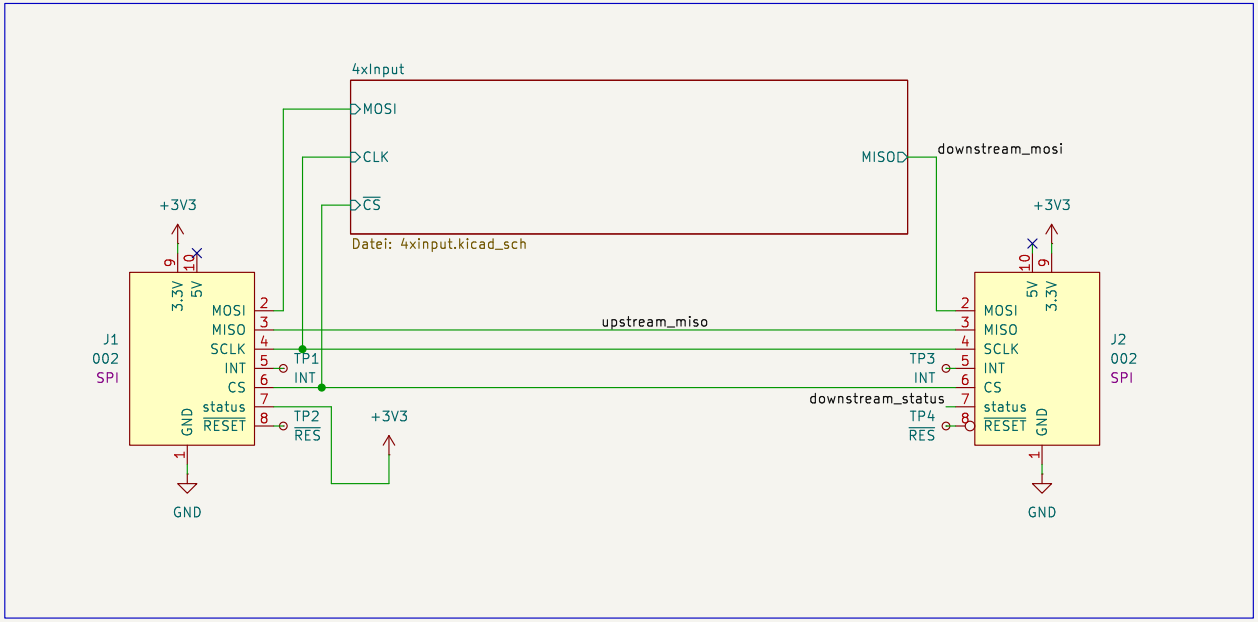

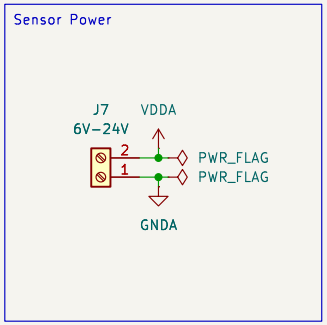

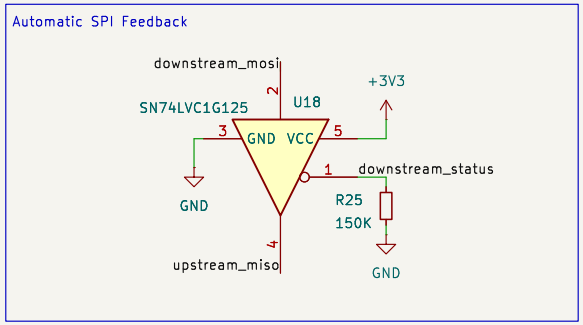

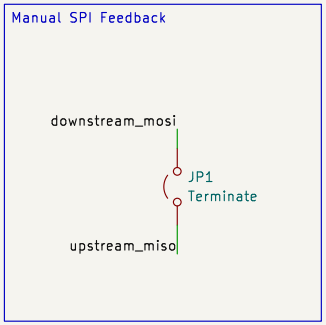

Sheet: /
File: multi_input_edgy.kicad_sch

Title: 4xMultiInput

Size: A4	Date: 2024-11-11	**Rev: V1.1**
KiCad E.D.A. 8.99.0-unknown		Id: 1/6

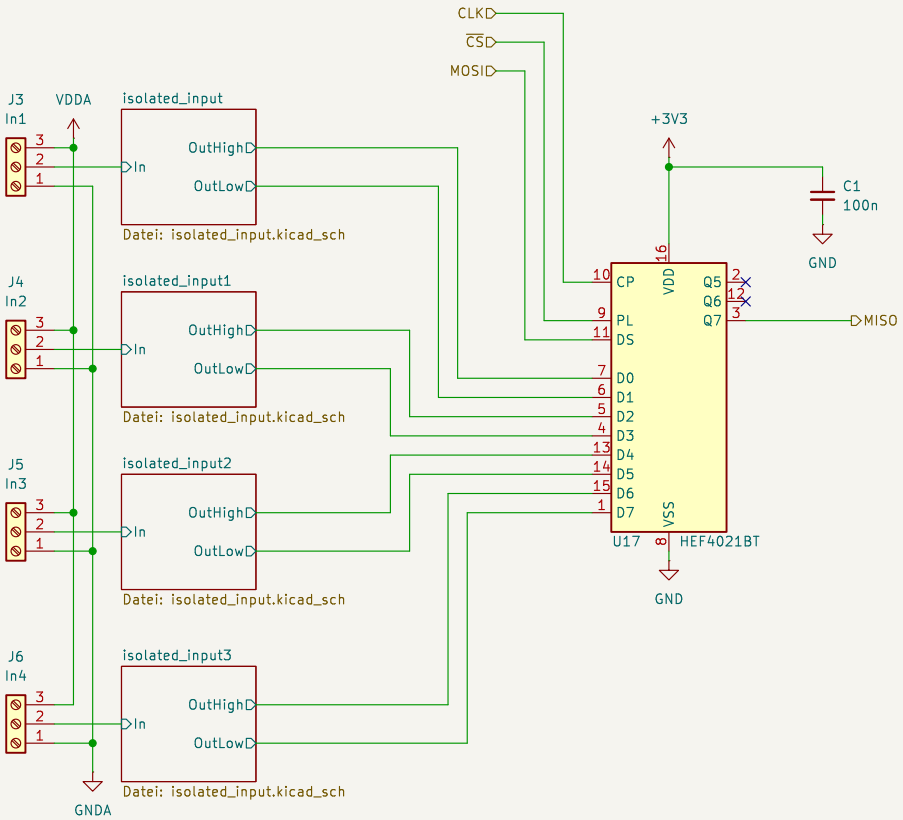

Sheet: /4xInput/
File: 4xinput.kicad_sch

Title: 4xMultiInput

Size: A4	Date: 2024-11-11	Rev: V1.1
KiCad E.D.A. 8.99.0-unknown		Id: 2/6

IN	OutHigh	OutLow	green	orange
Z(VDDA/2)	GND	GND	0	0
VDDA	3V3	GND	1	0
GNDA	GND	3V3	0	1

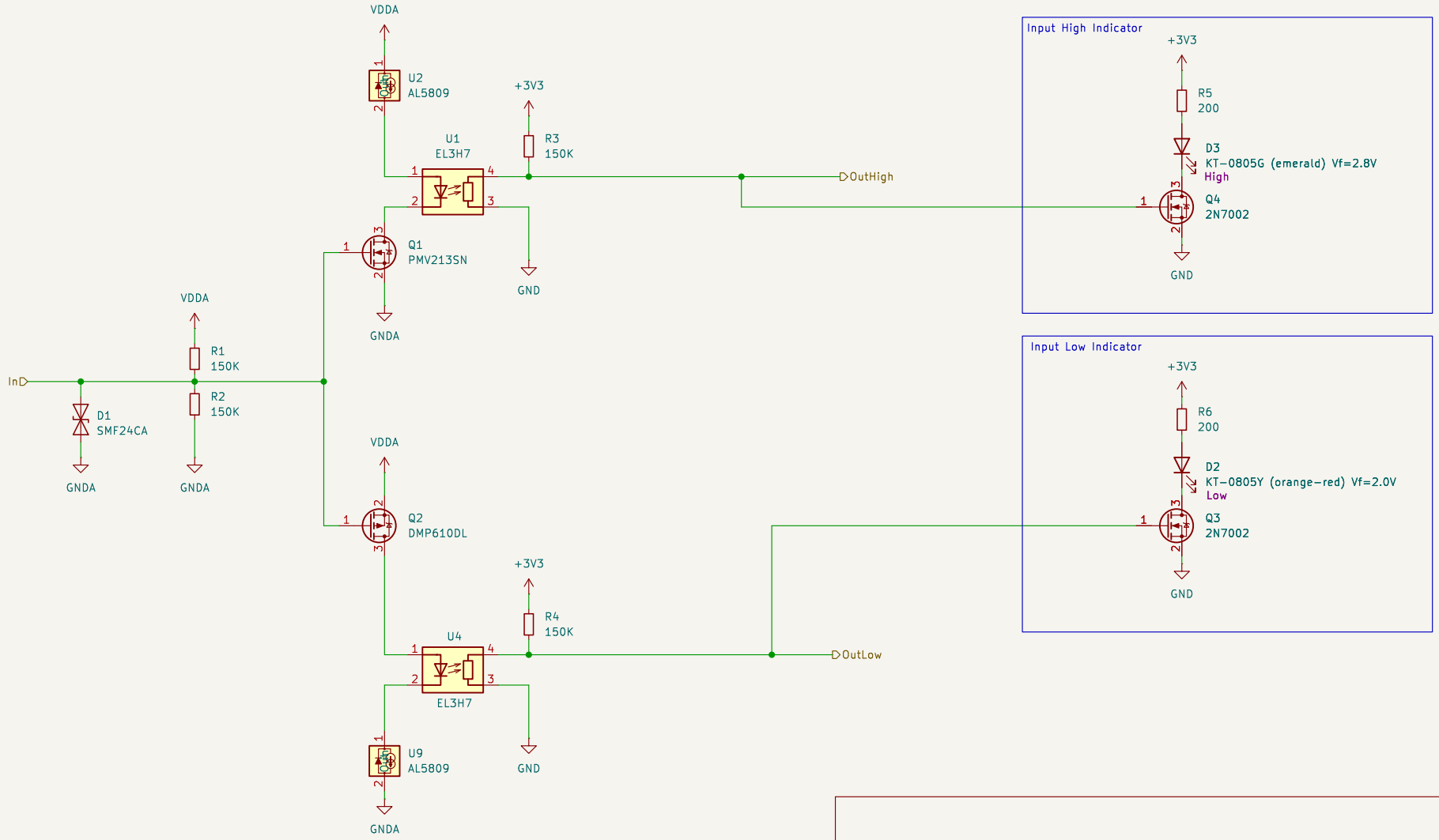

Sheet: /4xInput/isolated_input/
File: isolated_input.kicad_sch

Title: 4xMultiInput

Size: A4	Date: 2024-11-11	Rev: V1.1
KiCad E.D.A. 8.99.0-unknown		Id: 3/6

IN	OutHigh	OutLow	green	orange
Z(VDDA/2)	GND	GND	0	0
VDDA	3V3	GND	1	0
GNDA	GND	3V3	0	1

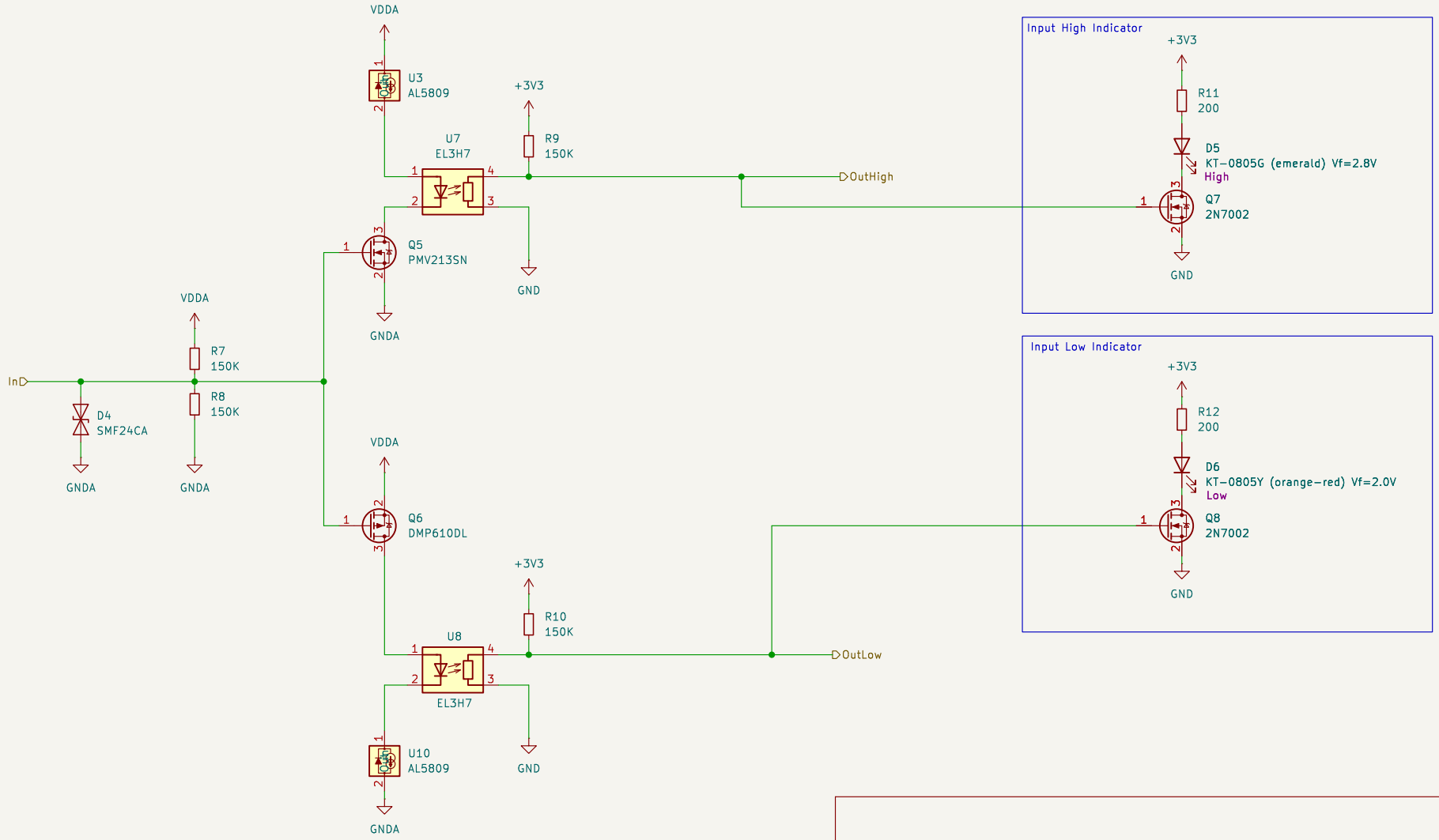

Sheet: /4xInput/isolated_input1/
File: isolated_input.kicad_sch

Title: 4xMultiInput

Size: A4	Date: 2024-11-11	Rev: V1.1
KiCad E.D.A. 8.99.0-unknown		Id: 4/6

IN	OutHigh	OutLow	green	orange
Z(VDDA/2)	GND	GND	0	0
VDDA	3V3	GND	1	0
GNDA	GND	3V3	0	1

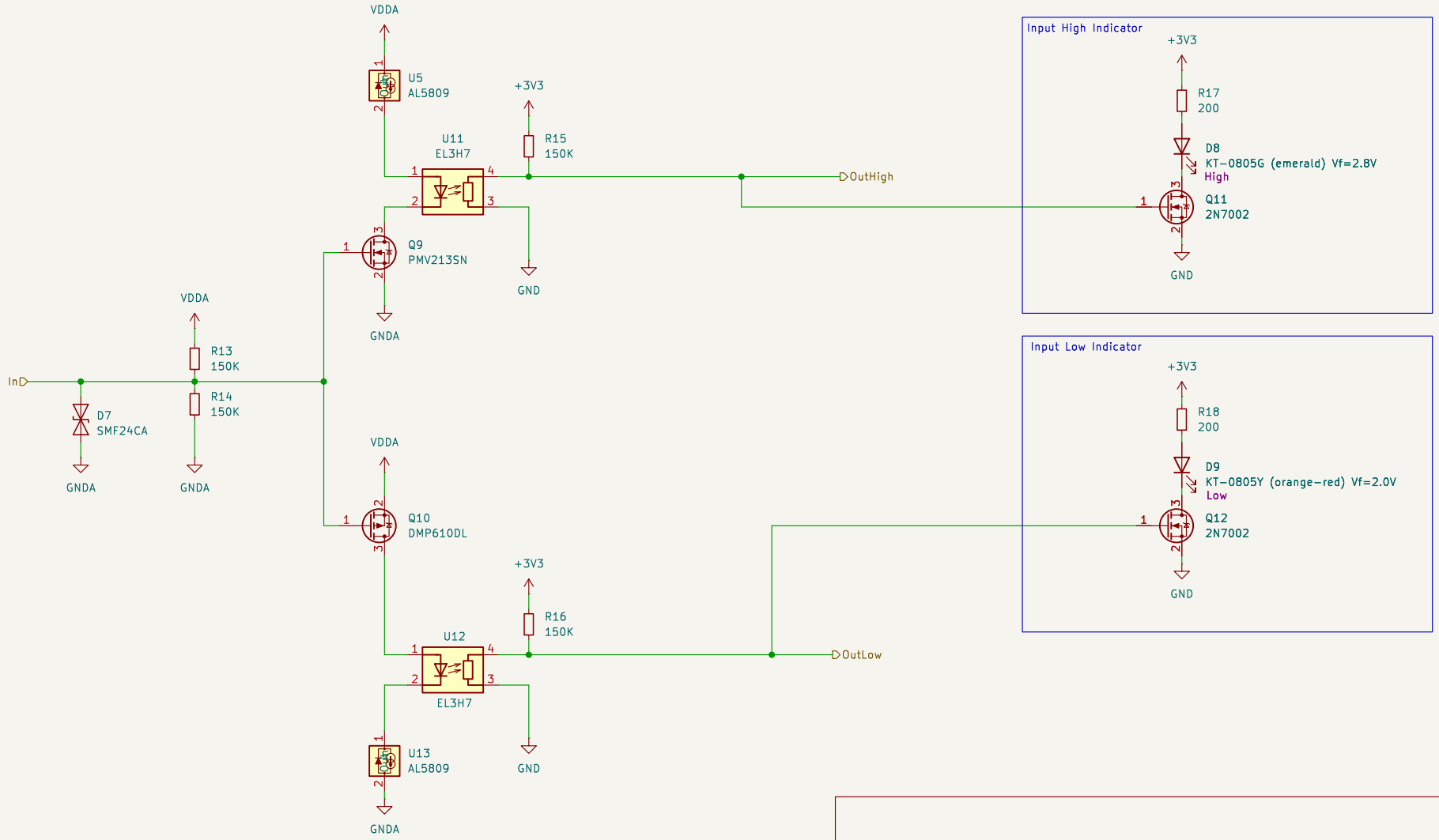

Sheet: /4xInput/isolated_input2/
File: isolated_input.kicad_sch

Title: 4xMultiInput

Size: A4	Date: 2024-11-11	Rev: V1.1
KiCad E.D.A. 8.99.0-unknown		Id: 5/6

IN	OutHigh	OutLow	green	orange
Z(VDDA/2)	GND	GND	0	0
VDDA	3V3	GND	1	0
GNDA	GND	3V3	0	1

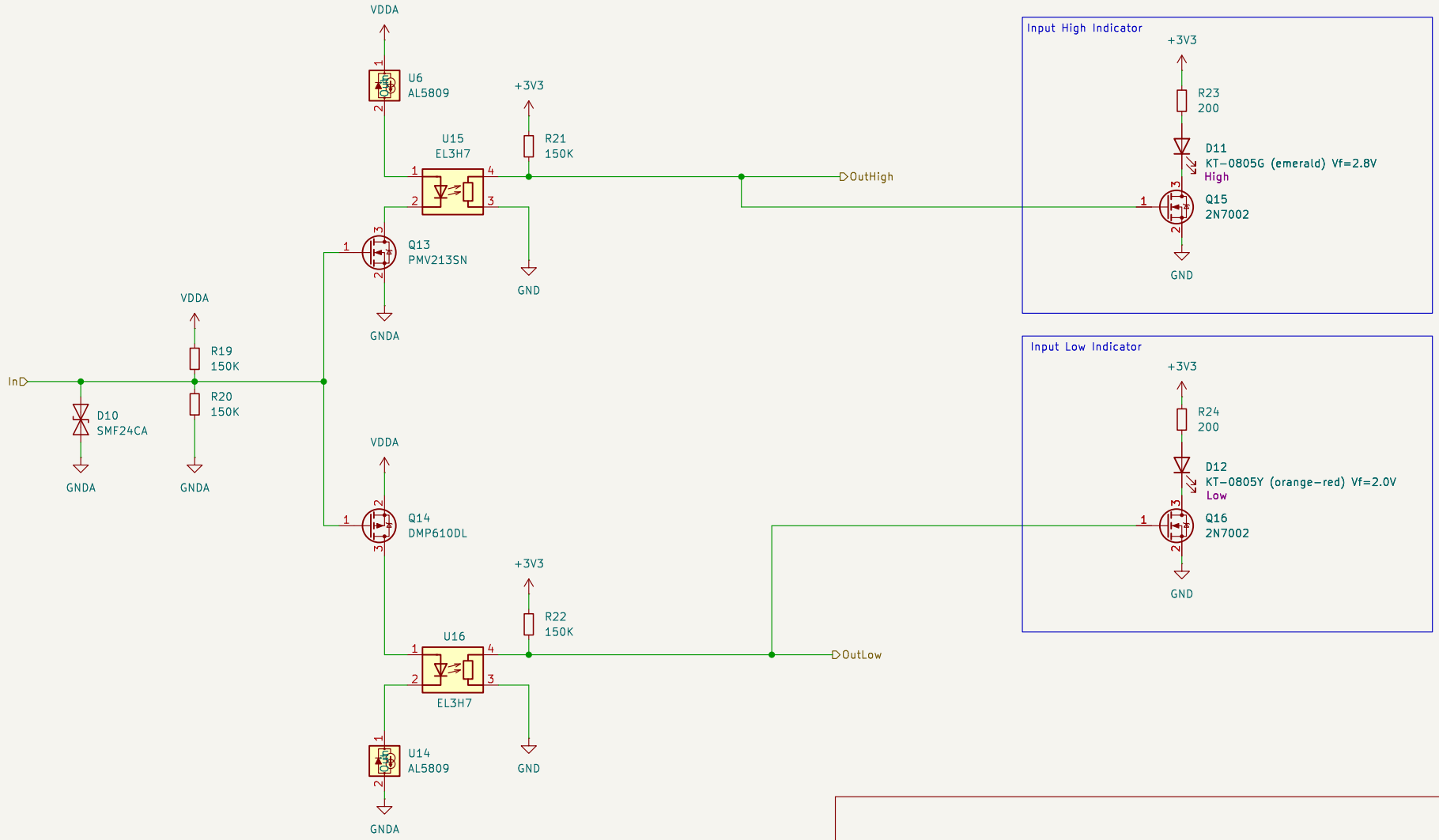

Sheet: /4xInput/isolated_input3/
File: isolated_input.kicad_sch

Title: 4xMultiInput

Size: A4	Date: 2024-11-11	Rev: V1.1
KiCad E.D.A. 8.99.0-unknown		Id: 6/6