Power System Protection Lecture Notes

Mohammed T. Lazim Alzuhairi

Professor of Electrical and Electronics Engineering
Electrical Engineering Department
Philadelphia University, Jordan

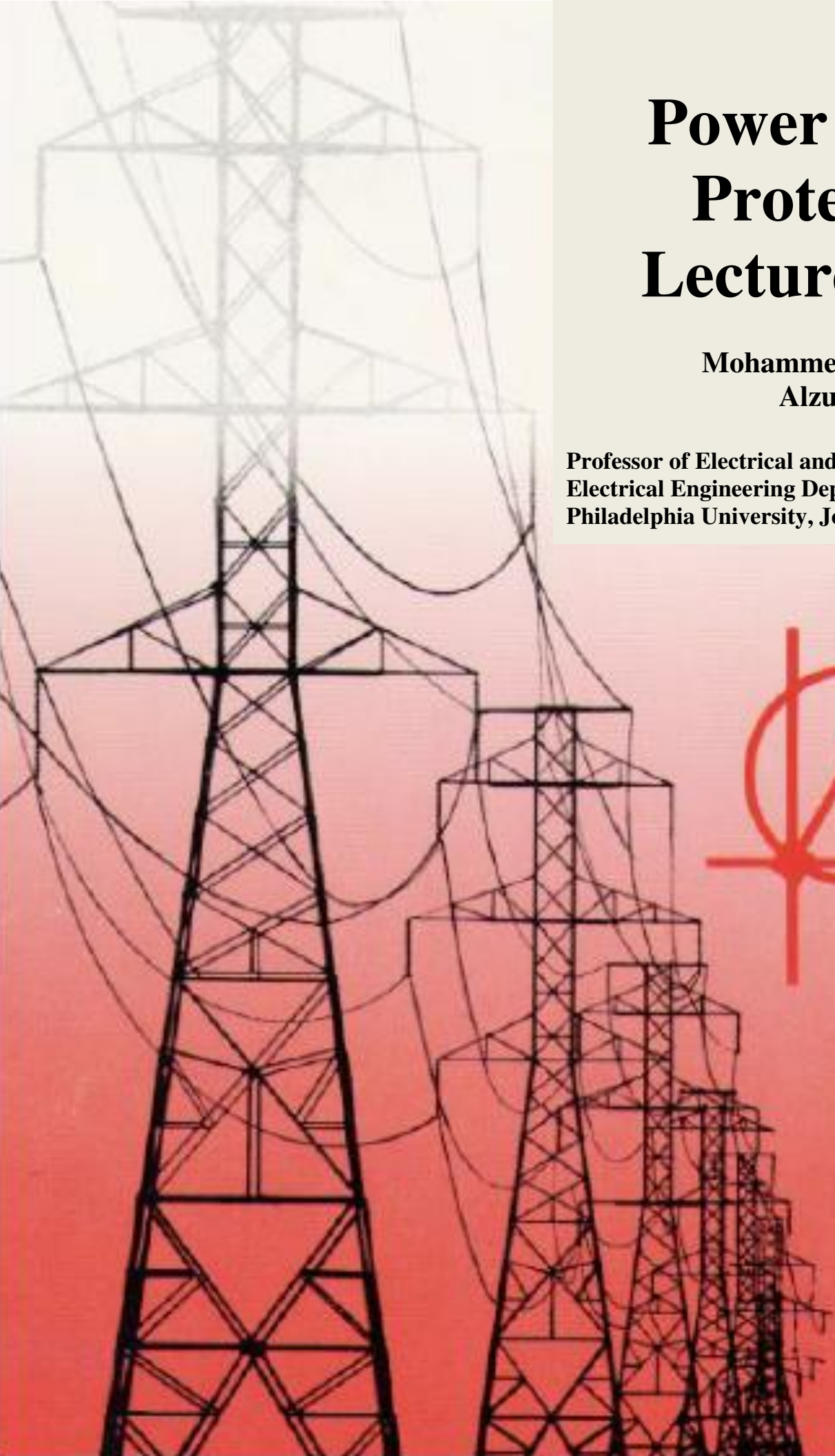

Power System protection

Introduction

- Protection is the art or science of continuously monitoring the power system, detecting the presence of a fault and initiating the correct tripping of the circuit breaker.

- The objectives of power system protection are to :
  — Limit the extent and duration of service interruption whenever equipment failure, human error, or adverse natural events occur on any portion of the system
  — Minimize damage to the system components involved in the failure and Prevention of human injury

- Protection engineering concerned with the design and operation of "protection schemes".

- Protection schemes are specialized control systems that monitor the power system, detecting faults or abnormal conditions and then initiate correct action.

- In this course the power system is considered as all the plant and equipment necessary to generate, transmit, distribute and utilize the electric power.

The Construction of a Power system : Primary system

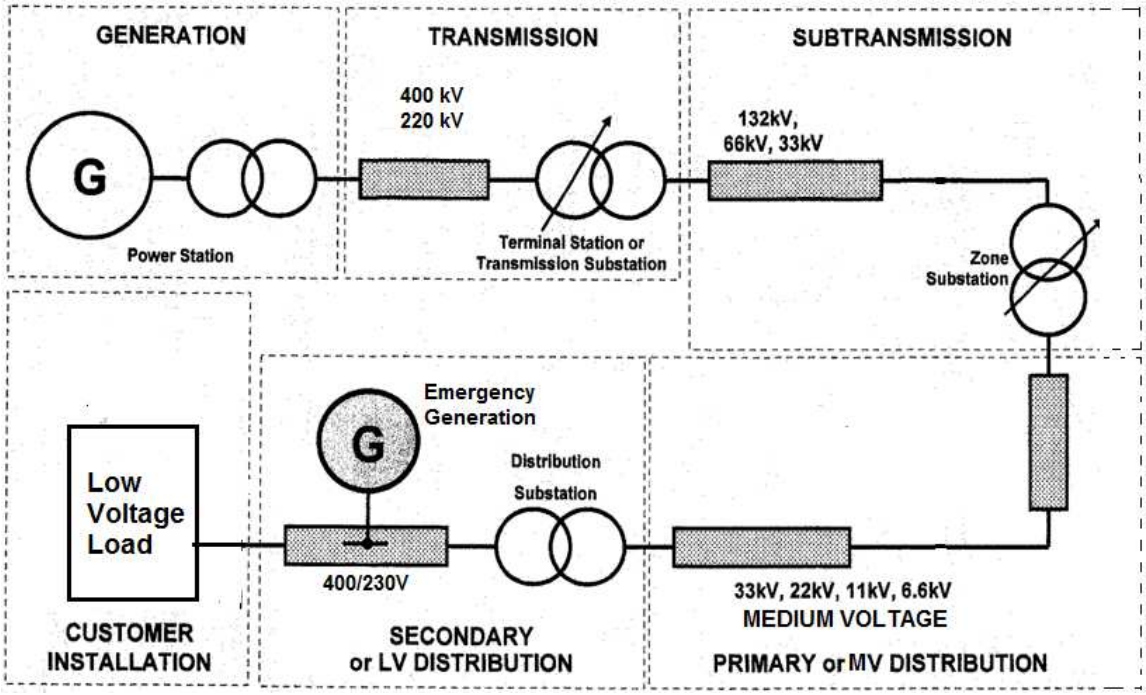

Secondary systems in a Power system

- Protection
- Auto control for voltage, frequency, reactive power compensation, power flow, network configuration and stability
- Metering for billing, operational control and statistical data
- Local manual control (plant status, voltage level reactive power support, network configuration)
- Remote manual control via communications links (SCADA)
- Plant condition monitoring and alarming (temperature, malfunction, maintenance need, operating duty)
- Communications infrastructure
- Instrument transformers - current and voltage transformers

Protection against faults and abnormalities

Types of Faults and Abnormalities

Faults :

The principal electrical system faults are short circuits and overloads.
Short circuits may be caused in many ways, including failure of insulation due to excessive heat or moisture, mechanical damage to electrical distribution equipment, and failure of utilization equipment as a result of overloading or other abuse.
Short circuits may occur between two-phase conductors, between all phases of a poly-phase system, or between one or more phase conductors and ground. The short circuit may be solid (or bolted) or welded, in which case the short circuit is permanent and has relatively low impedance. The main types of faults in a power system are:

- **Short-circuit faults (3Φ, 2Φ, Φ g, 2 Φ g)**
- **Open-circuit faults (open conductor)**
- **Complex faults (inter-circuit, broken conductor, cross-country etc)**
- **Inter-turn faults in windings**

Abnormalities:

- **Real power deficit - underfrequency**
- **Power swings**
- **Overload and excessive operating temperature**
- **Power frequency overvoltage or undervoltage**
- **Underexcitation of synchronous machines**
- **Overfluxing of power transformers**
- **Asynchronous operation of synchronous machines**
- **Overfrequency**
- **Mechanical defects i.e. leaking oil, tap changer mechanism faults .**

Types of Faults

- **Short circuit type faults (solidly earth fault)**

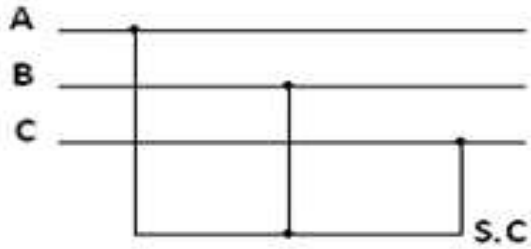

3Φ Symmetrical faults

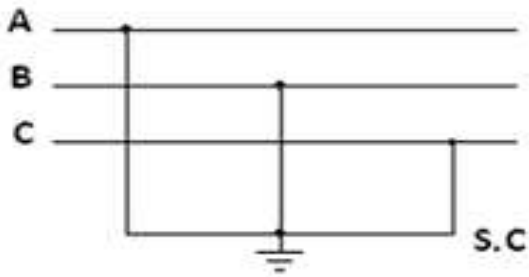

3Φ to ground faults

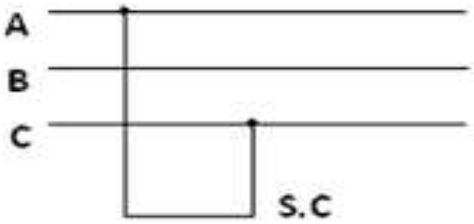

2Φ faults

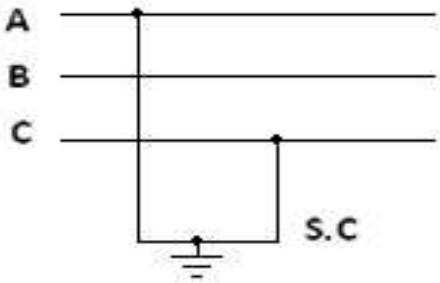

2Φ to ground faults

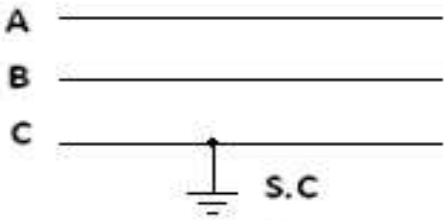

1Φ– ground faults

- **Series (Open-circuit) type faults**

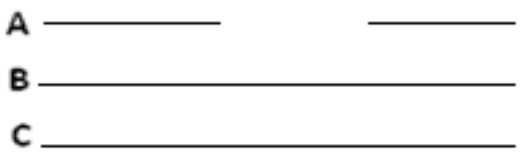

1Φ open

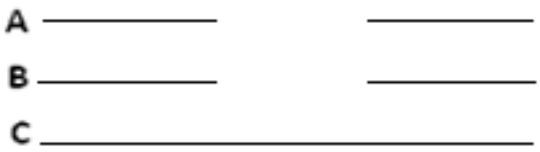

2Φ open

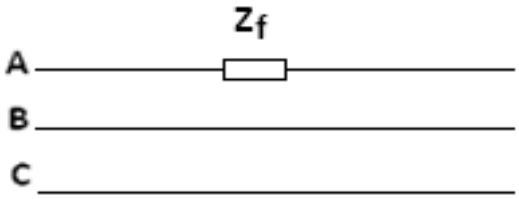

Series impedance in 1Φ

- **Faults in Windings**

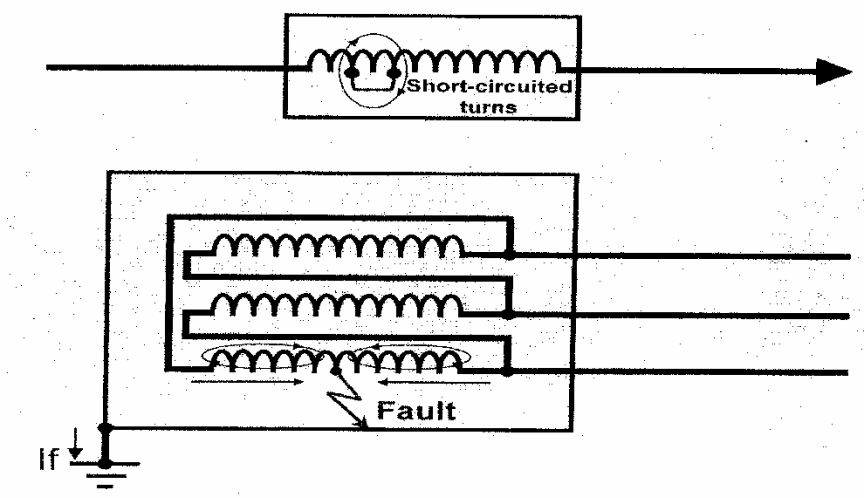

Typical Short-Circuit Type Distribution

- Single-Phase-Ground: 70 – 80 %
- Phase-Phase-Ground: 17 – 10 %
- Phase-Phase: 10 – 8 %
- Three-Phase: 3 – 2 %

Causes of Short-Circuit Faults

- Insulation breakdown due to inherent weakness Lightning
- Birds and animals bridging insulators
- Dig-ups for underground cables
- Poles collapsing
- Conductors breaking
- Vehicle impact
- Wind borne debris
- Incorrect operation by personnel
- Etc

Effects of Short- Circuit Type Faults

■ Large or very large currents can flow through parts of the network - thousands or tens of thousands of Amps can be involved

■ These large currents can only be allowed to flow for a very short time otherwise equipment and generators would be damaged, most likely terminally - allowable short-circuit current flow duration could range from as short as 10 milliseconds up to say 3 seconds.

■ Arcs, sparking and the heating effect of short-circuit currents can start fires involving non-electrical assets / property

■ Very large mechanical forces can be caused by short - circuit currents which have potential to break or damage equipment

■ Electric current can "escape" from the network conductors and flow through paths where they could create a hazard to people or livestock and cause damage to non-electrical assets/property

Performance Requirements of Protection System

- **Discriminate** between load (normal) and fault (abnormal) conditions
- Not be confused by non-damaging transient conditions
- Be **selective** - coordinate with other protection systems
- **Fast** enough to prevent damage and hazards - but not too fast
- Have no **"blind spots"** i.e. unprotected zones
- High degree of **reliability** and **availability**
- Secure against incorrect operation **(security)**
- Should not restrict rating of primary plant and equipment
- Should be **affordable**

Basic Protection Scheme Components

The isolation of faults and abnormalities requires the application of protective equipment that senses when an abnormal current flow exists and then removes the affected portion from the system. The primary protective equipment components are shown in the following figure:

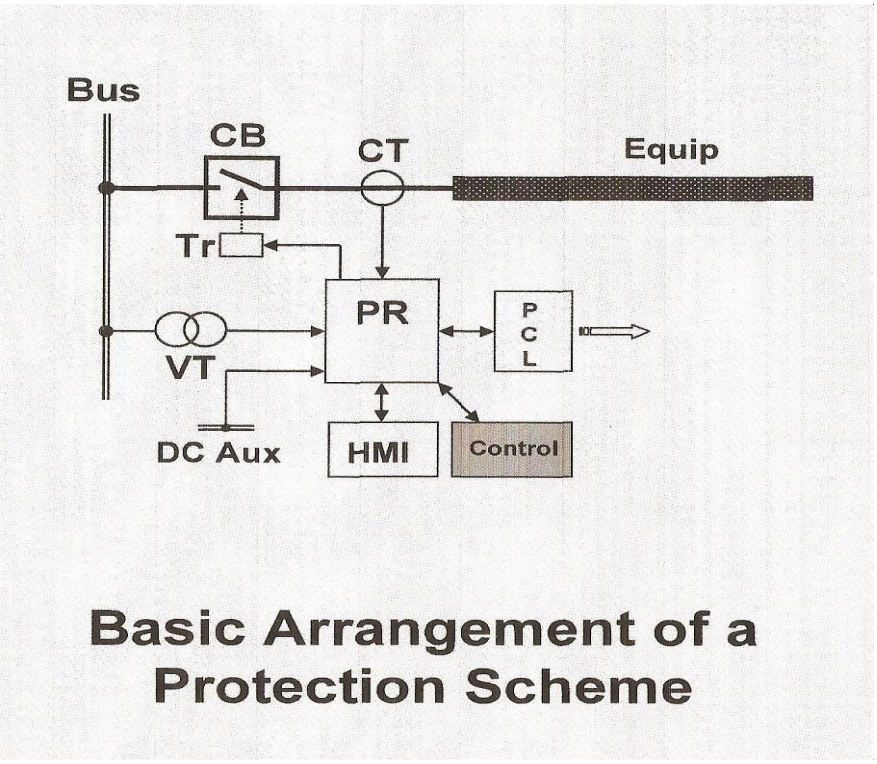

PR	Protection Relay
CB	Circuit Breaker
Equip	Protected Item
CT	Current Transformer
VT	Voltage Transformer
DC Aux	DC Auxiliary supply
HMI	Man-machine interface
PCL	Communications Link
Tr	CB trip coil

The two primary protective equipment components used in the isolation of faults and abnormalities are circuit breakers, and protective relays.

Elements of a Protection System

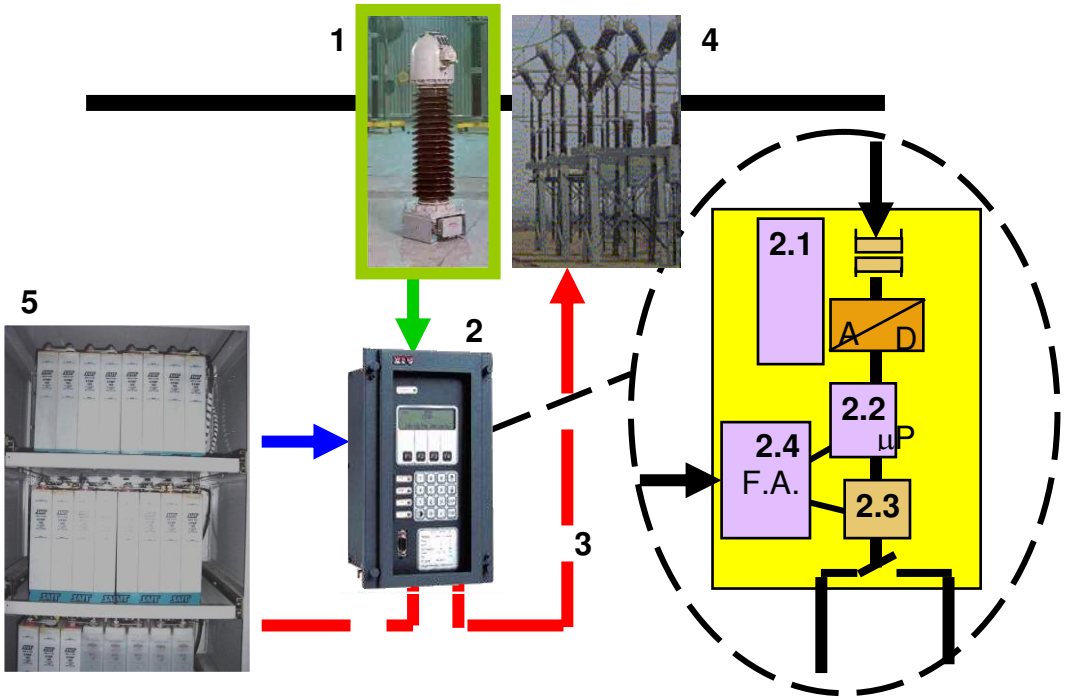

1 – CT or VT , 2- Relay 3- TC 4- CB 5- DC supply

F.A. = Fault Alarm

Elements of a Protection System

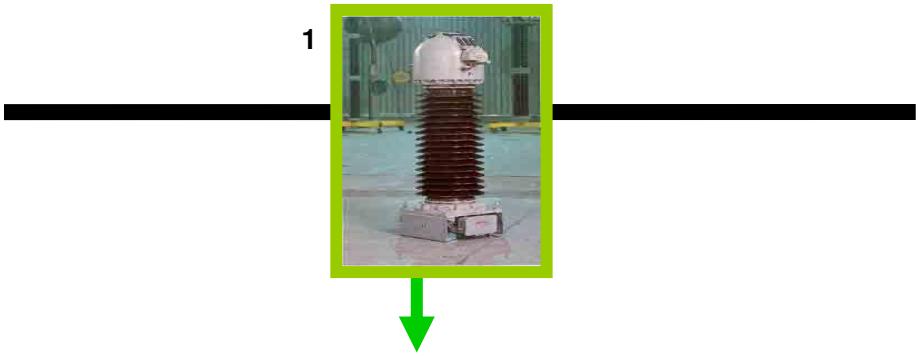

- *The function of transducers (usually CT and VT) is to provide current and voltage signals to the relays, to detect deviations of the parameters watched over.*

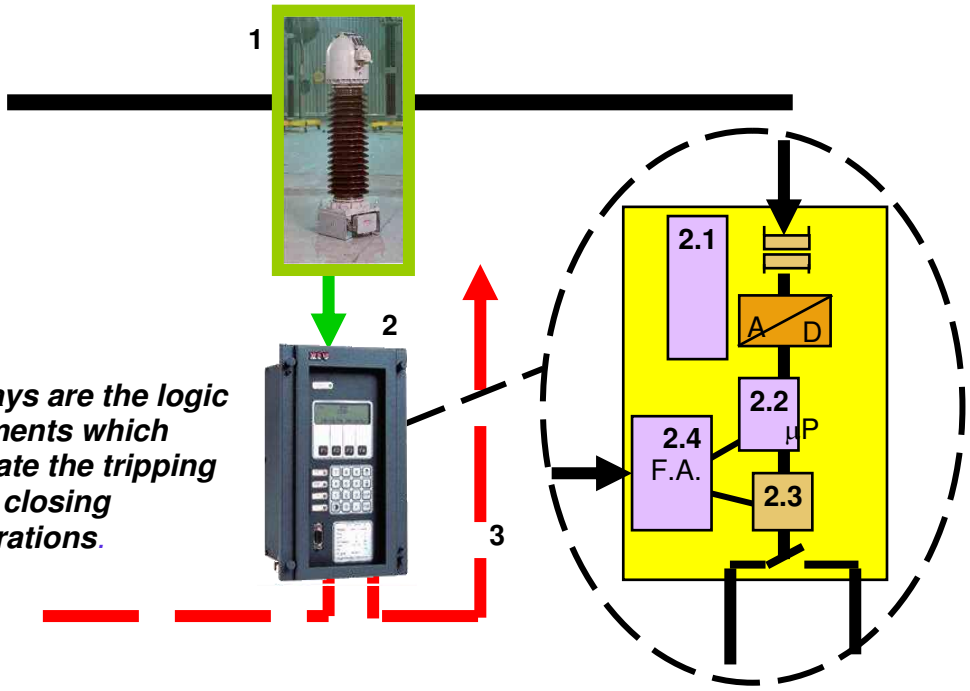

- ***Relays are the logic elements which initiate the tripping and closing operations.***

Elements of a Protection System

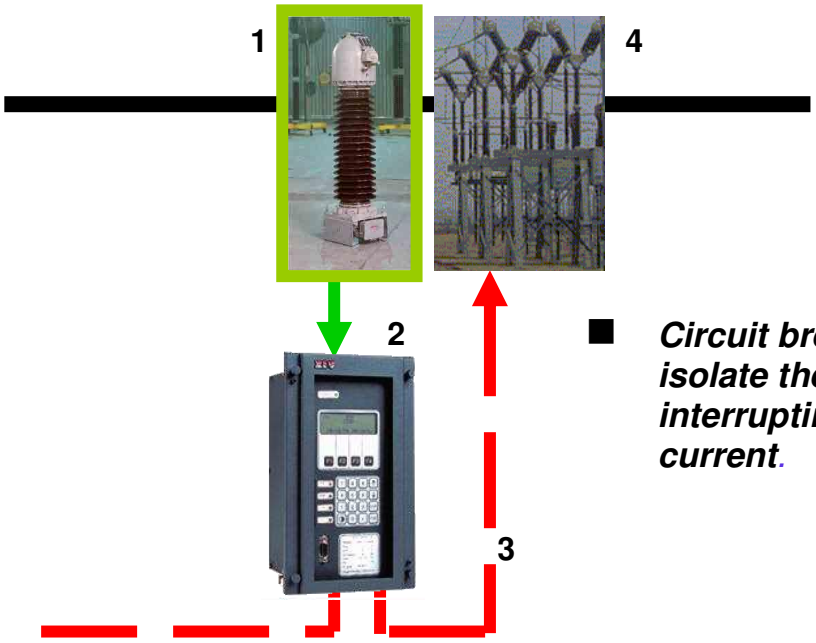

- ***Circuit breakers isolate the fault by interrupting the current.***

- ***Tripping power, as well as power required by the relays, is usually provided by the station battery because is safer than the ac faulted system.***

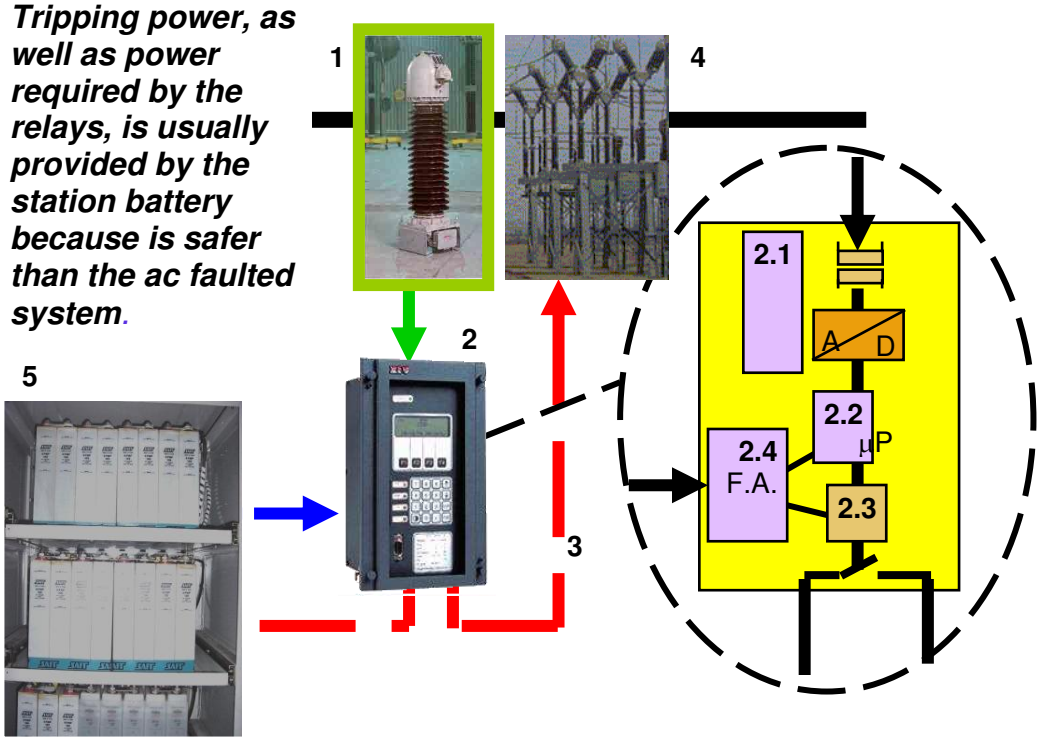

Power System protection	Dr. Mohamad Tawfeeq
Protective Relays	

What is a Relay?

- Device which receives a signal from the power system and determines whether conditions are "normal" or "abnormal" (measuring function)-

- If an abnormal condition is present, relay signals circuit breaker to disconnect equipment that could be damaged (Switching or signaling function)

- "Relays" signal from system to circuit breaker.

What is the Purpose of the Relay?

The purpose of the protective relaying systems is to isolate only the faulty component of power system.

Relaying equipments are classified into two groups:

1. Primary relaying equipment.
2. Back-up relaying equipment.

Primary relaying is - the first line of defense for protecting the equipments.
Back-up protection relaying works only when the primary relaying equipment fails (they are slow in action).

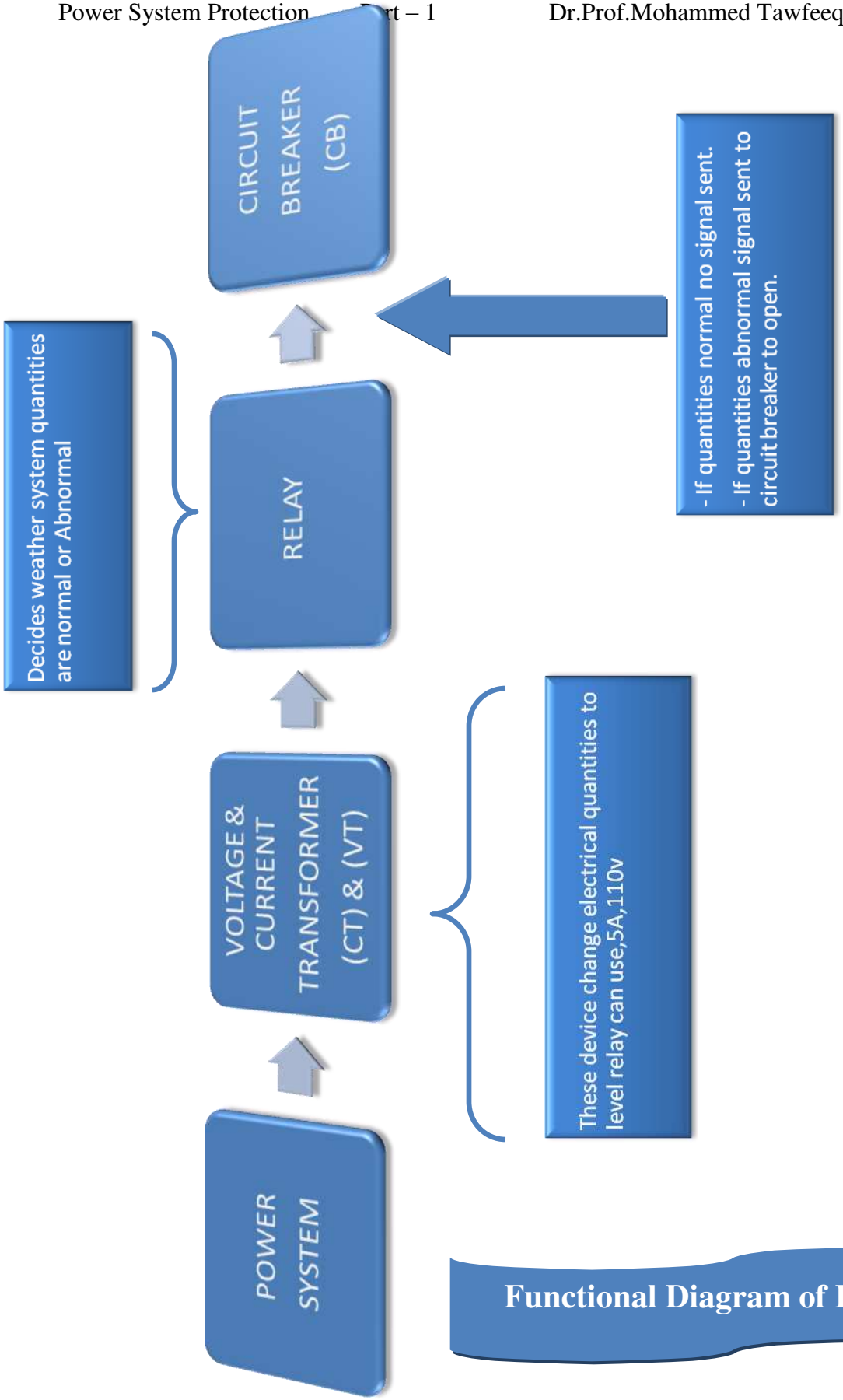

Functional Diagram of Relaying

Desirable Relay Characteristics

- Speed (1/60 sec)
  - * Minimizes damage from current
  - * Maximizes power transfer during normal conditions, stability
- Security
  - * Relay should not cause circuit breaker to open during normal conditions
- Dependability
  - * Relay should cause circuit breaker to open during abnormal conditions
- Sensitivity
  - Ability of a relay to detect all faults for the expected limiting system and fault conditions
- Selectivity
  - Ability of a relay system to discriminate between faults internal and external to its intended protective zones.

Damage is Extensive When Relays Do Not Operate Correctly

Power System protection	Dr. Mohamad Tawfeeq
Classifications of Relays	

Classification of Relays

Protection relays can be classified in accordance with the ***function*** which they carry out, their ***construction***, the ***incoming signal*** and the type of ***protection.***

1. ***General function:***

- Auxiliary.
- Protection.
- Monitoring.
- Control.

2. ***Construction:***

- Electromagnetic.
- Solid state.
- Microprocessor.
- Computerized.
- Nonelectric (thermal, pressure .....etc.).

3. Incoming signal:

- Current.
- Voltage.
- Frequency.
- Temperature.
- Pressure.
- Velocity.
- Others.

4. Type of protection

- **Over current.**
- **Directional over current.**
- **Distance.**
- **Over voltage.**
- **Differential.**
- **Reverse power.**
- **Other.**

Definitions:

■ **Normally open contact (N/O):** is one which is open when the relay is not energized.
■ **Normally closed contact (N/C):** is one which is closed when the relay is not energized.
■ **Operating force or torque:** that which tends to close the contacts of the relay.

■ **Restrain force or torque:** that which opposes the operating force or torque and tend to prevent the closure of the relay contacts.

■ **Pick-up level:** the value of the actuating quantity (current or voltage), which is on the border above which the relay operates.

■ **Drop-out or reset level:** the value of current or voltage below which a relay opens its contacts and comes to original position..

■ **Operating time:** the time which elapses between the instant when the actuating quantity exceeds the pick-up value to the instant when the relay contacts close.

■ **Reset time:** the time which elapses between the instant when the actuating quantity becomes less than the reset value to the instant when the relay contact returns to its normal position.

■ **Primary relays:** the relays which are connected directly in the circuit to be protected.

■ **Secondary relays**: the relays which are connected in the circuit to be protected through CTs and V.Ts.

■ **Auxiliary relays:** relays which operate in response to the opening or closing of its operating circuit to assist another relay in the performance of its function. This relay may be instantaneous or may have a time delay.

■ **Reach:** a distance relay operates whenever the impedance seen by the relay is less than a prescribed value, this impedance or $_r$t]ic corresponding distance is known as the reach of the relay.
■ **Instantaneous relay**: One which has no intentional time-delay and operates in less than 0.1 second.
■ **Blocking:** preventing the protective relay from tripping cither due to its own characteristics or to an additional relay.

■ **Time delay relay :** One which is designed with a delaying means .

Power System protection	Dr. Mohamad Tawfeeq
Types of Relays	

The main types of protective relays are summaries in the following diagram:

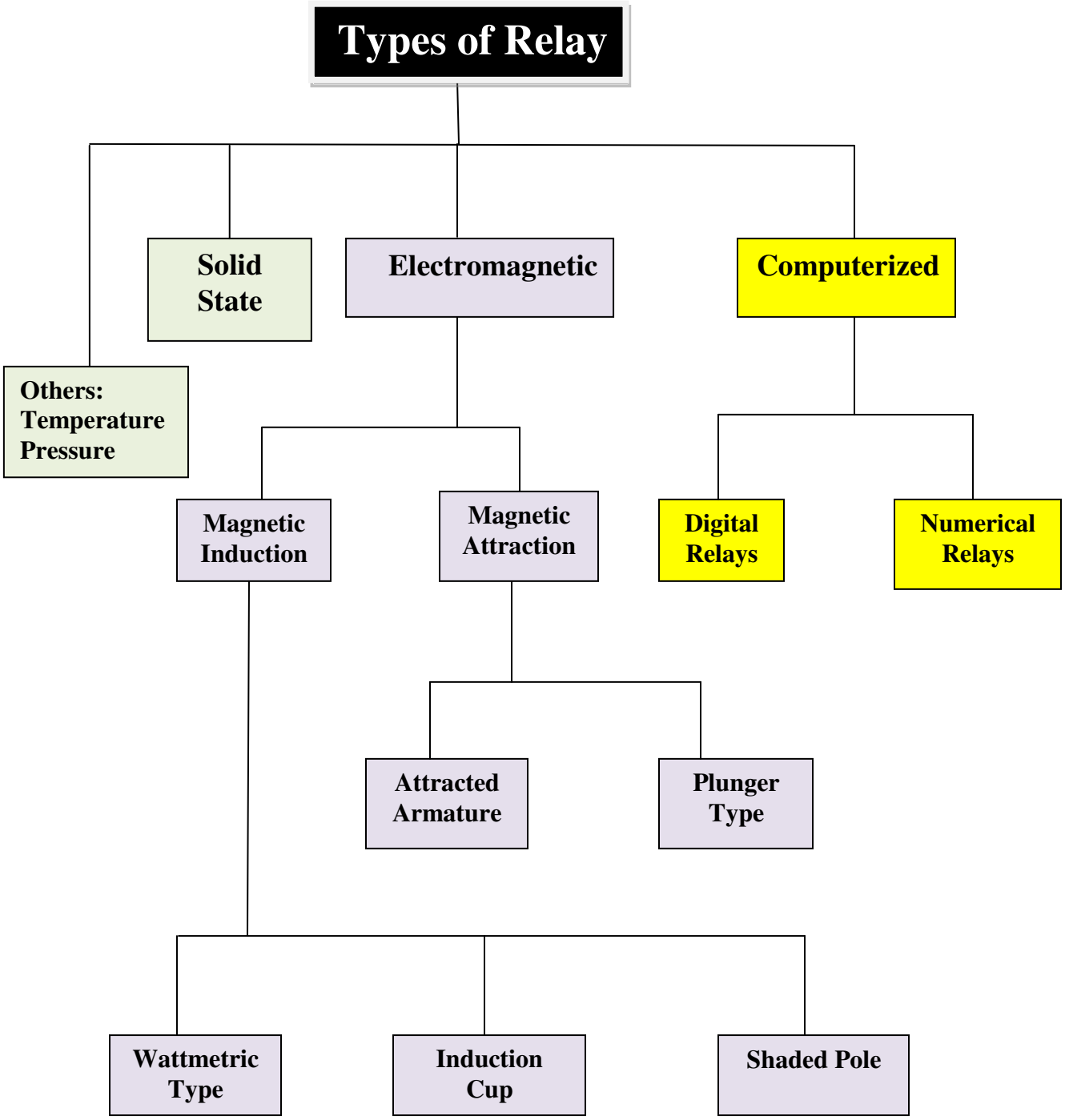

Power System protection	Dr. Mohamad Tawfeeq
Electromagnetic Relays	

1. Electromagnetic relays

Electromechanical Relays

- Research Began at the End of the 19th Century
- The Relay Family Was Completed in the 1930's
- They Are Still in Use

These relays were the earliest forms of relay used for the protection of power systems, and they date back nearly 100 years. They work on the principle of a mechanical force causing operation of a relay contact in response to a stimulus. The mechanical force is generated through current flow in one or more windings on a magnetic core or cores, hence the term electromechanical relay. The principle advantage of such relays is that they provide galvanic isolation between the inputs and outputs in a simple, cheap and reliable form – therefore for simple on/off switching functions where the output contacts have to carry substantial currents, they are still used.
Electromechanical relays can be classified into several different types as follows:

a. magnetic attracted armature relays
b. magnetic induction relays
c. moving coil
d. thermal

However, only attracted armature and induction types have significant application at this time, all other types having been superseded by more modern equivalents. Electromagnetic relays are constructed with electrical, magnetic and mechanical components, have an operating coil and various contacts and are very robust, inexpensive and reliable. However they required maintenance by skilled personnel.

1.1. Magnetic attraction relays

Magnetic attraction relays can be supplied by AC or DC, and operate by the movement of a piece of metal when it is attracted by the magnetic field produced by a coil. There are two main types of relay in this class.

- Attracted armature type (clapper type)
- Plunger type

1.1.1 **The attracted armature relays**: which are shown in Fig.1, consists of a bar or plate of metal which pivots when it is attracted towards the coil.

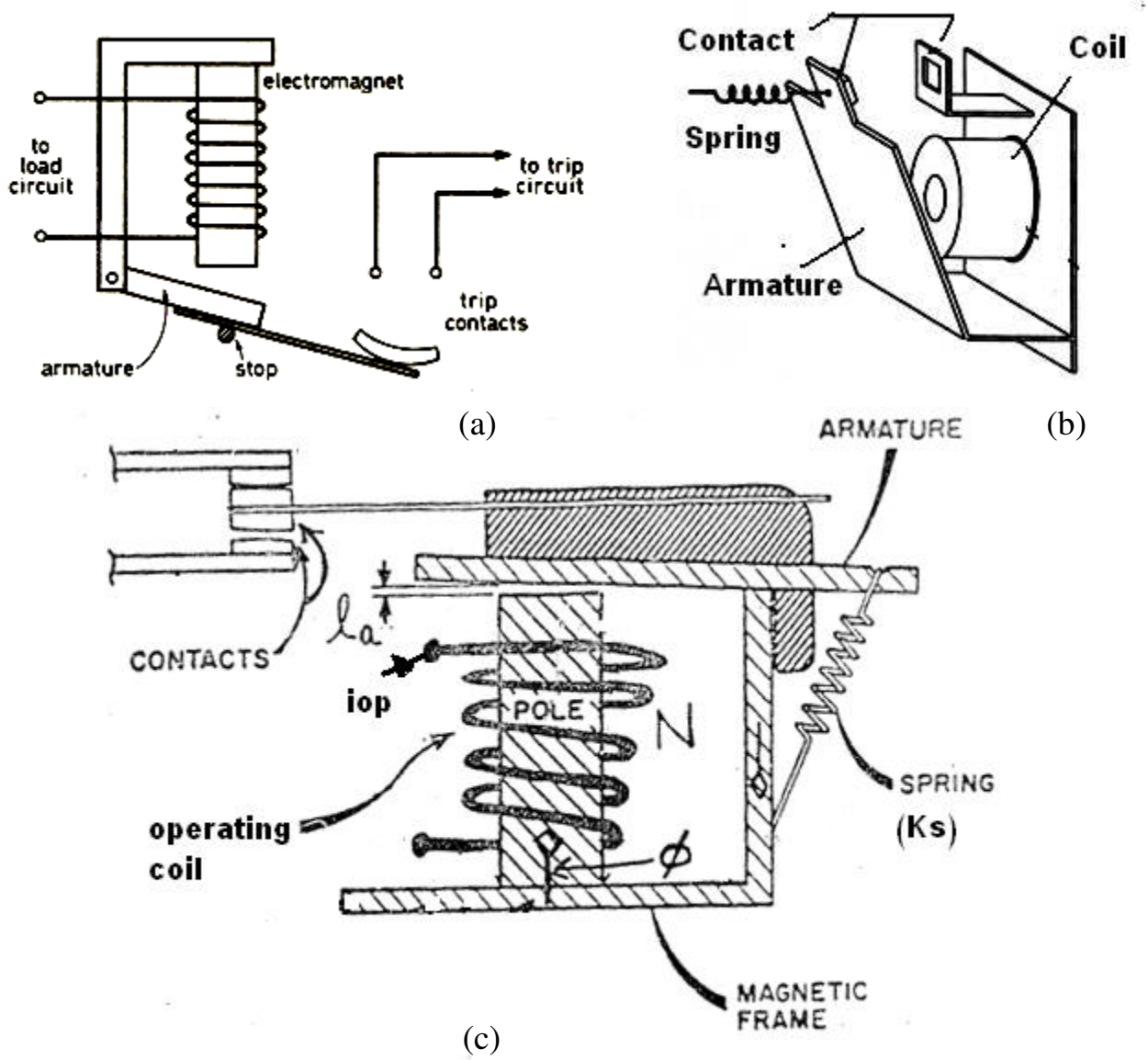

Fig. 1 Attracted armature-type relays

- The armature is attracted to the electromagnet when the current reaches a certain predetermined value (i_{op} – operating current). The force of the armature will trip the link mechanism of the circuit breaker, or it may operate as a relay and close the contacts of a separate tripping circuit. The armature is attracted against gravity or a spring. By adjusting the distance of the armature from the electromagnet, or the tension of the spring, the current at which the trip operates can be varied to suit the circuit conditions.
- The armature carries the moving part of the contact, which is closed or opened according to the design when the armature is attracted to the coil.

1.1.2 **Plunger type relay:** The other type is the piston or solenoid relay, illustrated in Figure 2, in which α bar or piston is attracted axially within the field of the solenoid. In this case, the piston also carries the operating contacts. This called plunger type relay.

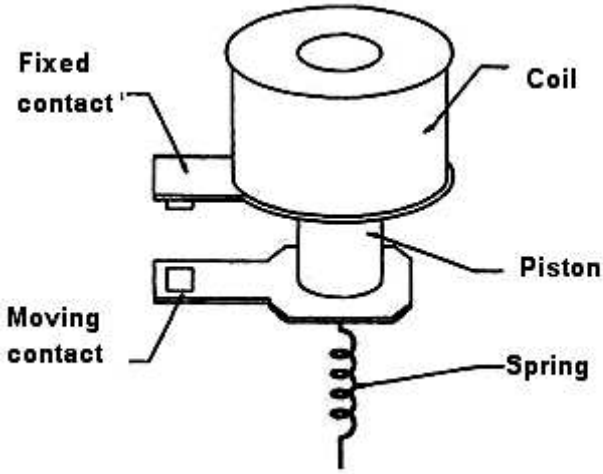

Figure 2 Solenoid-type (plunger) relay

- It can be shown that the force of attraction is equal to K_1I^2 - K_2, where K_1 depends upon the number of turns on the operating solenoid, the air gap, the effective area and the reluctance of the magnetic circuit, among other factors. K2 is the restraining force, usually produced by a spring. When the relay is balanced, the resultant force is zero and therefore $K_1 I^2 =$ K2, so that :

$$I = \sqrt{K_2 / K_1} = \text{constant.}$$

This equation can be proved as follows:

<u>Atracted armature relay analysis</u>

In general, the mechanical force produced by an electric magnet is propotional to φ^2; i.e:

$$F(t) \alpha \varphi^2$$

$$\varphi = \frac{mmf}{R} = \frac{N_i}{R} \quad \text{where}$$

$$R = \frac{l_g}{\mu_o A} \alpha l_g \quad = \text{reluctance}$$

So $\varphi \alpha \frac{Ni}{l_g}$ or $\varphi^2 \alpha \frac{N^2 i^2}{l_g^2}$

Hence $F(t) = k_\varphi \varphi^2$ Where k_φ is constant

$$= k_\varphi \frac{N^2 i^2}{l_g^2} = k_1 i^2 \quad , k_1 = k_\varphi \frac{N^2}{l_g^2}$$

The net force is

$$F_n(t) = F(t) - k_2 = k_1 i^2 - k_2$$

Where $k_2 =$ restraining force produced by the spring

When the relay is balanced $F_n(t) = 0$

$$O = k_1 I^2 - k_2$$

So $k_1 I^2 = k_2$

or $I = \sqrt{\frac{k_2}{k_1}} =$ constant

I = RMS value of i

- In order to control the value at which the relay starts to operate, the restraining tension of the spring or the resistance of the solenoid circuit can be varied, thus modifying the restricting force. *Attraction relays effectively have no time delay and, for that reason, are widely used when instantaneous operations are required.*

Example :
An electromagnetic relay of attracted armature type has constants $k_1 = 0.6$ and $k_2 = 10$ find whether the relay will operate or not when:

(a) A current of 4A flows through the relay winding.

(b) A current of 5A flows through the relay winding.

(c) Find the minimum current required to operate the relay.

Solution:

(a) For 4A current:

$$F_n(t) = k_1 I^2 - k_2 = 0.6(4)^2 - 10 = -0.4N$$

So the relay will not operate. Since, the restrain force > operating force.

(b) For 5A current:

$$F_n(t) = k_1 I^2 - k_2 = 0.6(5)^2 - 10 = 15 - 10 = 5N$$

Hence, the relay will operate, since, the operating force > restrain force

(c) The minimum current required to operate the relay is when the relay becomes at balanced condition, i.e $F_n(t) = 0$

or $$I = \sqrt{\frac{k_2}{k_1}} = \sqrt{\frac{10}{0.6}} = 4.08A$$

1.2. Magnetic induction relays

An induction relay works only with alternating current. Induction relays can be grouped into three classes as set out below.

1.2.1. Wattmetric-type relay

It consists of an electromagnetic system consists of two electromagnets constructed as shown in Fig.4, which operates on a moving conductor, in the form of a disc.

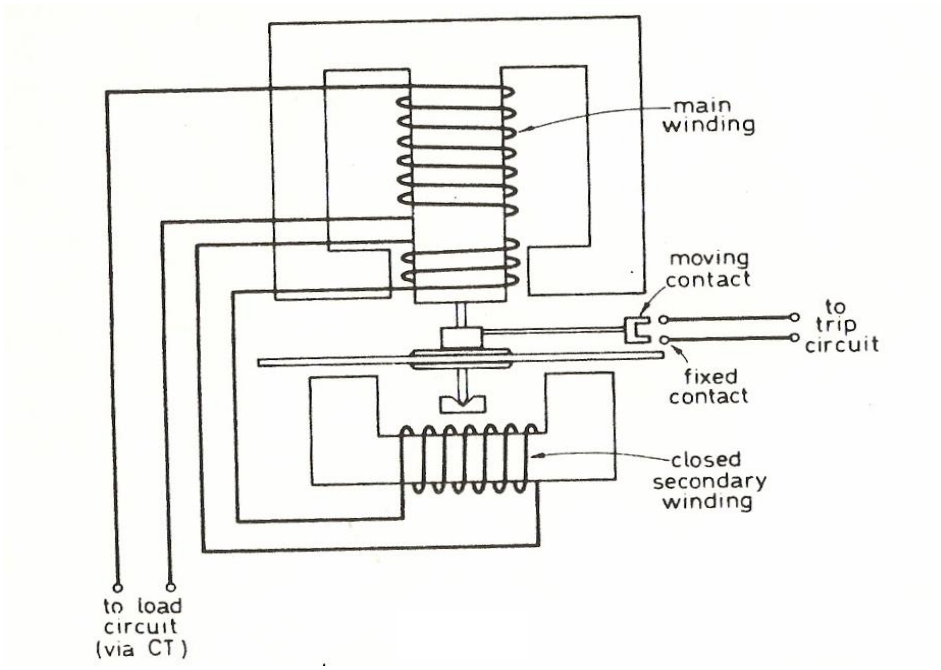

Fig.4. Induction type overload relay

Electromagnetic Induction Principle

- Induction type relay: General operating principle:

The two magnets of the induction type relay produce two alternating magnetic fields φ_1 & φ_2 :

$$\varphi_1 = \varphi_{1m} \sin \omega t$$
$$\varphi_2 = \varphi_{2m} \sin(\omega t + \theta)$$

where φ_2 leads φ_1 by an angle θ.

φ_1 & φ_2 produce eddy currents in the rotating disc which are $i_{\varphi 1}$ and $i_{\varphi 2}$

$$i_{\varphi 1} \alpha \frac{d\varphi_1}{d_t}$$
$$i_{\varphi 2} \alpha \frac{d\varphi_2}{dt}$$

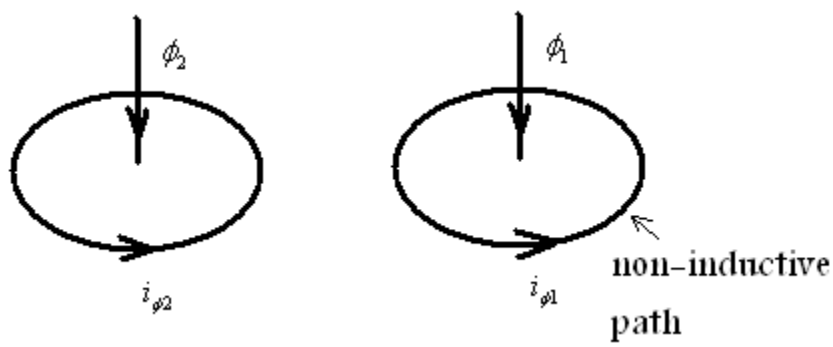

or

$$i_{\varphi 1} \alpha \varphi_{1m} \cos \omega t$$
$$i_{\varphi 2} \alpha \varphi_{2m} \cos(\omega t + \theta)$$

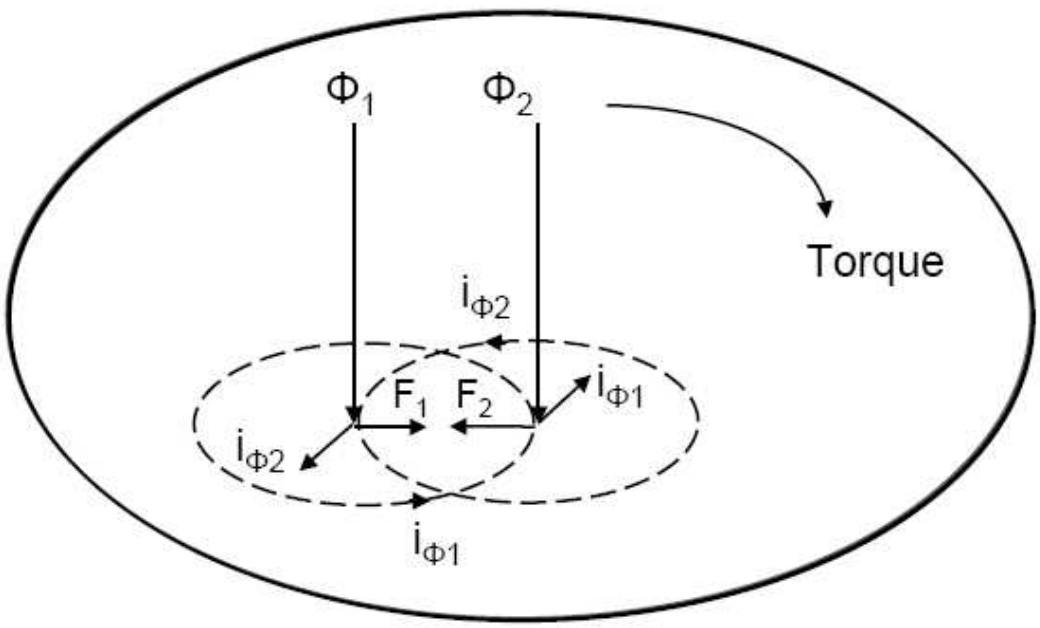

F_1 is the force produced by intersection of φ_1 and $i_{\varphi 2}$.

F_2 is the force produced by intersection of φ_2 and $i_{\varphi 1}$.

The net force is

$$F = F_2 - F_1 \alpha [\varphi_2 i_{\varphi 1} - \varphi_1 i_{\varphi 2}]$$

Thus $F \alpha \varphi_{1m} \varphi_{2m} [\sin(\omega t + \theta) \cos \omega t - \sin \omega t \cos(\omega t + \theta)]$

Now $\sin(\omega t + \theta) \cos \omega t = \sin \omega t \cos \omega t \cos \theta + \sin \theta \cos^2 \omega t$

$$-\sin \omega t \cos(\omega t + \theta) = \underline{-\sin \omega t \cos \omega t \cos \theta + \sin^2 \omega t \sin \theta}$$

$$= \sin \theta (\cos^2 \omega t + \sin^2 \omega t) = \sin \theta$$

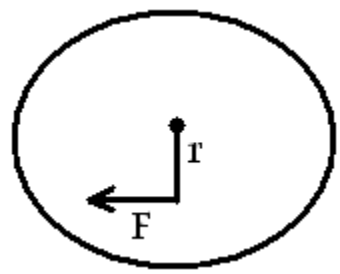

Hence $F \alpha \varphi_{1m} \varphi_{2m} \sin \theta$

The net torque produced

$$T = Fr \alpha F$$

or

$$T = K_1 \varphi_{1m} \varphi_{2m} \sin \theta$$

Let Φ_1 is the R.M.S value of φ_1, Φ_2 is the R.M.S value of φ_2

So

$$F \alpha \Phi_1 \Phi_2 \sin \theta$$

or

$$T \alpha \Phi_1 \Phi_2 \sin \theta$$

In terms of currents:

$$T \alpha I_1 I_2 \sin \theta$$

or

$$T = K_t I_1 I_2 \sin \theta$$

- **Induction Type Relay with plug settings**

Fig.6 Induction type relay with

Plug settings

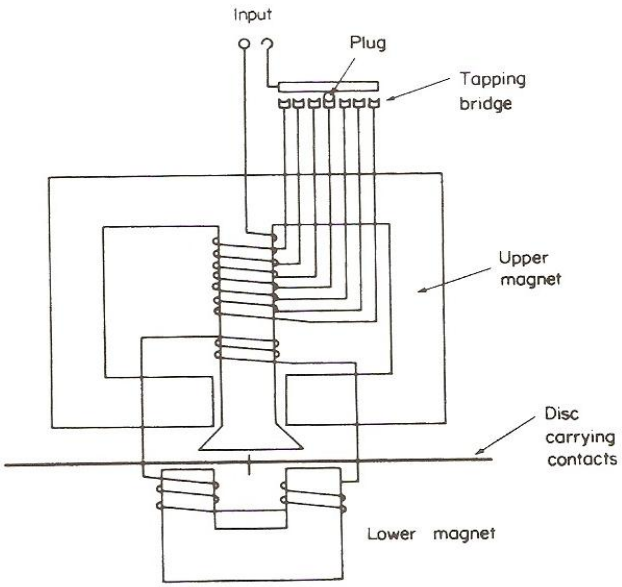

1.2.2. Induction-Cup relay

The operation is similar to the induction disc; here, two fluxes at right angles induce eddy currents in a bell-shaped cup which rotates and carries the moving contacts. A four-pole relay is shown in Figure 7.

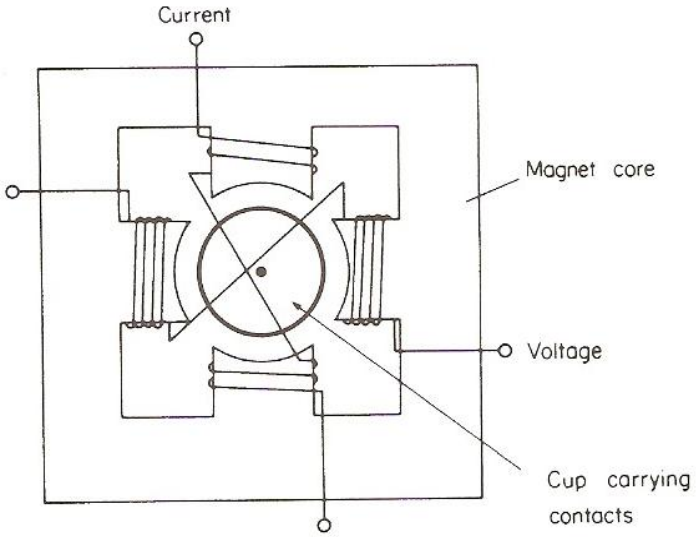

Fig 7.Four-pole induction-cup relay.

1.2.3. Shaded-pole relay

In this case operation of the electromagnetic section is short-circuited by means of a copper ring or coil. This creates a flux in the area influenced by the short circuited section (the so-called shaded section) which lags the flux in the nonshaded section, see Figure 8.

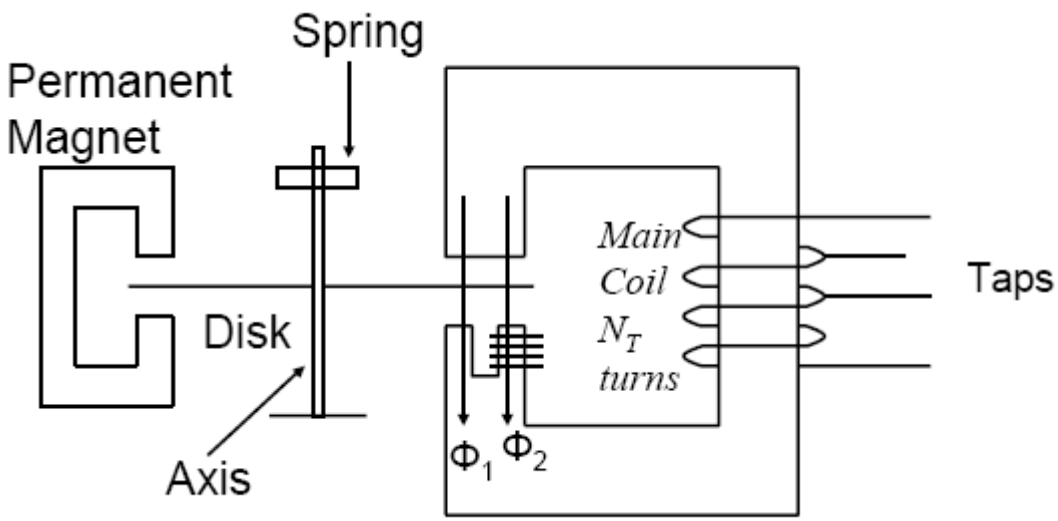

Fig.8 Shaded – pole Relay

- **Note that the main coils has TAPS, this means that the number of turns is actually adjustable.**

In the electromagnetic induction principle, the relay element has a non-magnetic rotor (an aluminum or copper disc or cylinder) in which coils create magnetic fluxes that induce circulating currents. The interaction between the fluxes and the circulating currents generates torque. This is the operation principle of induction motors.

If the current is sinusoidal and the iron core is assumed to have a linear behavior, the magnetic field and the magnetic flux in the iron core are sinusoidal too. Note that the flux is divided in two parts. One flows through the normal ('pole") and the other flows through the shaded pole. These two fluxes are similar in magnitude but different in angle.

Features of the Induction Principle

- Suitable for AC Systems
- The Torque Does Not Vary With Time: No Vibration
- Inherent Rejection of DC Offset: Low Overreach

Power System protection	Dr. Mohamad Tawfeeq
Solid State Relays	

2. Solid State Relays

- Research Began in the 1940's
- First Commercial Products in the Late 1950's
- Full Development in the 1960's
- Advantages Over Electromechanical Relays

A **solid state relay (SSR)** is a solid state electronic component that provides a similar function to an electromechanical relay but does not have any moving components, increasing long-term reliability. Introduction of static relays began in the early 1960's. Their design is based on the use of analogue electronic devices instead of coils and magnets to create the relay characteristic. Early versions used discrete devices such as transistors and diodes in conjunction with resistors, capacitors, inductors, etc., but advances in electronics enabled the use of linear and digital integrated circuits in later versions for signal processing and implementation of logic functions.. Figure 9 shows a small overcurrent relay and the circuit board for a simple static relay.

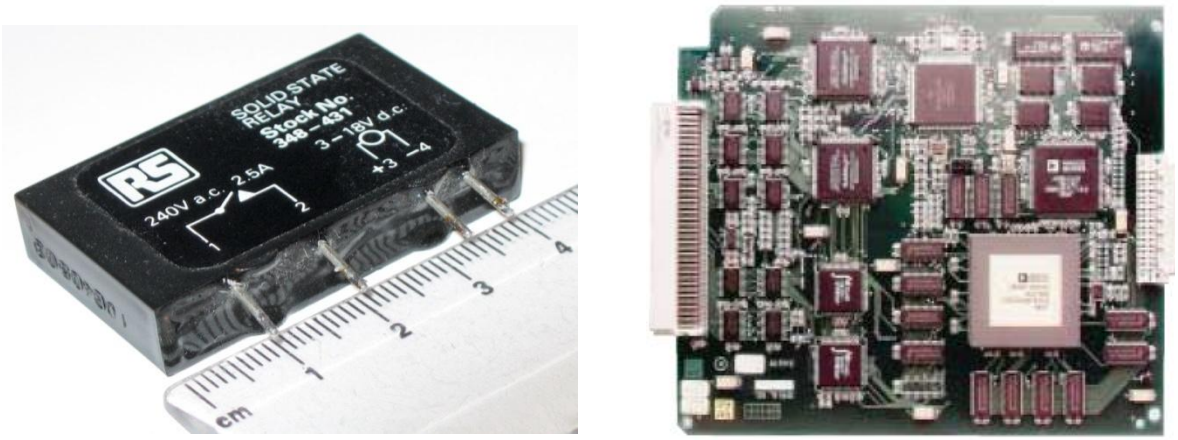

Fig.9 . Small overcurrent relay and the circuit board for a simple static relay.

Solid State Relay Principle of Operation

Solid state relays (static relays) are extremely fast in their operation. They have no moving parts and have very quick response time and they are very reliable.
Figure 1 shows the elements used in a single – phase time lag overcurrent relay.

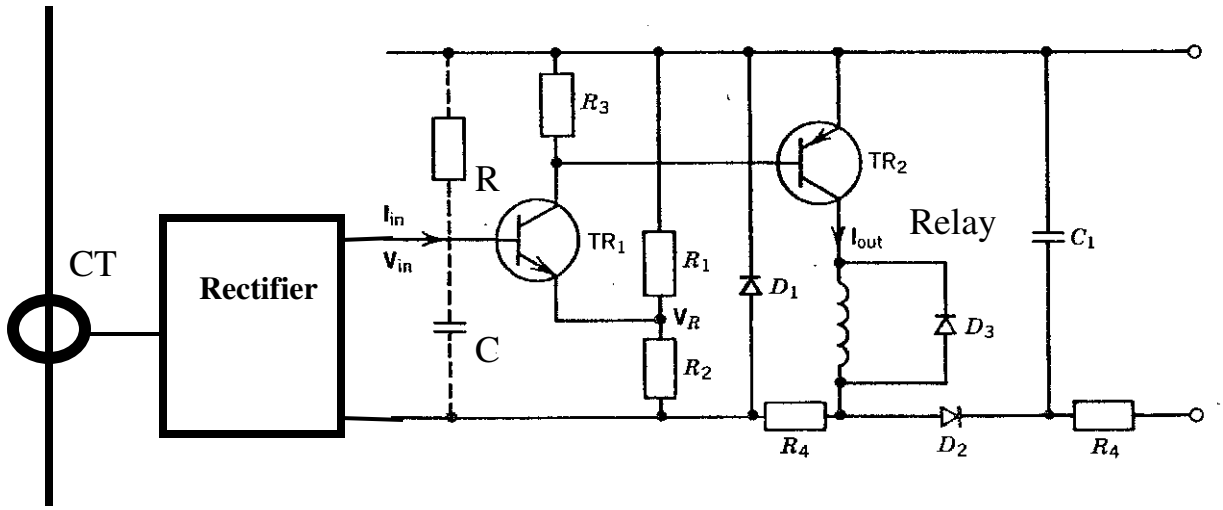

Fig.1

- The AC input from the current transformer CT is rectified and converted to DC voltage V_{in} through shunt resistance.
- A delay time circuit (RC) is used to produce the required time delay.
- If $V_{in} < V_R$, the base – emitter of transistor TR_1 is reversed bias forcing the transistor to be in the cut off state.
- When $V_{in} > V_R$, transistor TR_1 will be in the ON state and in turn will turn on TR_2 and the output relay is activated.
- V_R is set by R_1 and R_2.

Power System protection	Dr. Mohamad Tawfeeq
Computerized Relays	

3. Computerized Relay

3.1. Digital relays

- **Research Began in the 1960's**
- **Basic Developments: Early 1970's**
- **A Technical and Economic Solution: the Microprocessor**
- **Commercial Relays: Early 1980**

A **digital protective relay** is a microcomputer controlled relay. The data acquisition system collects the transducers information and converts it to the proper form for use by the microcomputer. Information from CT and PT and other systems is amplified and sampled at several kHz. The sampled signals are digitized with A/D converter and fed to registers in microprocessor system. The microprocessor may use some kind of counting technique, or use the Discrete Fourier Transform (DFT) to compare the information with preset limits for overcurrent , over/under voltage…etc, and then send command through D/A converter to alarm or trip signals to the circuit breakers.

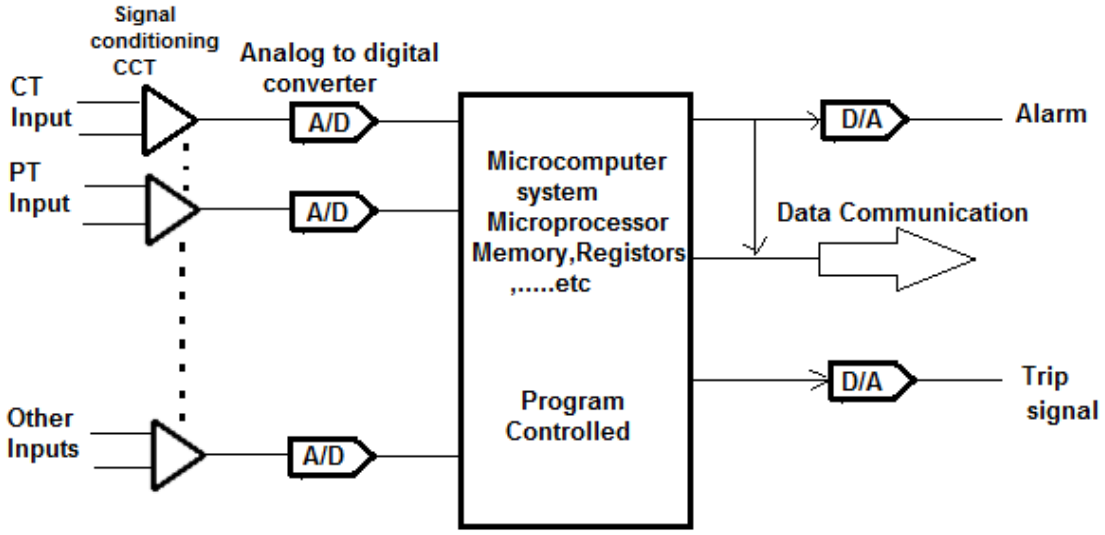

Microcomputer - controlled relay

Operation :

- The relay applies A/D (analog/digital) conversion processes to the incoming the voltages and currents.
- The relay analyzes the A/D converter output to extract the magnitude of the incoming quantity (RMS value) using Fourier transform concept. Further, the Fourier transform is commonly used to extract the signal's phase angle relative to some reference.
- The digital relay is capable of analyzing whether the relay should trip or restrain from tripping based on current and/or voltage magnitude (and angle in some applications).

Examples of digital relays are shown in Figure 10.

Fig.10 Digital relays

Signal Path for Microprocessor Relays

The signal path for voltage and current input signals are shown in Fig.11.

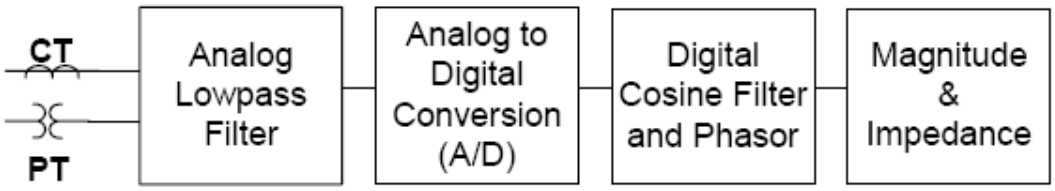

Fig.11

- After the currents and voltages are reduced to acceptable levels by the instrument transformers, the signals are filtered with an analog filter
- The signal then digitized and re-filtered with a digital filter.
- Numerical operating quantities are then calculated from the processed waveforms.

Digital Relay Construction

- Analog Input Subsystem
- Discrete Input Subsystem
- A/D Converter
- Microprocessor
- Discrete output Subsystem
- Operating signaling and communication subsystems

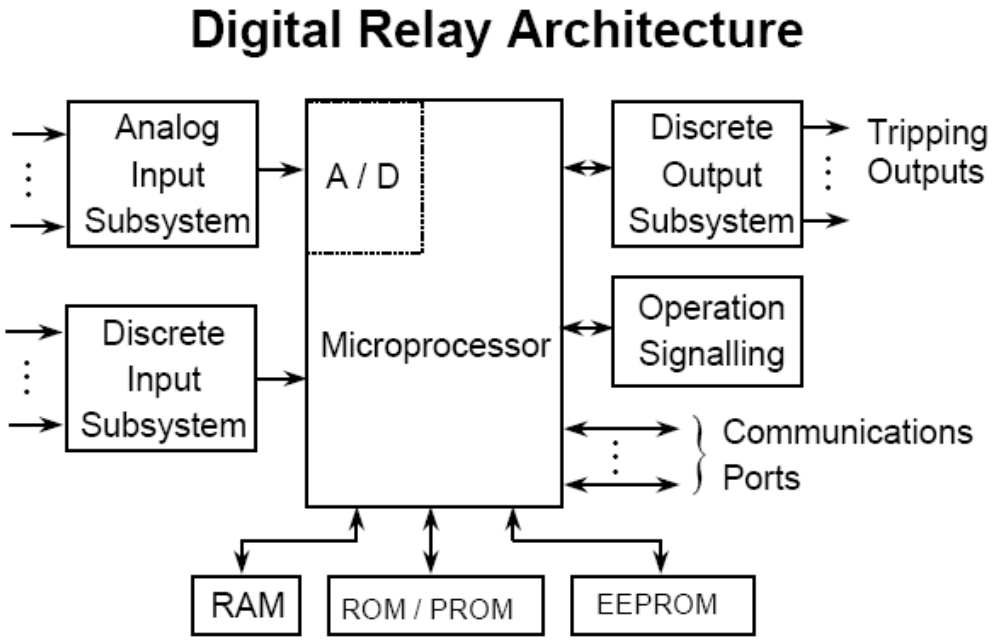

Fig.12

Analog Input System

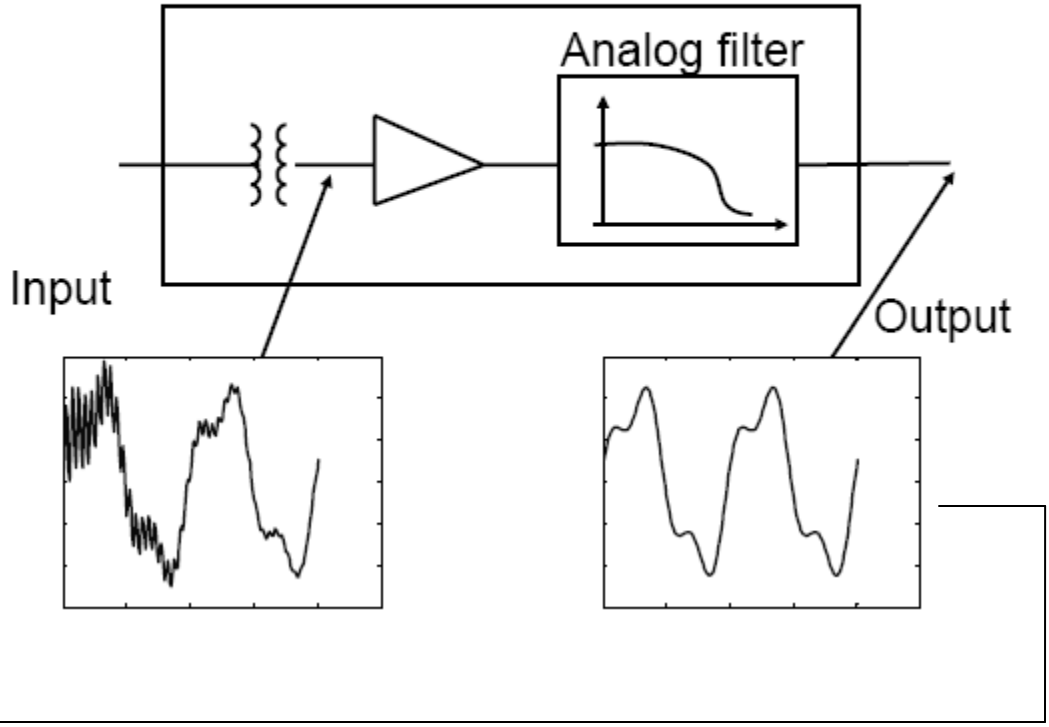

Sampling of Analog Signals

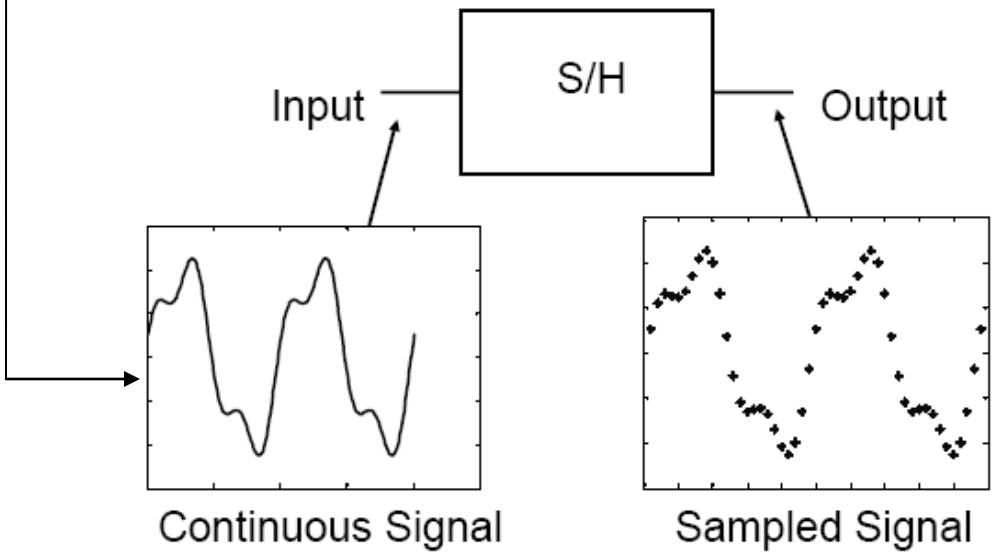

Sampled Signal

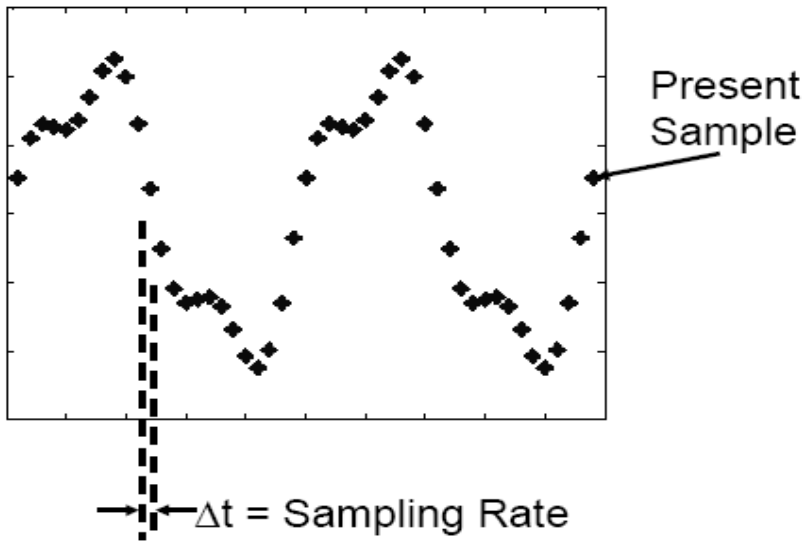

Sampling frequency is the inverse of sampling rate.

Analog to Digital (A/D) Conversion

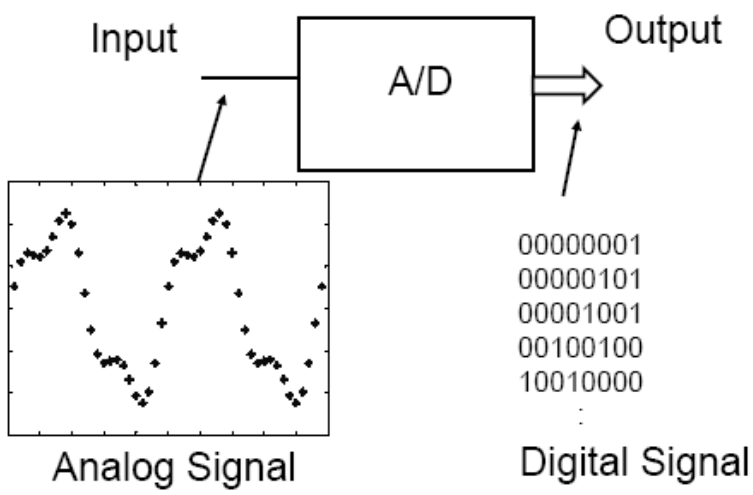

Sampling and Hold system

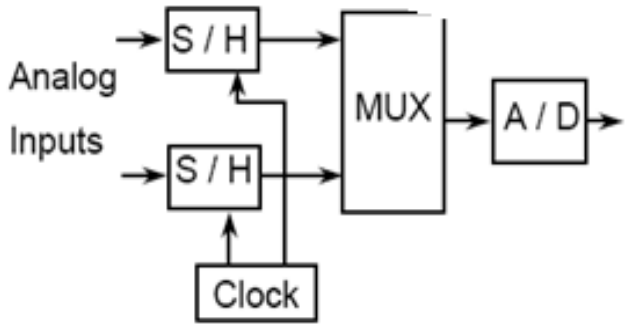

Digital Filtering

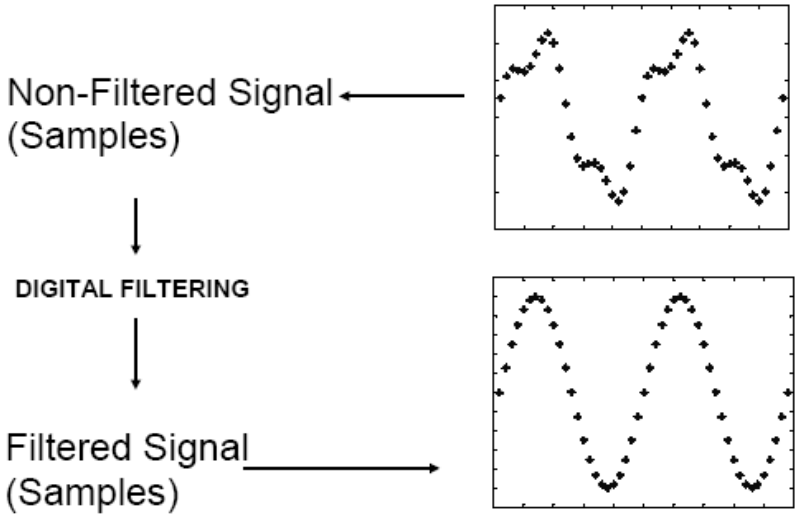

The digital filter smoothes the signal by eliminating DC and frequencies components those are different than the fundamental (when required).

Phasor Calculation

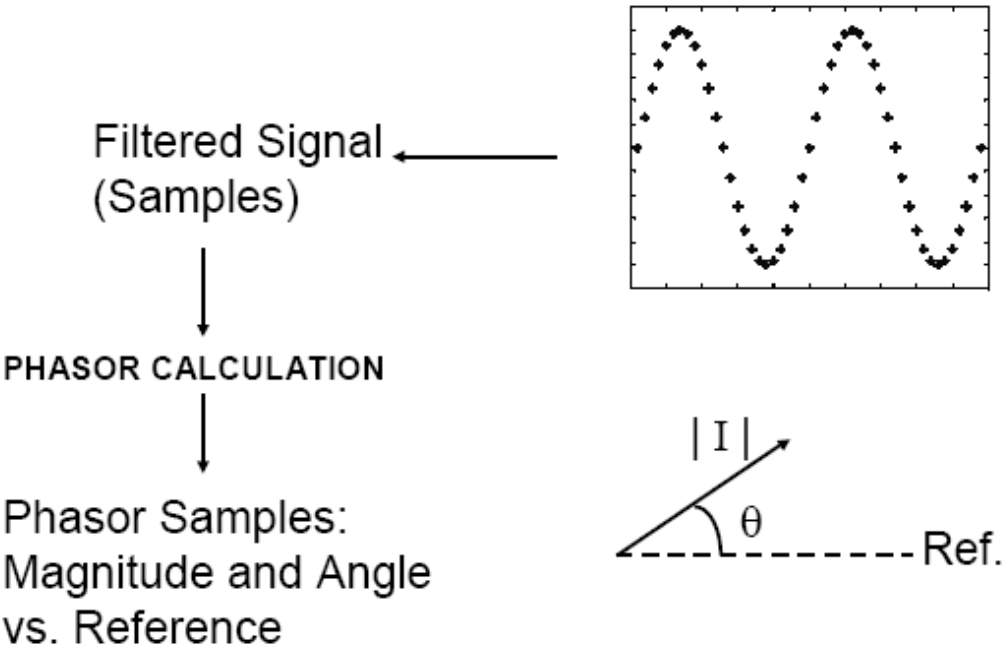

Digital Relay Algorithm

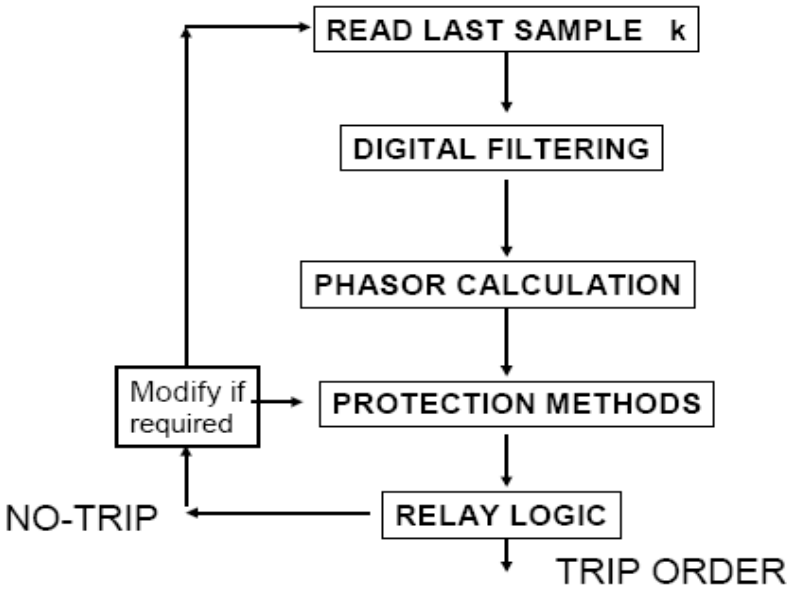

Protection Methods

- Overcurrent (50, 51)
- Voltage (59, 27)
- Directional (67)
- Distance (21)
- Differential (87)
- Frequency (81)

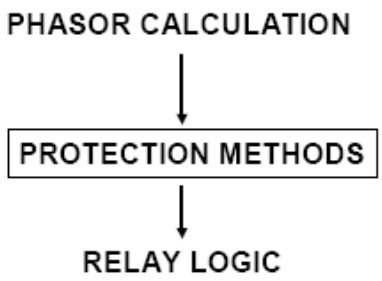

These routines implement the protection function: overcurrent, directional, distance,differential, etc.

Other Features :

- The relay has some form of advanced event recording. The event recording would include some means for the user to see the timing of key logic decisions, relay I/O (input/output) changes, and see in an oscillographic fashion at least the fundamental frequency component of the incoming AC waveform.
- The relay has an extensive collection of settings, beyond what can be entered via front panel knobs and dials, and these settings are transferred to the relay via an interface with a PC (personal computer), and this same PC interface is used to collect event reports from the relay.
- The more modern versions of the digital relay will contain advanced metering and communication protocol ports, allowing the relay to become a focal point in a SCADA system.

Advantages of Digital Relays

- Low Cost
- Multifunctionality
- Protection and control
- Measurement
- Fault recording
- Communications capability
- Compatibility with Digital Integrated Systems
- High Reliability
- Relays (integration, self-testing)
- Protection system (supervised by the relays)
- Sensitivity and Selectivity
- New Protection Principles
- New Relay Operating Characteristics
- Maintenance-Free
- Reduced Burden on CTs and VTs
- Adaptive Protection

Power System protection	Dr. Mohamad Tawfeeq
Numerical Relays	

3.2. NUMERICAL RELAYS

The distinction between digital and numerical relay rests on points of fine technical detail, and is rarely found in areas other than Protection. They can be viewed as natural developments of digital relays as a result of advances in technology. Typically, they use a specialized digital signal processor (DSP) as the computational hardware, together with the associated software tools.

Numerical measurement treatment

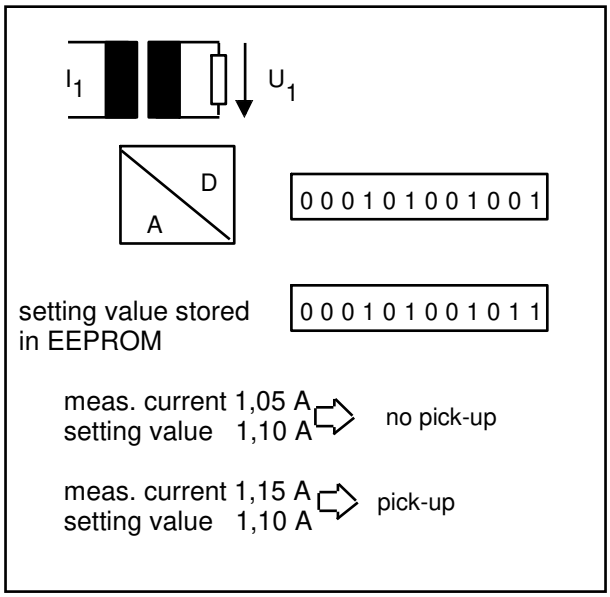

numerically the measurement value is converted into a logical digit and then compared with another digit stored in a memory

Mode of operation

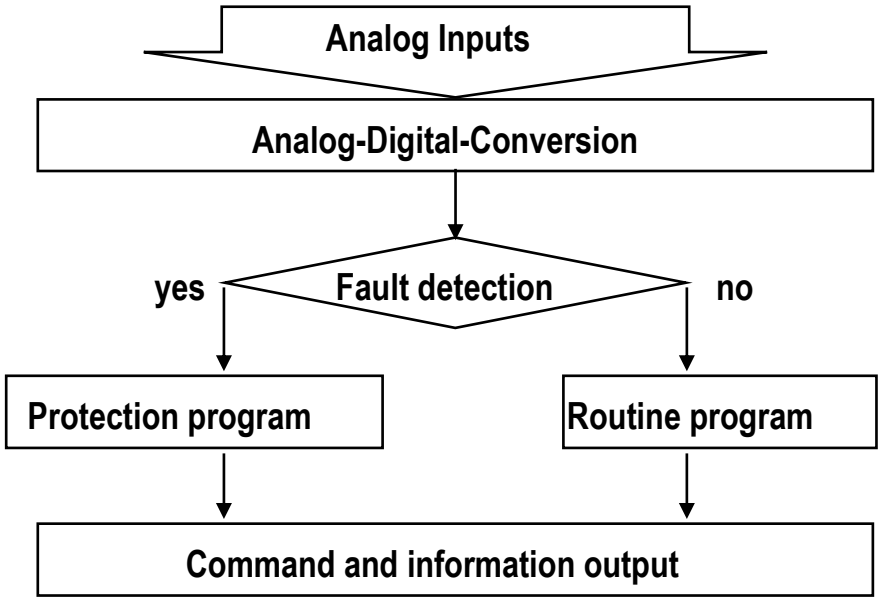

Advantages of numerical technology

- **Comprehensive information supply**
- **clear representation of the fault sequence**

Fault sequence of event and disturbance recording indicate

- ❑ **What actually happened ?**
- ❑ **What did the current and voltage signals look like (CT saturation) ?**
- ❑ **When did the protection issue a trip signal ?**
- ❑ **How long did the circuit breaker need to operate ?**
- ❑ **What was the magnitude of the interrupted current ?**
- ❑ **How did the system behave after the circuit breaker tripped ?**

Electromagnetic vs Computerized

Comparison between Electromagnetic Relay and Computerized Relay

Characteristic	Electromagnetic Relay	Computerized Relay	
		Digital Relay	Numerical Relay
Relay Size	Bulky	Small	Compact
Speed of Response	Slow	Fast	Very fast
Timing function	Mechanical clock works, dashpot	Counter	Counter
Time of Accuracy	Temp. dependent	Stable	Stable
Reliability	High	High	High
Vibration Proof	No	Yes	Yes
Characteristics	Limited	Wide	Wide
CT Burden	High 8 to 10 VA	Low < 0.5 VA	Low < 0.5 VA
Reset Time	Very High	Less	Less
Auxiliary supply	Required	Required	Required
Range of settings	Limited	Wide	Wide
Function	Single function	Multi-function	Single function
Maintenance	Frequent	Low	Very Low
Resistance	100 milli ohms	10 Ohms	10 Ohms
Deterioration due to Operation	Yes	No	No
Relay Programming	No	Programmable	Programmable
SCADA Compatibility	No	Possible	Yes
Fault Recording	Not possible	Possible	Possible
Visual indication	Flags, targets	LEDs, LCD	LEDs, LCD
Self-monitoring	No	Yes	Yes

ANSI Device Numbers

The **ANSI Standard Device Numbers** denote what features a protective device supports (such as a relay or circuit breaker). These types of devices protect electrical systems and components from damage when an unwanted event occurs, such as a electrical fault.

List of Device Numbers

- 1 - Master Element
- 2 - Time Delay Starting or Closing Relay
- 3 - Checking or Interlocking Relay
- 4 - Master Contactor
- 5 - Stopping Device
- 6 - Starting Circuit Breaker
- 7 - Anode Circuit Breaker
- 8 - Control Power Disconnecting Device
- 9 - Reversing Device
- 10 - Unit Sequence Switch
- 12 - Overspeed Device
- 13 - Synchronous-speed Device
- 14 - Underspeed Device
- 15 - Speed - or Frequency-Matching Device
- 20 - Elect. operated valve (solenoid valve)
- 21 - Distance Relay
- 23 - Temperature Control Device
- 25 - Synchronizing or Synchronism-Check Device
- 26 - Apparatus Thermal Device
- 27 - Undervoltage Relay
- 29 - Isolating Contactor
- 30 - Annunciator Relay
- 32 - Directional Power Relay
- 36 - Polarity or Polarizing Voltage Devices
- 37 - Undercurrent or Underpower Relay
- 38 - Bearing Protective Device
- 39 - Mechanical Conduction Monitor
- 40 - Field Relay
- 41 - Field Circuit Breaker
- 42 - Running Circuit Breaker
- 43 - Manual Transfer or Selector Device
- 46 - Reverse-phase or Phase-Balance Relay
- 47 - Phase-Sequence Voltage Relay
- 48 - Incomplete-Sequence Relay
- 49 - Machine or Transformer Thermal Relay
- 50 - Instantaneous Overcurrent
- 51 - AC Time Overcurrent Relay

- 52 - AC Circuit Breaker
- 53 - Exciter or DC Generator Relay
- 54 - High-Speed DC Circuit Breaker
- 55 - Power Factor Relay
- 56 - Field Application Relay
- 59 - Overvoltage Relay
- 60 - Voltage or Current Balance Relay
- 61 - Machine Split Phase Current Balance
- 62 - Time-Delay Stopping or Opening Relay
- 63 - Pressure Switch
- 64 - Ground Detector Relay
- 65 - Governor
- 66 - Starts per Hour
- 67 - AC Directional Overcurrent Relay
- 68 - Blocking Relay
- 69 - Permissive Control Device
- 71 - Level Switch
- 72 - DC Circuit Breaker
- 74 - Alarm Relay
- 75 - Position Changing Mechanism
- 76 - DC Overcurrent Relay
- 78 - Phase-Angle Measuring or Out-of-Step Protective Relay
- 79 - AC-Reclosing Relay
- 81 - Frequency Relay
- 83 - Automatic Selective Control or Transfer Relay
- 84 - Operating Mechanism
- 85 - Carrier or Pilot-Wire Receiver Relay
- 86 - Lockout Relay
- 87 - Differential Protective Relay
- 89 - Line Switch
- 90 - Regulating Device
- 91 - Voltage Directional Relay
- 92 - Voltage and Power Directional Relay
- 94 - Tripping or Trip-Free Relay
- 95 - Reluctance Torque Synchrocheck
- 96 - Autoloading Relay

Methods of Fault Detections

- Magnitude of current – Overcurrent protection
- Magnitude of current in earth and neutral – Earth fault protection
- Magnitude and angle of Impedance (Ratio V/I) Impedance protection
- Difference between two currents – Differential protection
- Difference between phase angles of two currents – phase comparison protection
- Magnitude of negative sequence current
- Magnitude of voltage – Overvoltage or undervoltage protection
- Magnitude of frequency – Overvoltage or underfrequency protection
- Temperature – Thermal protection
- Specials i.e. transformer gas protection