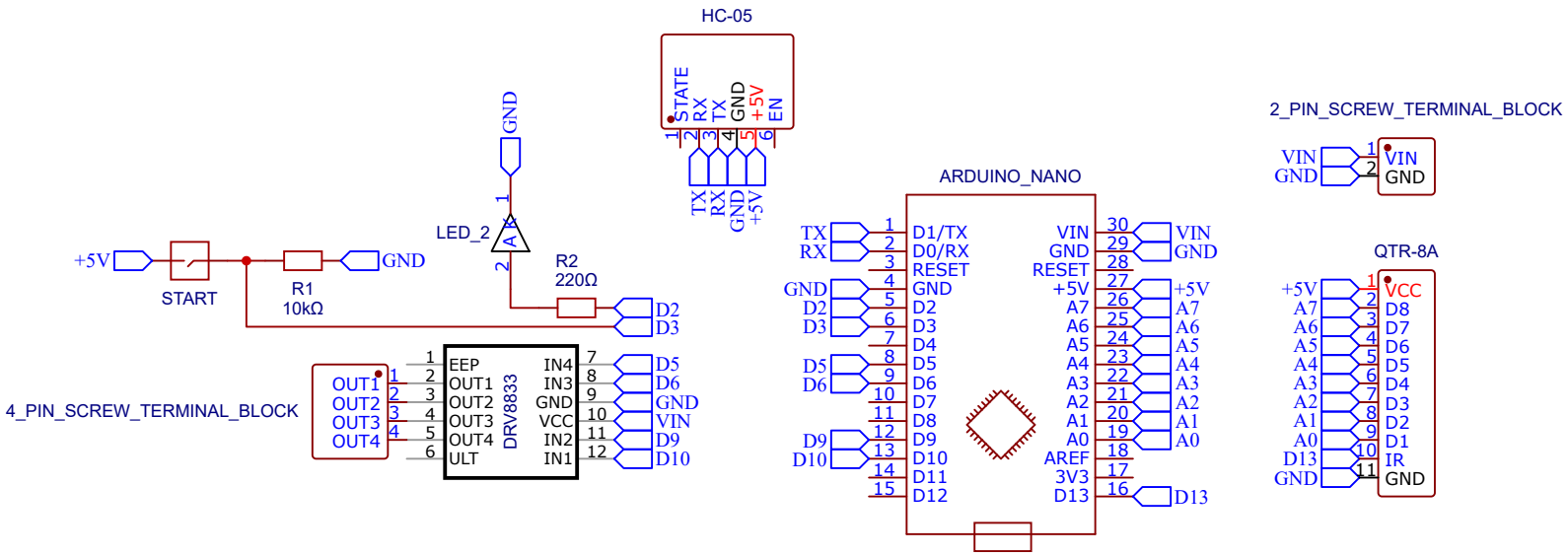

TITLE: Line Following Robot		REV: 1.0
EasyEDA	Company: HOGENT	Sheet: 1/1
	Date: 2023-12-15 Drawn By: Robin Coppens	