ChipWhisperer

CW308 UFO Board

THE DESIGN DOCUMENTATION IS PROVIDED "AS IS", WITHOUT WARRANTY OF ANY KIND, EXPRESS OR IMPLIED, INCLUDING BUT NOT LIMITED TO THE WARRANTIES OF MERCHANTABILITY, FITNESS FOR A PARTICULAR PURPOSE AND NONINFRINGEMENT. IN NO EVENT SHALL THE AUTHORS OR COPYRIGHT HOLDERS BE LIABLE FOR ANY CLAIM, DAMAGES OR OTHER LIABILITY, WHETHER IN AN ACTION OF CONTRACT, TORT OR OTHERWISE, ARISING FROM, OUT OF OR IN CONNECTION WITH THE DESIGN DOCUMENTATION OR THE USE OR OTHER DEALINGS IN THE DESIGN DOCUMENTATION.

Change Log

Changes in -04:
*Addition of S9, R53
*Removed C2/C3 (not used)

Changes in -03:
* Change clock resistor.
* Move switches slightly to give clearance for lifter board.
* Add adjustable regulator & jumper to select FILTIN source.

Changes in -02:
* Add test points for GND, Trig.
* Add 100K pull-up on JTAG, nRST.
* Fixed size of holes in XTAL pins.
* Add pull-downs on capacitors.
* LEDs moved from switches to beside terminals.
* Addition of 5V switch.

Title: **Mechanical & Notes**		Approved: YES	NewAE Technology
Rev: 04	Project: NPCA-CW308	License: GPL/OTHER	
Date: 2026-04-21	Time: 10:32:46 AM	Sheet 1 of 5	Copyright © NewAE Technology Inc. NewAE.com
File: CW308_Mechanical.SchDoc			

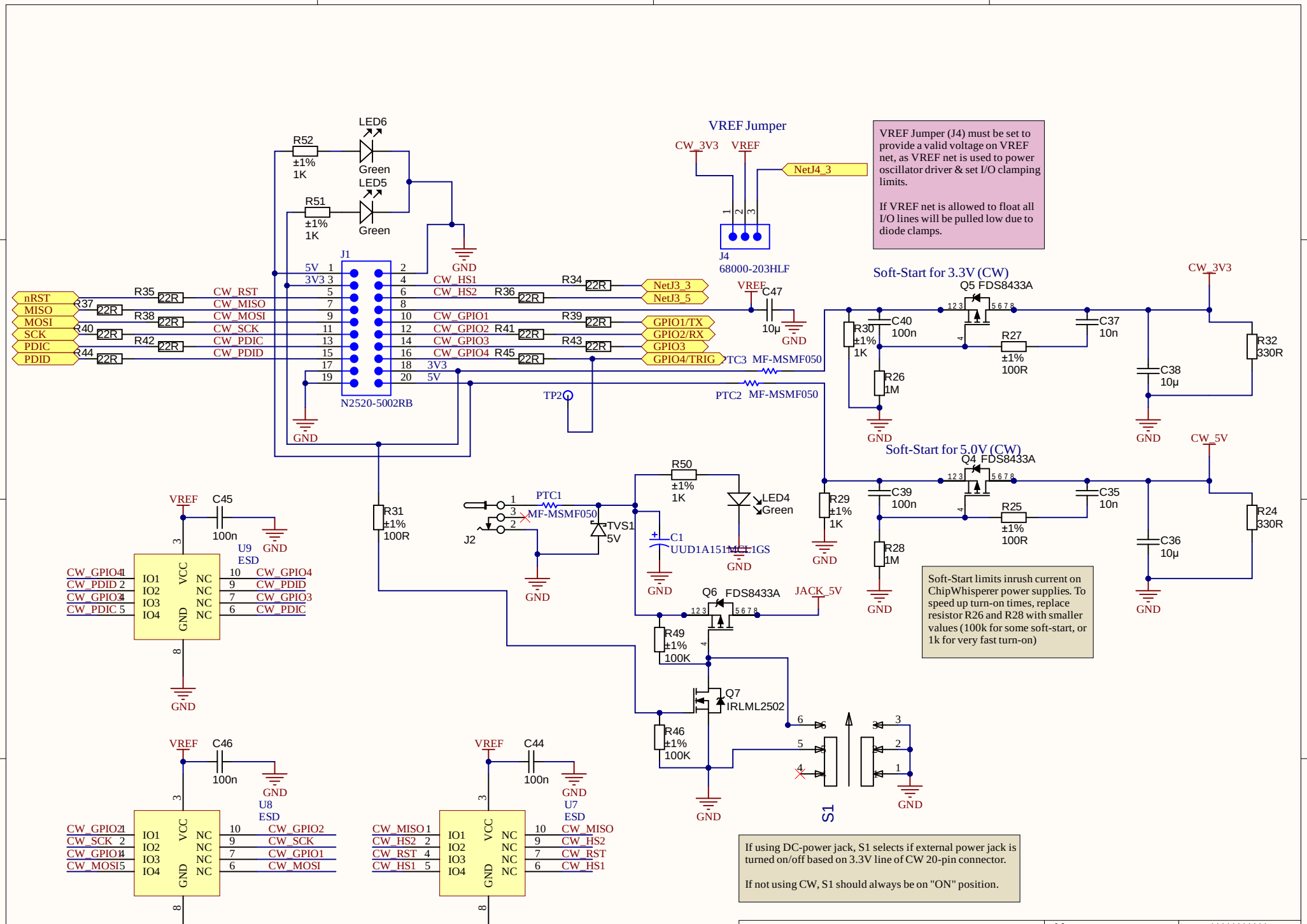

Title: **IO Connectors**		Approved: YES	NewAE Technology
Rev: 04	Project: NPCA-CW308	License: GPL/OTHER	
Date: 2026-04-21	Time: 10:32:46 AM	Sheet2 of 5	Copyright © NewAE Technology Inc. NewAE.com
File: CW308_Connectors.SchDoc			

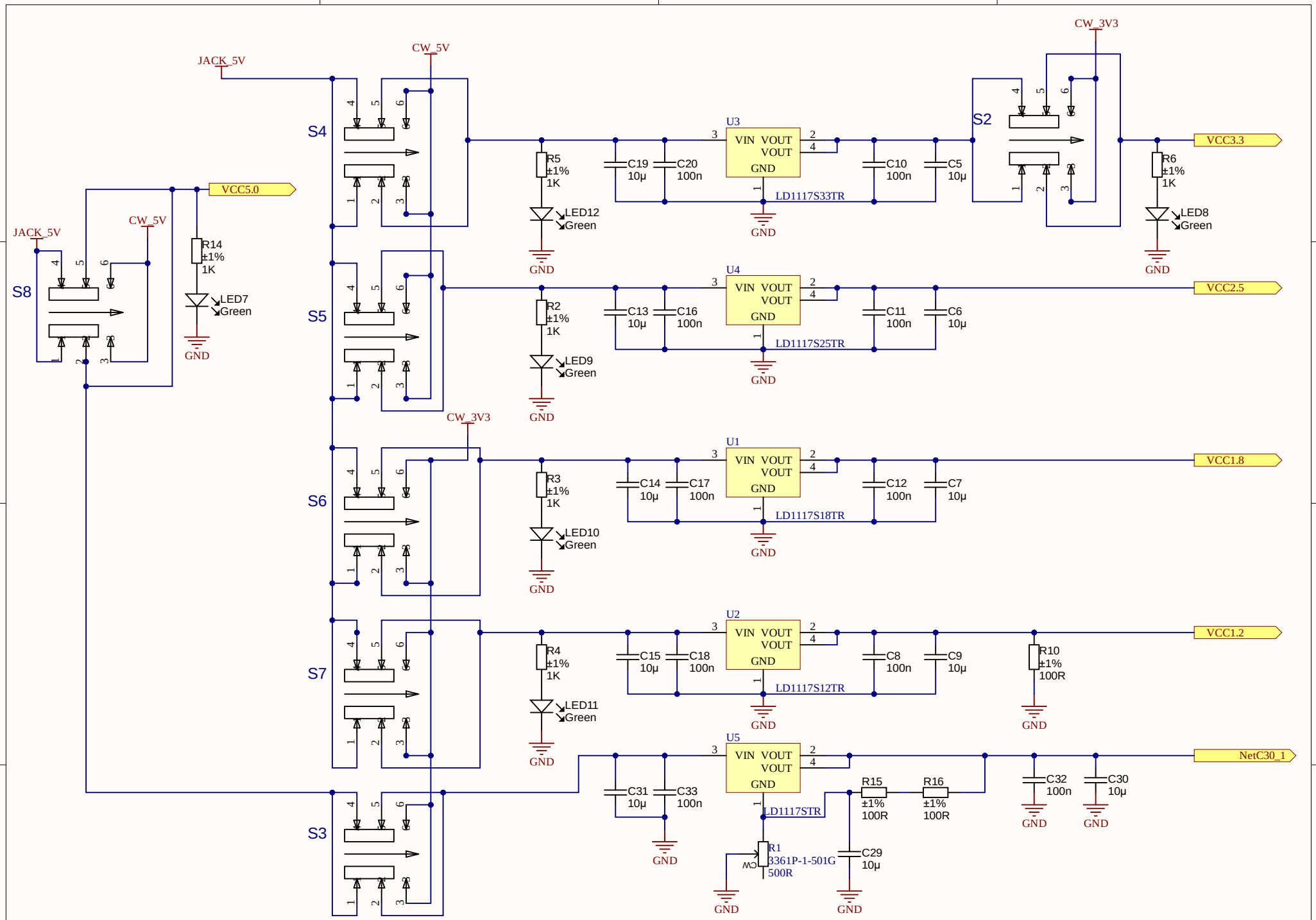

Title: **Target Linear Regulators**		Approved: YES	NewAE Technology
Rev: 04	Project: NPCA-CW308	License: GPL/OTHER	
Date: 2026-04-21	Time: 10:32:46 AM	Sheet3 of 5	Copyright © NewAE Technology Inc. NewAE.com
File: CW308_Power.SchDoc			

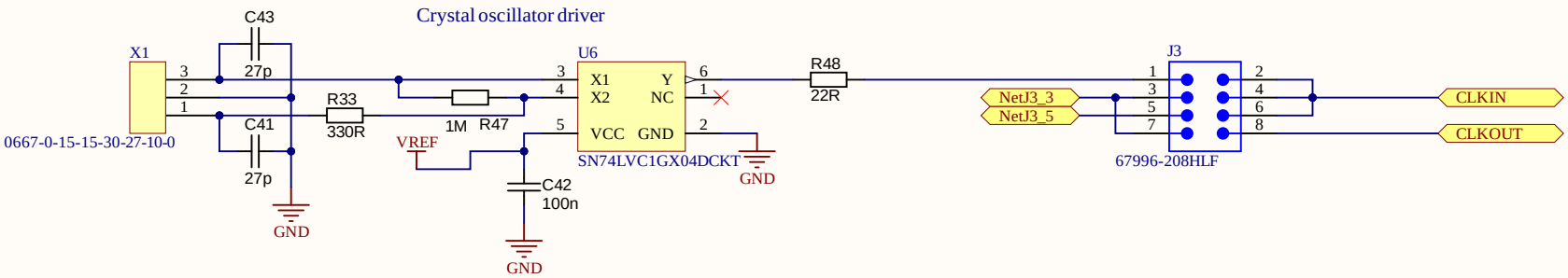

Oscillator supply derived from VREF jumper (J4).

Oscillator should work with most 2 or 3-pin parallel resonance crystals where 18-24pF loading expected.

X1 pins (for BOM purpose only)

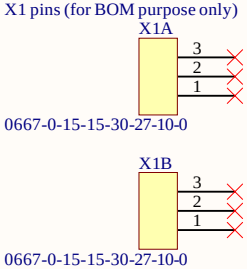

Title: **Crystal Oscillator**		Approved: YES	NewAE Technology
Rev: 04	Project: NPCA-CW308	License: GPL/OTHER	
Date: 2026-04-21	Time: 10:32:46 AM	Sheet4 of 5	Copyright © NewAE Technology Inc. NewAE.com
File: CW308_Clock.SchDoc			

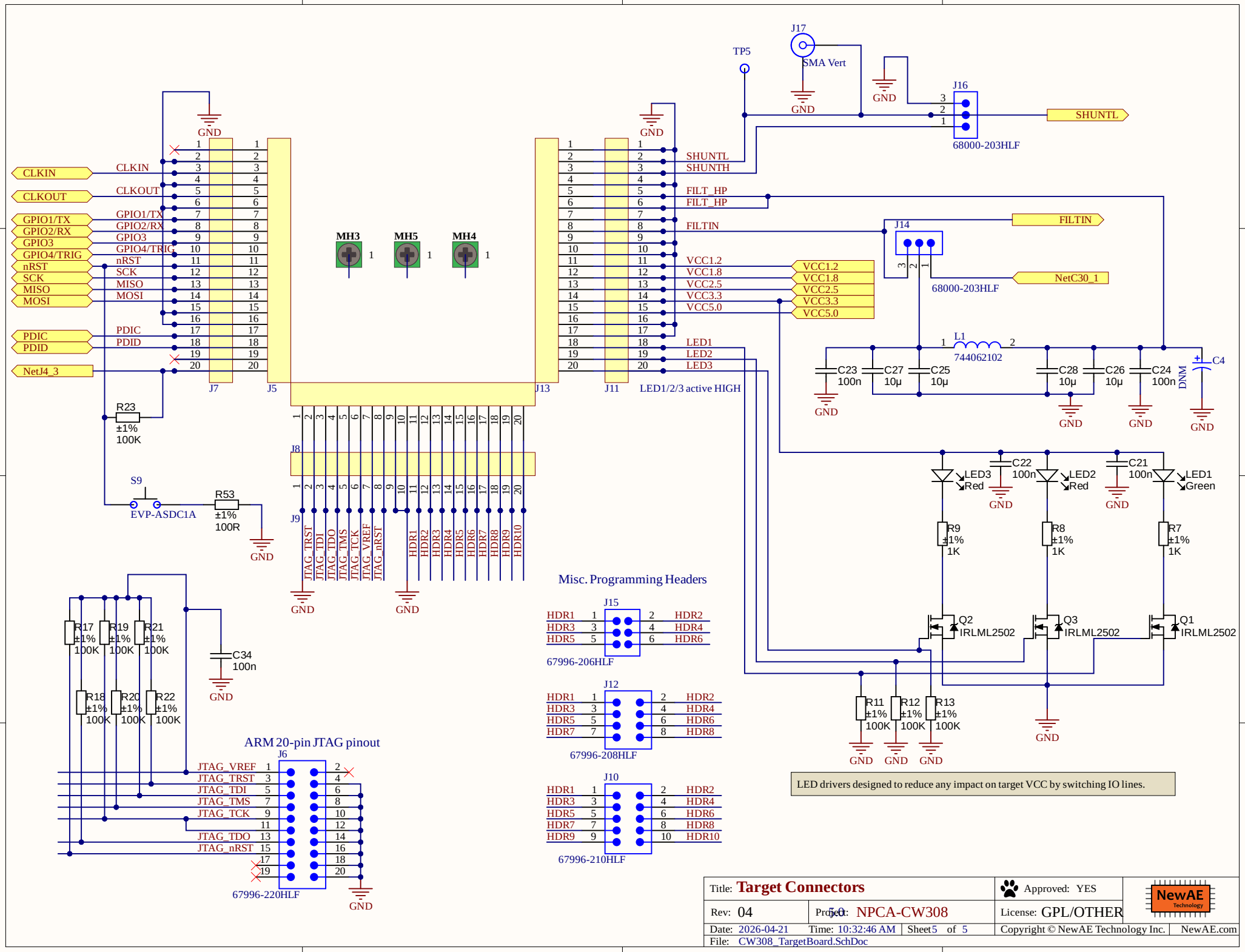

Title: **Target Connectors**		Approved: YES	NewAE Technology
Rev: 04	Project: NPCA-CW308	License: GPL/OTHER	
Date: 2026-04-21	Time: 10:32:46 AM	Sheet5 of 5	Copyright © NewAE Technology Inc. NewAE.com
File: CW308_TargetBoard.SchDoc			