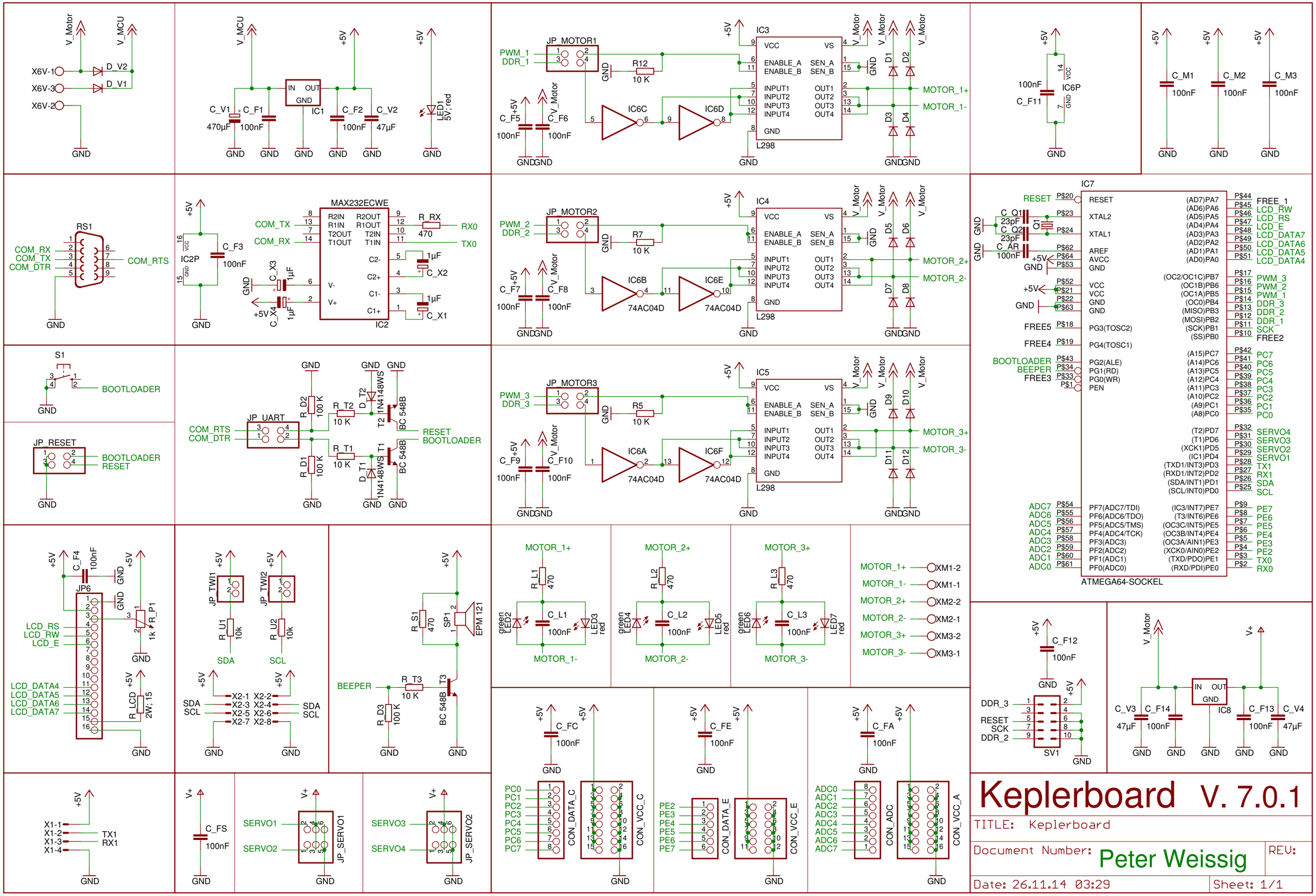
V_Motor
V_MCU
X6V-1
X6V-3
X6V-2
D_V2
D_V1
GND
IN OUT
GND
IC1
C_V1
C_F1
470µF
100nF
C_F2
C_V2
100nF
47µF
LED1
5V; red
+5V
JP_MOTOR1
PWM_1
DDR_1
R12
10 K
IC3
VCC
VS
ENABLE_A
ENABLE_B
SEN_A
SEN_B
INPUT1
INPUT2
INPUT3
INPUT4
OUT1
OUT2
OUT3
OUT4
L298
IC6C
IC6D
C_F5
C_F6
D1
D2
D3
D4
MOTOR_1+
MOTOR_1-
IC6P
C_F11
C_M1
C_M2
C_M3
RS1
COM_RX
COM_TX
COM_DTR
COM_RTS
IC2P
C_F3
MAX232ECWE
R2IN
R1IN
T2OUT
T1OUT
R2OUT
R1OUT
T2IN
T1IN
C2-
C2+
C1-
C1+
V-
V+
R_RX
470
RX0
TX0
C_X1
C_X2
C_X3
C_X4
IC2
JP_MOTOR2
PWM_2
DDR_2
R7
IC4
IC6B
IC6E
74AC04D
C_F7
C_F8
D5
D6
D7
D8
MOTOR_2+
MOTOR_2-
IC7
RESET
C_Q1
23pF
C_Q2
23pF
C_AR
100nF
Q1
XTAL2
XTAL1
AREF
AVCC
VCC
PG3(TOSC2)
PG4(TOSC1)
PG2(ALE)
PG1(RD)
PG0(WR)
PEN
FREE5
FREE4
BOOTLOADER
BEEPER
FREE3
(AD7)PA7
(AD6)PA6
(AD5)PA5
(AD4)PA4
(AD3)PA3
(AD2)PA2
(AD1)PA1
(AD0)PA0
(OC2/OC1C)PB7
(OC1B)PB6
(OC1A)PB5
(OC0)PB4
(MISO)PB3
(MOSI)PB2
(SCK)PB1
(SS)PB0
(A15)PC7
(A14)PC6
(A13)PC5
(A12)PC4
(A11)PC3
(A10)PC2
(A9)PC1
(A8)PC0
(T2)PD7
(T1)PD6
(XCK1)PD5
(IC1)PD4
(TXD1/INT3)PD3
(RXD1/INT2)PD2
(SDA/INT1)PD1
(SCL/INT0)PD0
(IC3/INT7)PE7
(T3/INT6)PE6
(OC3C/INT5)PE5
(OC3B/INT4)PE4
(OC3A/AIN1)PE3
(XCK0/AIN0)PE2
(TXD/PDO)PE1
(RXD/PDI)PE0
PF7(ADC7/TDI)
PF6(ADC6/TDO)
PF5(ADC5/TMS)
PF4(ADC4/TCK)
PF3(ADC3)
PF2(ADC2)
PF1(ADC1)
PF0(ADC0)
ATMEGA64-SOCKEL
FREE_1
LCD_RW
LCD_RS
LCD_E
LCD_DATA7
LCD_DATA6
LCD_DATA5
LCD_DATA4
PWM_3
PWM_2
PWM_1
DDR_3
DDR_2
DDR_1
SCK
FREE2
PC7
PC6
PC5
PC4
PC3
PC2
PC1
PC0
SERVO4
SERVO3
SERVO2
SERVO1
TX1
RX1
SDA
SCL
PE7
PE6
PE5
PE4
PE3
PE2
TX0
RX0
S1
BOOTLOADER
JP_RESET
JP_UART
COM_RTS
COM_DTR
R_D2
100 K
R_T2
10 K
D_T2
1N4148WS
T2
BC 548B
RESET
R_D1
R_T1
D_T1
T1
JP_MOTOR3
PWM_3
DDR_3
R5
IC5
IC6A
IC6F
C_F9
C_F10
D9
D10
D11
D12
MOTOR_3+
MOTOR_3-
JP6
LCD_RS
LCD_RW
LCD_E
LCD_DATA4
LCD_DATA5
LCD_DATA6
LCD_DATA7
C_F4
100nF
R_P1
1k
R_LCD
2W; 15
JP_TWI1
JP_TWI2
R_U1
10k
R_U2
10k
X2-1
X2-3
X2-5
X2-7
X2-2
X2-4
X2-6
X2-8
R_S1
470
SP1
EPM 121
BEEPER
R_T3
10 K
R_D3
100 K
MOTOR_1+
R_L1
470
green
LED2
C_L1
100nF
LED3
red
MOTOR_1-
MOTOR_2+
R_L2
470
LED4
C_L2
LED5
MOTOR_2-
MOTOR_3+
R_L3
470
LED6
C_L3
LED7
MOTOR_3-
XM1-2
XM1-1
XM2-2
XM2-1
XM3-2
XM3-1
C_F12
DDR_3
RESET
SCK
DDR_2
SV1
IN OUT
GND
IC8
C_V3
C_F14
47µF
C_F13
C_V4
V+
X1-1
X1-2
X1-3
X1-4
C_FS
JP_SERVO1
JP_SERVO2
C_FC
CON_DATA_C
CON_VCC_C
C_FE
CON_DATA_E
CON_VCC_E
C_FA
CON_ADC
CON_VCC_A
Keplerboard V. 7.0.1
TITLE: Keplerboard
Document Number: Peter Weissig
REV:
Date: 26.11.14 03:29
Sheet: 1/1