L1: PA7 (in)
L2: PA11 (in)

REMOTE.R: PB7 (I2C1_SDA / USART0_RX)
REMOTE.T: PB6 (I2C1_SCL / USART0_TX)

V_BATT: PA4 (analog)
CURRENT_DC: PA6 (analog)
EMERGENCY_OFF: PB12 (in) TIM0_Break_Input Current Measure
CHARGE_STATE: PF0 (in, pullup)

unused: PB4, PB5, PA6

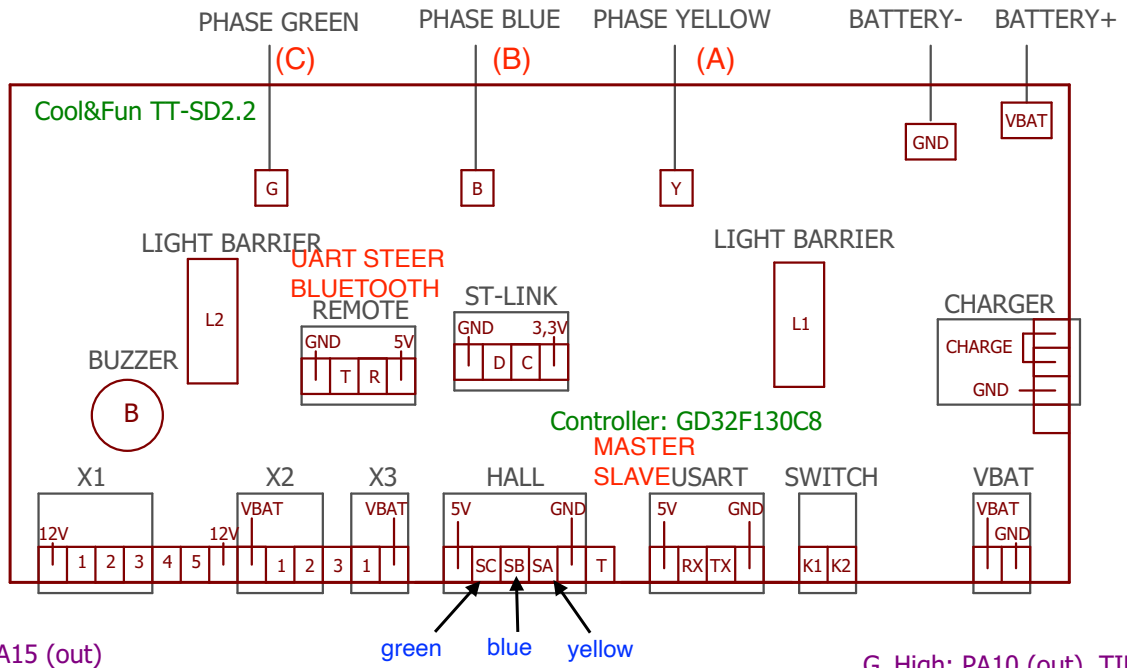

MPU6050.SDA: PB9 (I2C2)
MPU6050.SCL: PB8 (I2C2)

LED X1.1: PA15 (out)
LED X1.2: PA12 (out)
LED X1.3: ~~PB13~~ (out) PB-3
X1.4: N/A (PB4)
X1.5: N/A (PB5)

UPPER LED X2.1: PA1 (out)
LOWER LED X2.2: PA0 (out)
X2.3: N/A (connected with X3.1)

X3.1: PC13 (out)

X4.SC: PC14 (in)
X4.SB: PF1 (in)
X4.SA: PB11 (in)

X5.RX: PA3 (in, USART1)
X5.TX: PA2 (out, USART1)

BUZZER.B: PB10 (out)
SWITCH.K1: PC15 (in)
SELF_HOLD_LATCH: PB2 (out)

G_High: PA10 (out) TIM0_CH3
G_Low : PB15 (out) TIM0_CH3N
B_High: PA9 (out) TIM0_CH2
B_Low : PB14 (out) TIM0_CH2N
Y_High: PA8 (out) TIM0_CH1
Y_Low : PB13 (out) TIM0_CH1N

© Copyright Florian Stäblein 2018
HoverBoard_CoolAndFun
21.06.2018 19:05
Sheet: 1/2

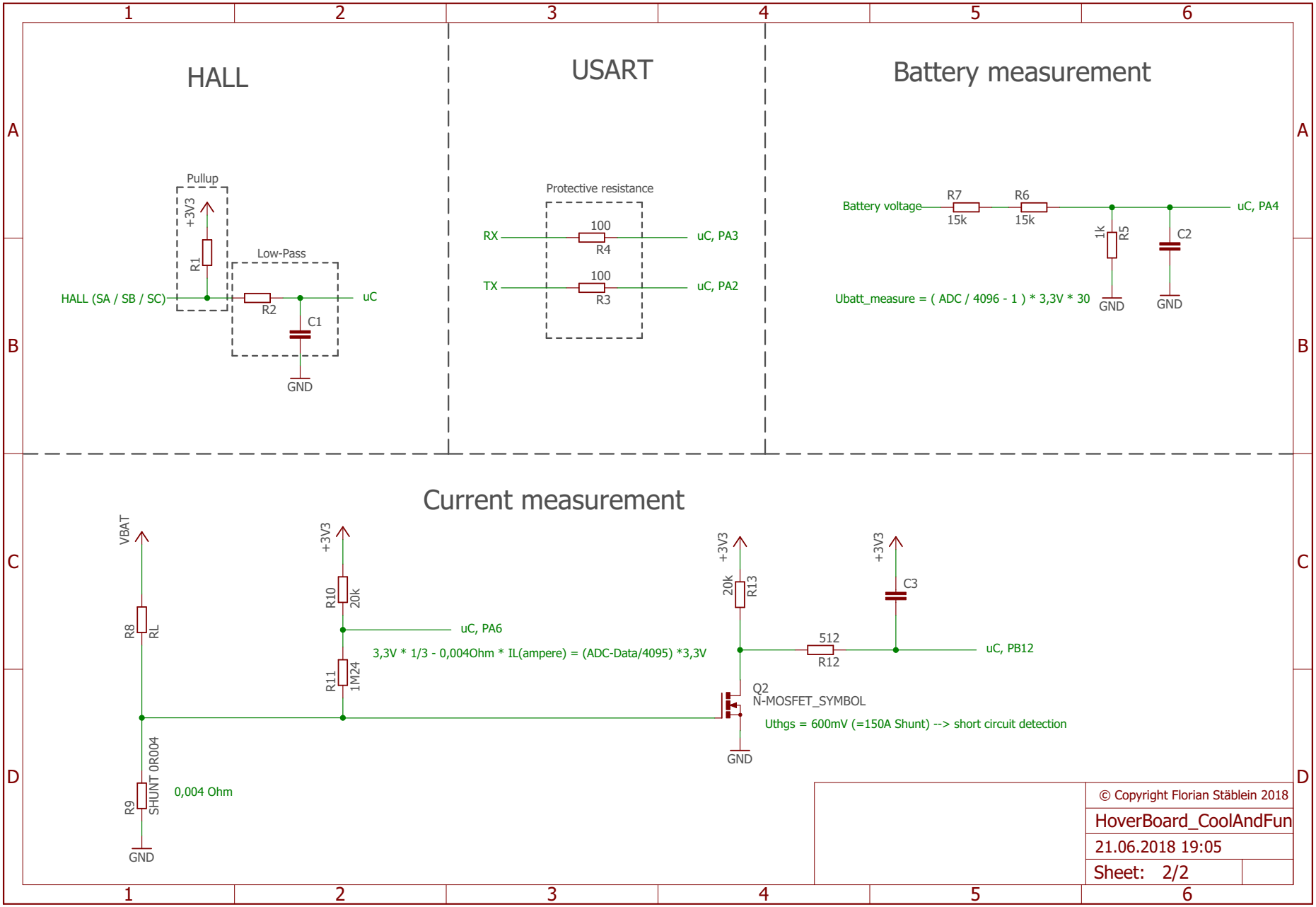
HALL
Pullup
+3V3
R1
Low-Pass
HALL (SA / SB / SC)
R2
C1
uC
GND
USART
Protective resistance
RX
100
R4
uC, PA3
TX
100
R3
uC, PA2
Battery measurement
Battery voltage
R7
15k
R6
15k
uC, PA4
1k
R5
C2
Ubatt_measure = (ADC / 4096 - 1) * 3,3V * 30
GND
GND
Current measurement
VBAT
R8
RL
R9
SHUNT 0R004
0,004 Ohm
GND
+3V3
R10
20k
uC, PA6
R11
1M24
3,3V * 1/3 - 0,004Ohm * IL(ampere) = (ADC-Data/4095) *3,3V
+3V3
20k
R13
512
R12
+3V3
C3
uC, PB12
Q2
N-MOSFET_SYMBOL
Uthgs = 600mV (=150A Shunt) --> short circuit detection
GND
© Copyright Florian Stäblein 2018
HoverBoard_CoolAndFun
21.06.2018 19:05
Sheet: 2/2