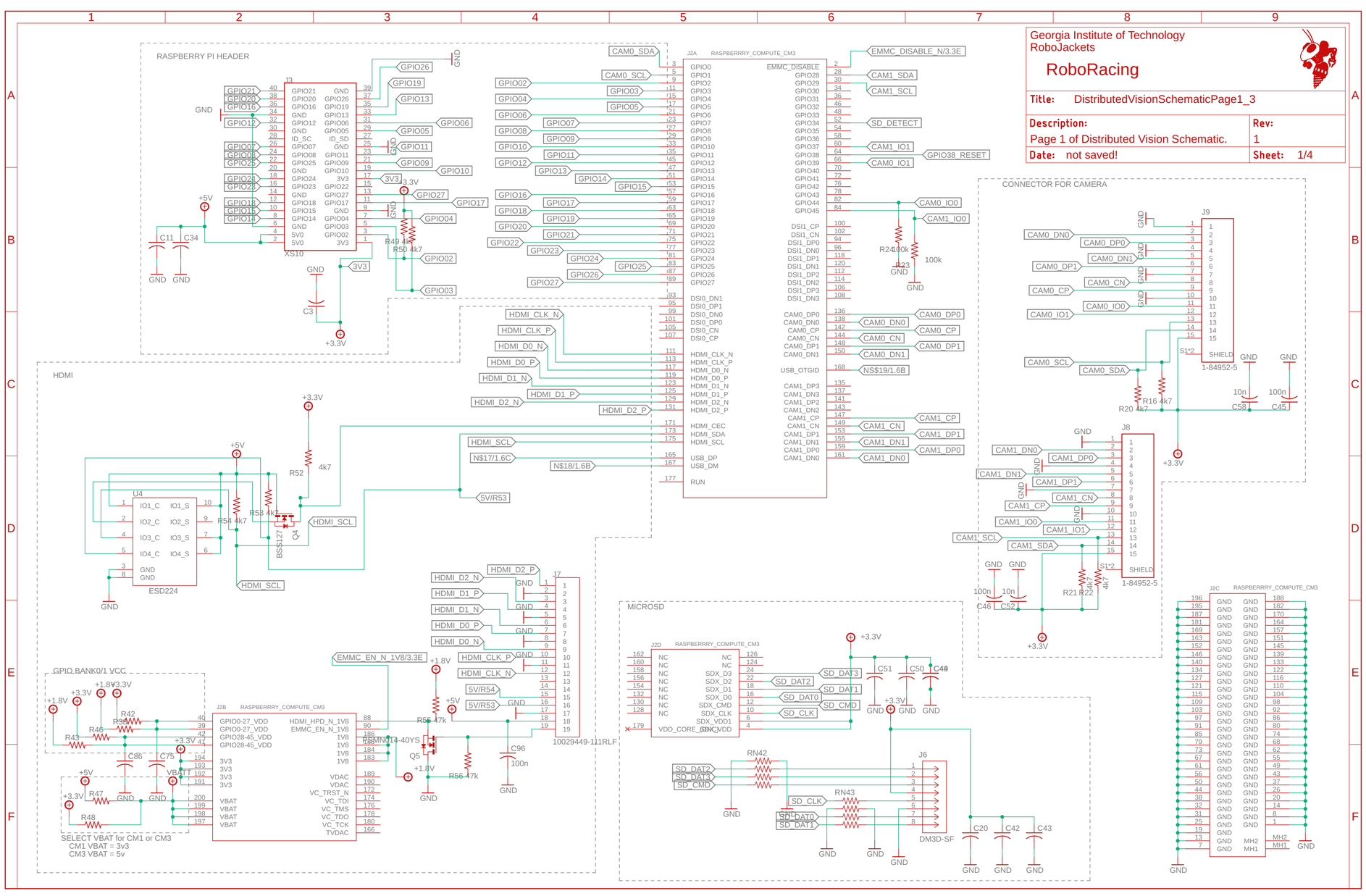
Georgia Institute of Technology
RoboJackets
RoboRacing
Title: DistributedVisionSchematicPage1_3
Description:
Page 1 of Distributed Vision Schematic.
Rev: 1
Date: not saved!
Sheet: 1/4
RASPBERRY PI HEADER
J2A RASPBERRRY_COMPUTE_CM3
CONNECTOR FOR CAMERA
HDMI
MICROSD
GPIO BANK0/1 VCC
SELECT VBAT for CM1 or CM3
CM1 VBAT = 3v3
CM3 VBAT = 5v
ESD224
10029449-111RLF
1-84952-5
DM3D-SF

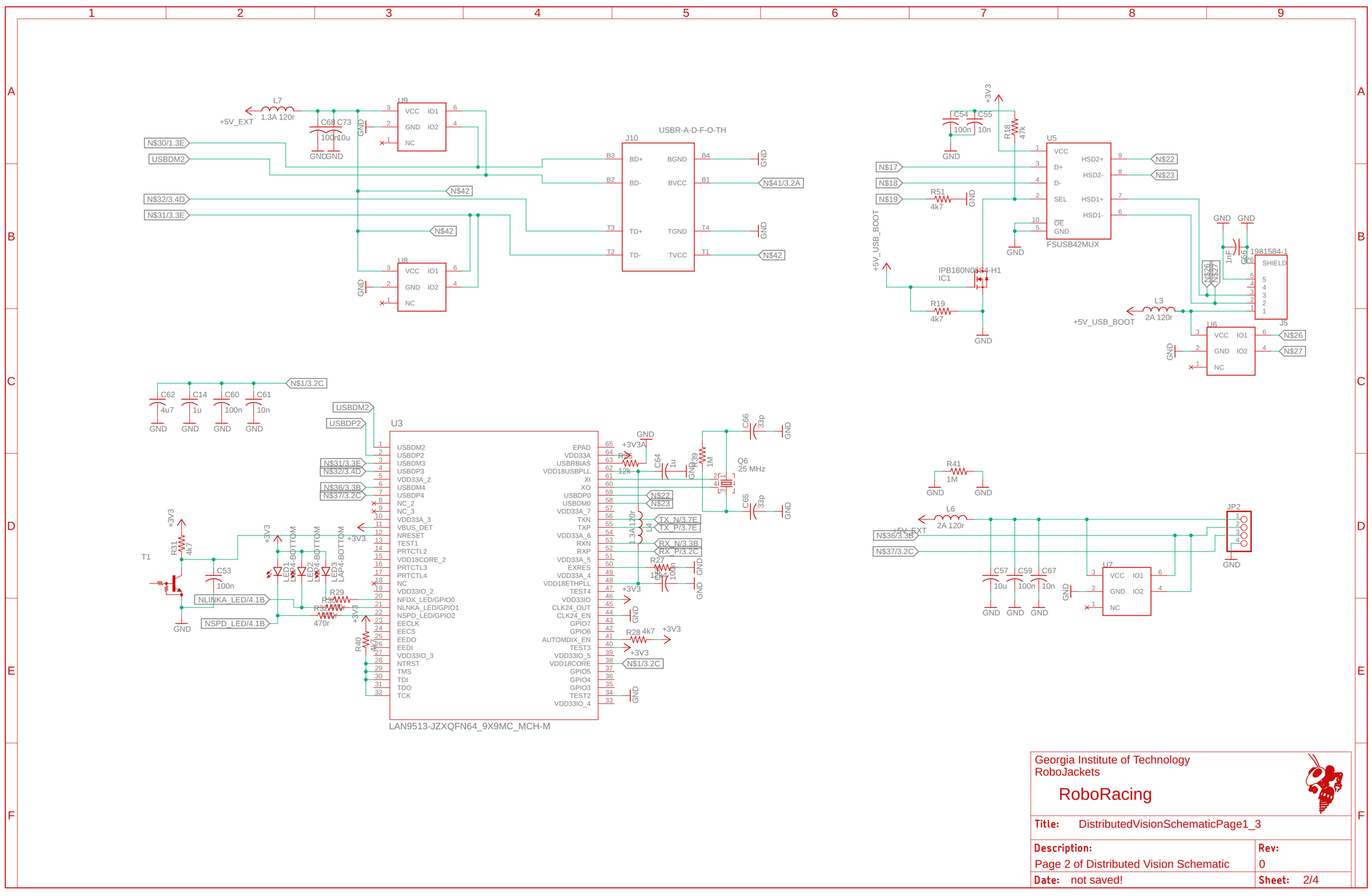

Georgia Institute of Technology
RoboJackets

RoboRacing

Title: DistributedVisionSchematicPage1_3	
Description: Page 2 of Distributed Vision Schematic	Rev: 0
Date: not saved!	Sheet: 2/4

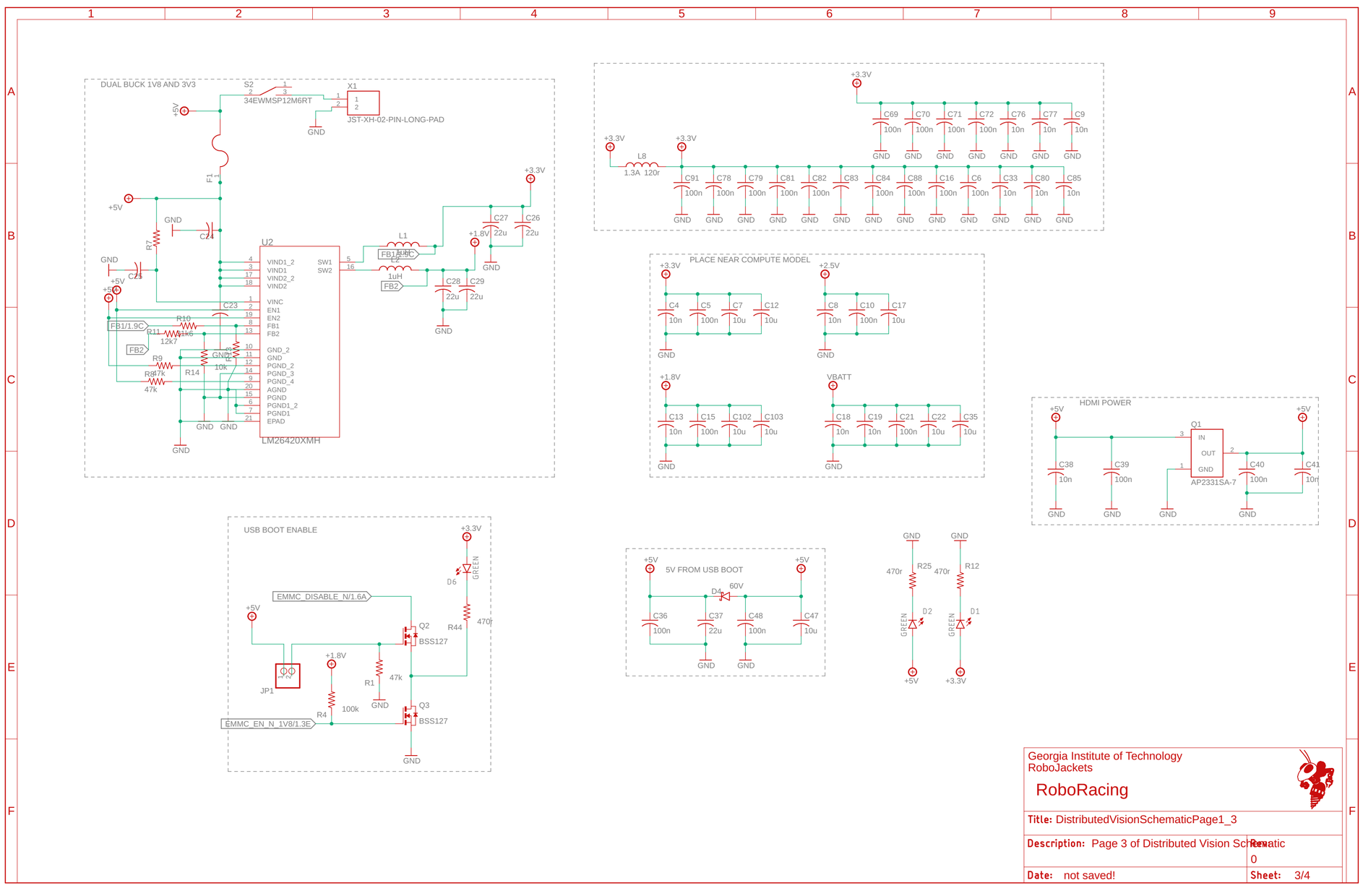
DUAL BUCK 1V8 AND 3V3
S2
34EWMSP12M6RT
X1
JST-XH-02-PIN-LONG-PAD
U2
LM26420XMH
PLACE NEAR COMPUTE MODEL
HDMI POWER
Q1
AP2331SA-7
USB BOOT ENABLE
EMMC_DISABLE_N/1.6A
EMMC_EN_N_1V8/1.3E
5V FROM USB BOOT
Georgia Institute of Technology
RoboJackets
RoboRacing
Title: DistributedVisionSchematicPage1_3
Description: Page 3 of Distributed Vision Schematic
Rev: 0
Date: not saved!
Sheet: 3/4

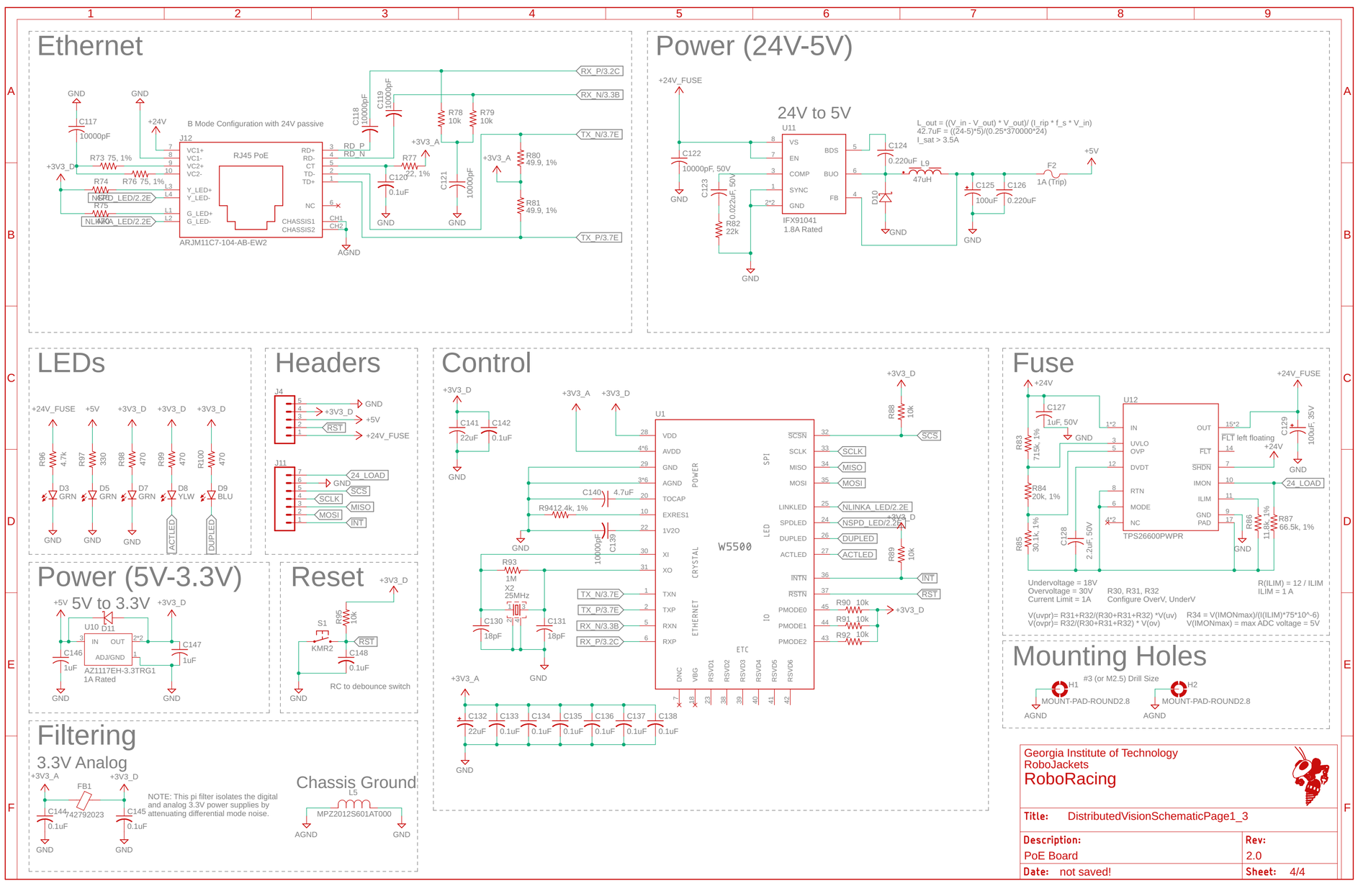
Ethernet
B Mode Configuration with 24V passive
J12
RJ45 PoE
ARJM11C7-104-AB-EW2
RX_P/3.2C
RX_N/3.3B
TX_N/3.7E
TX_P/3.7E
Power (24V-5V)
24V to 5V
U11
IFX91041
1.8A Rated
L_out = ((V_in - V_out) * V_out)/ (I_rip * f_s * V_in)
42.7uF = ((24-5)*5)/(0.25*370000*24)
I_sat > 3.5A
LEDs
Headers
J4
J11
Control
U1
W5500
Fuse
U12
TPS26600PWPR
FLT left floating
Undervoltage = 18V
Overvoltage = 30V
Current Limit = 1A
R30, R31, R32
Configure OverV, UnderV
R(ILIM) = 12 / ILIM
ILIM = 1 A
V(uvpr)= R31+R32/(R30+R31+R32) *V(uv)
V(ovpr)= R32/(R30+R31+R32) * V(ov)
R34 = V(IMONmax)/((ILIM)*75*10^-6)
V(IMONmax) = max ADC voltage = 5V
Power (5V-3.3V)
5V to 3.3V
AZ1117EH-3.3TRG1
1A Rated
Reset
RC to debounce switch
Filtering
3.3V Analog
NOTE: This pi filter isolates the digital and analog 3.3V power supplies by attenuating differential mode noise.
Chassis Ground
Mounting Holes
#3 (or M2.5) Drill Size
MOUNT-PAD-ROUND2.8
Georgia Institute of Technology
RoboJackets
RoboRacing
Title: DistributedVisionSchematicPage1_3
Description: PoE Board
Rev: 2.0
Date: not saved!
Sheet: 4/4