A5 python SDK

仓库地址

https://github.com/ARXroboticsX/A5

00硬件设备连接

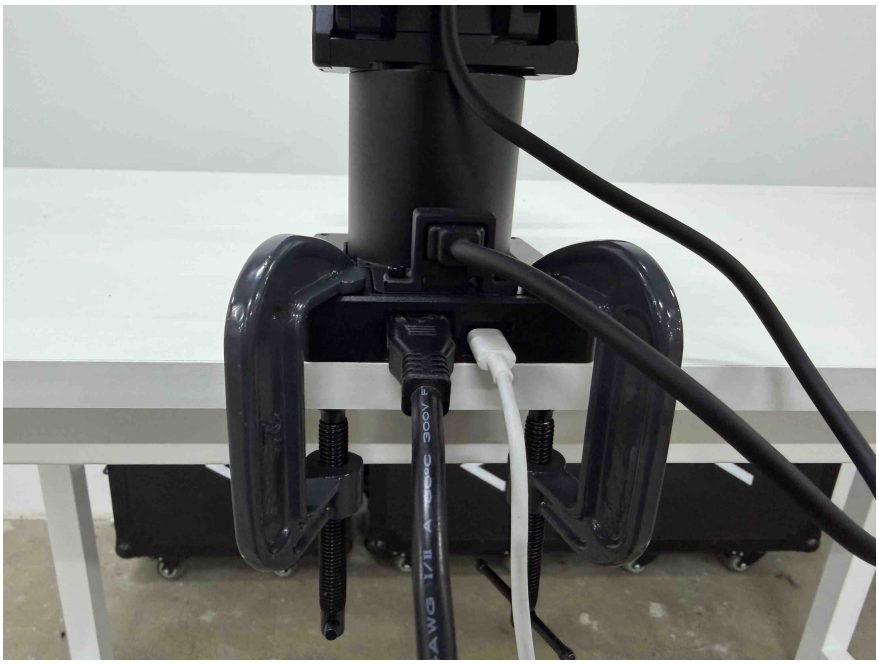

00环境配置

A5/tools/

代码块

```
./01_global_nopasswd_sudo.sh.x
./02install.x
./03_install_common_packages.sh.x
```

A配置CAN设备

设备如未更改，只需配置一次即可

A5/ARX_CAN/

代码块

```
./search
```

```
ATTRS{serial}=="004800435547570820313031"
ATTRS{serial}=="0000:00:14.0"
```

Copy number to arx_can.rulels,and save

```
ARX_CAN > arx_can.rules
SUBSYSTEM=="tty", ATTRS{idVendor}=="16d0", ATTRS{idProduct}=="117e", ATTRS{serial}=="004800435547570820313031", SYMLINK+="arxcan1"
SUBSYSTEM=="tty", ATTRS{idVendor}=="16d0", ATTRS{idProduct}=="117e", ATTRS{serial}=="206D35A04831", SYMLINK+="arxcan3"
SUBSYSTEM=="tty", ATTRS{idVendor}=="16d0", ATTRS{idProduct}=="117e", ATTRS{serial}=="206F358B4831", SYMLINK+="arxcan6"
```

代码块

```
./set
```

Start can

Cd arx_can,start the number which you want.

代码块

```
./arx_can1
```

B编译

A5/

代码块

```
./build.sh
```

```
-- Installing: /home/arx/00github/A5/bimanual/api/.//arx_hardware_interface
-- Installing: /home/arx/00github/A5/bimanual/api/.//arx_hardware_interface/include
-- Installing: /home/arx/00github/A5/bimanual/api/.//arx_hardware_interface/include/arx_hardware_interface
-- Installing: /home/arx/00github/A5/bimanual/api/.//arx_hardware_interface/include/arx_hardware_interface/typedef
-- Installing: /home/arx/00github/A5/bimanual/api/.//arx_hardware_interface/include/arx_hardware_interface/typedef/HybridJointTypeDef.hpp
-- Installing: /home/arx/00github/A5/bimanual/api/./arx_r5_python/arx_r5_python.cpython-312-x86_64-linux-gnu.so
-- Set non-toolchain portion of runtime path of "/home/arx/00github/A5/bimanual/api/./arx_r5_python/arx_r5_python.cpython-312-x86_64-linux-gnu.so" to "
-- Installing: /home/arx/00github/A5/bimanual/api/./arx_r5_python/kinematic_solver.cpython-312-x86_64-linux-gnu.so
-- Set non-toolchain portion of runtime path of "/home/arx/00github/A5/bimanual/api/./arx_r5_python/kinematic_solver.cpython-312-x86_64-linux-gnu.so" t
```

C运行

A5/

代码块

```
source ./setup.sh
python3 test_single_arm.py
```

SDK

0>夹爪控制

set_gripper_pos() //0,-3.14

1>姿态控制

set_ee_pose(pos,quat)

set_ee_pose_xyzrpy(xyzrpy)

2>关节位置控制（底层重力补偿）

set_joint_positions(positions)

3>电机MIT协议控制 （kp, kd, pos, vel, torque）

mit_joint_control(id,kp,kd,pos,vel,torque)

4>状态反馈

关节反馈（位置，速度，扭矩）+姿态反馈

4.1 关节位置反馈

get_joint_positions()

4.2 关节速度反馈

get_joint_velocities()

4.3 关节扭矩反馈

get_joint_currents()

4.4 末端位姿反馈

get_ee_pose() 四元数形式

get_ee_pose_xyzrpy() 欧拉角形式

5>重力补偿

gravity_compensation()

6>根据关节位置，解算出姿态

forward_kinematics()

7>更改末端质量

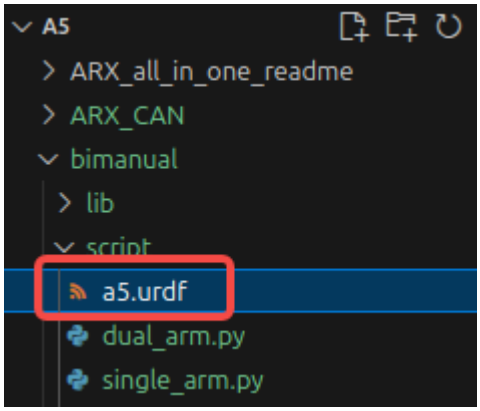

Change link6 mass

Remember to save

```
338     name="link6">
339     <inertial>
340       <origin
341         xyz="0.0548428859313633 2.60845782833845E-05 -0.000213553766113872"
342         rpy="0 0 0" />
343       <mass
344         value="0.65" />
345       <inertia
346         ixx="0.00033"
347         ixy="0.00000"
348         ixz="0.00000"
349         iyy="0.00046"
350         iyz="0.00004"
351         izz="0.00047" />
352     </inertial>
353     <visual>
354       <origin
```

8>校准命令

非必要不要校准

将机械臂摆放到下图位置执行A5_cali.sh joint6需要水平单独校准

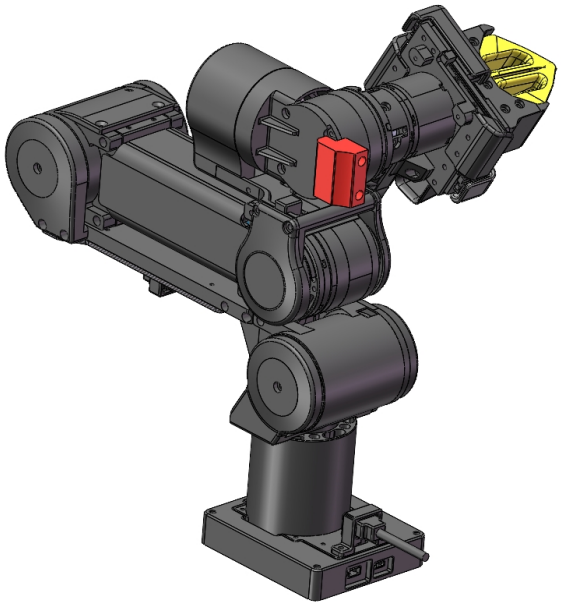

A5/ARX_CAN/

非必要不要校准

校准仅在CAN1时生效，需将校准的臂设置为CAN1，校准结束后再进行修改

代码块

```
//cali joint1-5
./J1-5cali
//cali joint6
./J6cali
```

	CANID
Joint1	1
Joint2	2
Joint3	4
Joint4	5
Joint5	6
Joint6	7
gripper	8