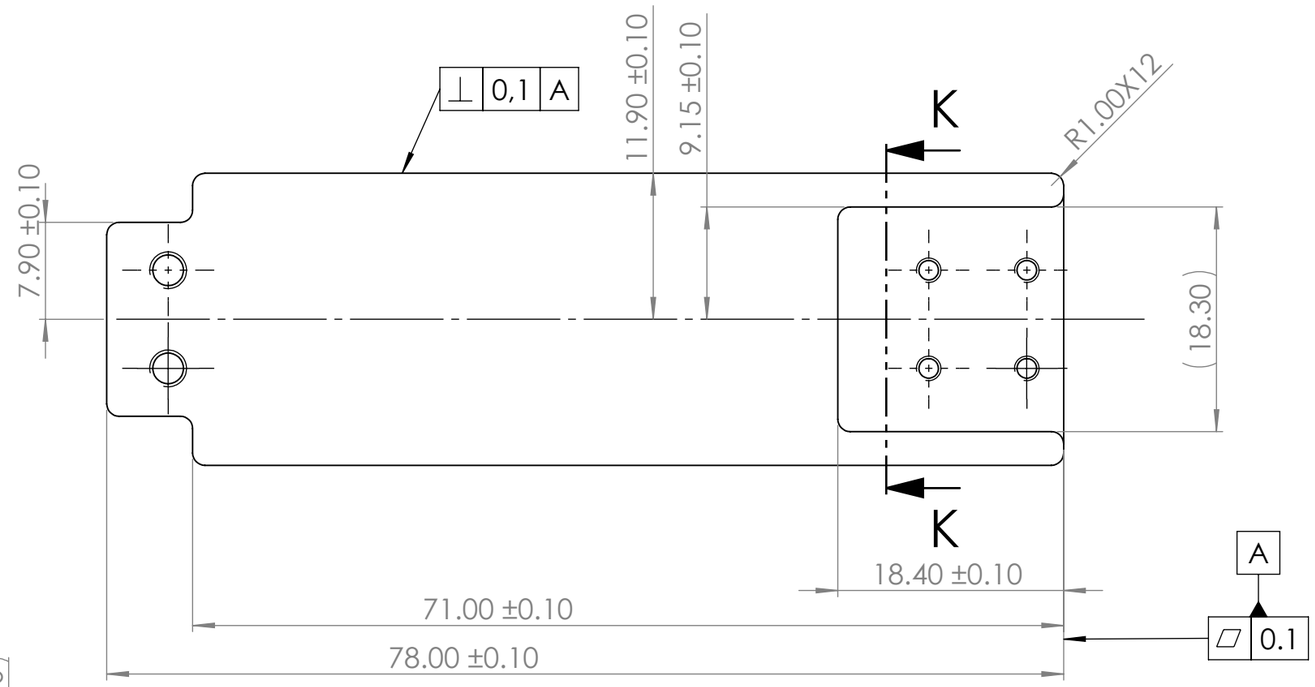

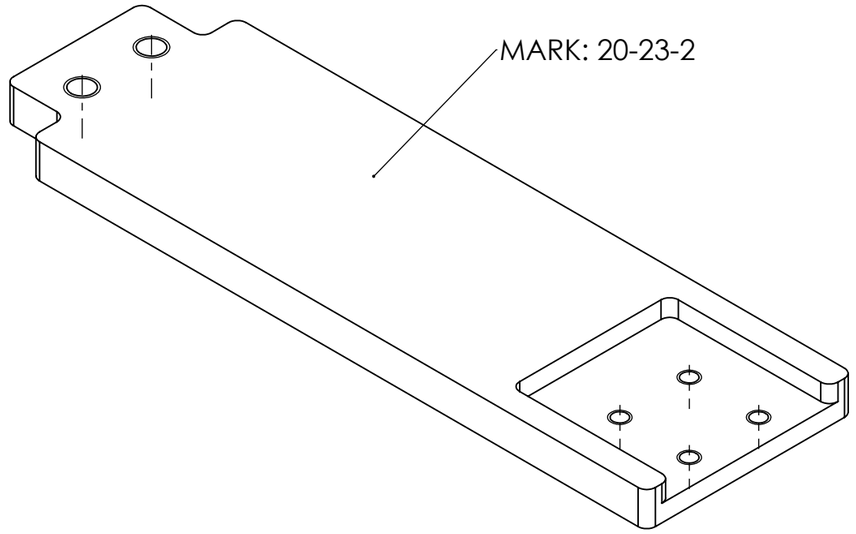

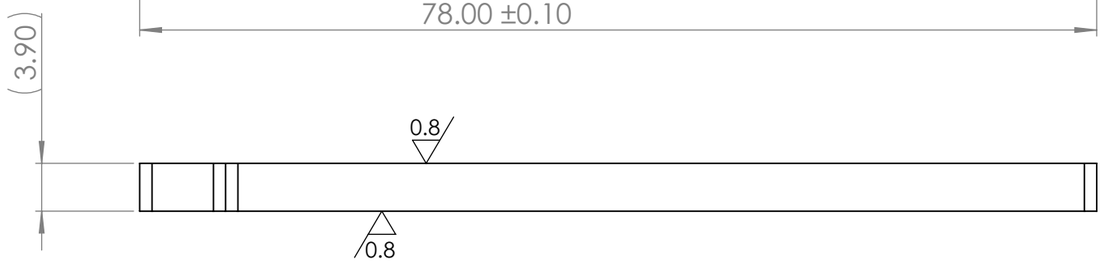

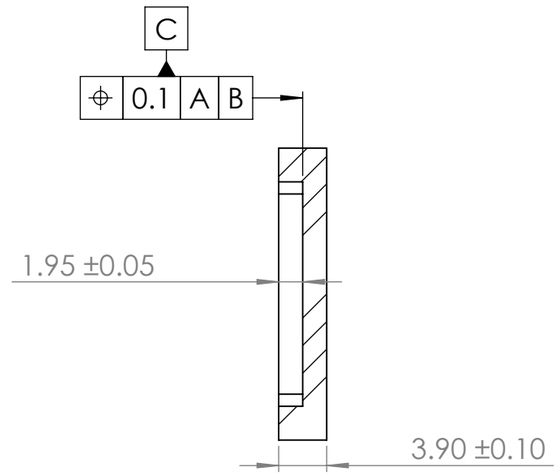

SECTION K-K

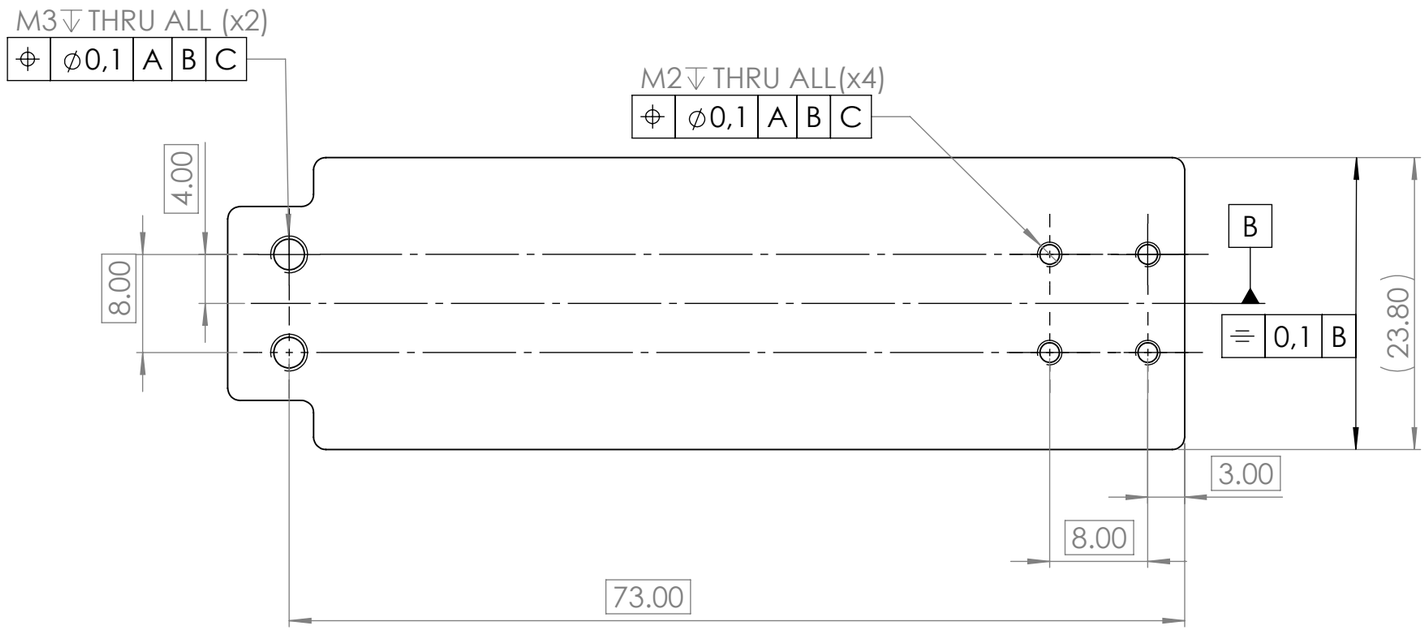

DEBURR AND BREAK SHARP EDGES

Qty	Part no.	Description	Material	Mass	Outer dimensions
40	20	Solenoid Plunger Back	1.0503 (C45)	49.200 g	78x23.8x3.9 mm

UNLESS OTHERWISE SPECIFIED:
Dimensions and finish acording to NEN ISO 2768mK

ROBOTEAM TWENTE

	NAME	DATE
DRAWN	Chris	30-01-2024
CHK'D	Bas	30-01-2024
APPV'D	Razvan	31-01-2024

DO NOT SCALE DRAWING

TITLE:
Solenoid Plunger Back

DWG NO. 202023 A3

REV: 2

SCALE:2:1

SHEET 1 OF 1