History		
Revsion	Date	Recording
		First release

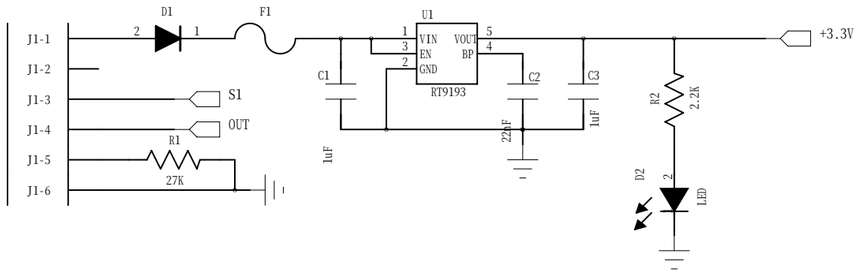

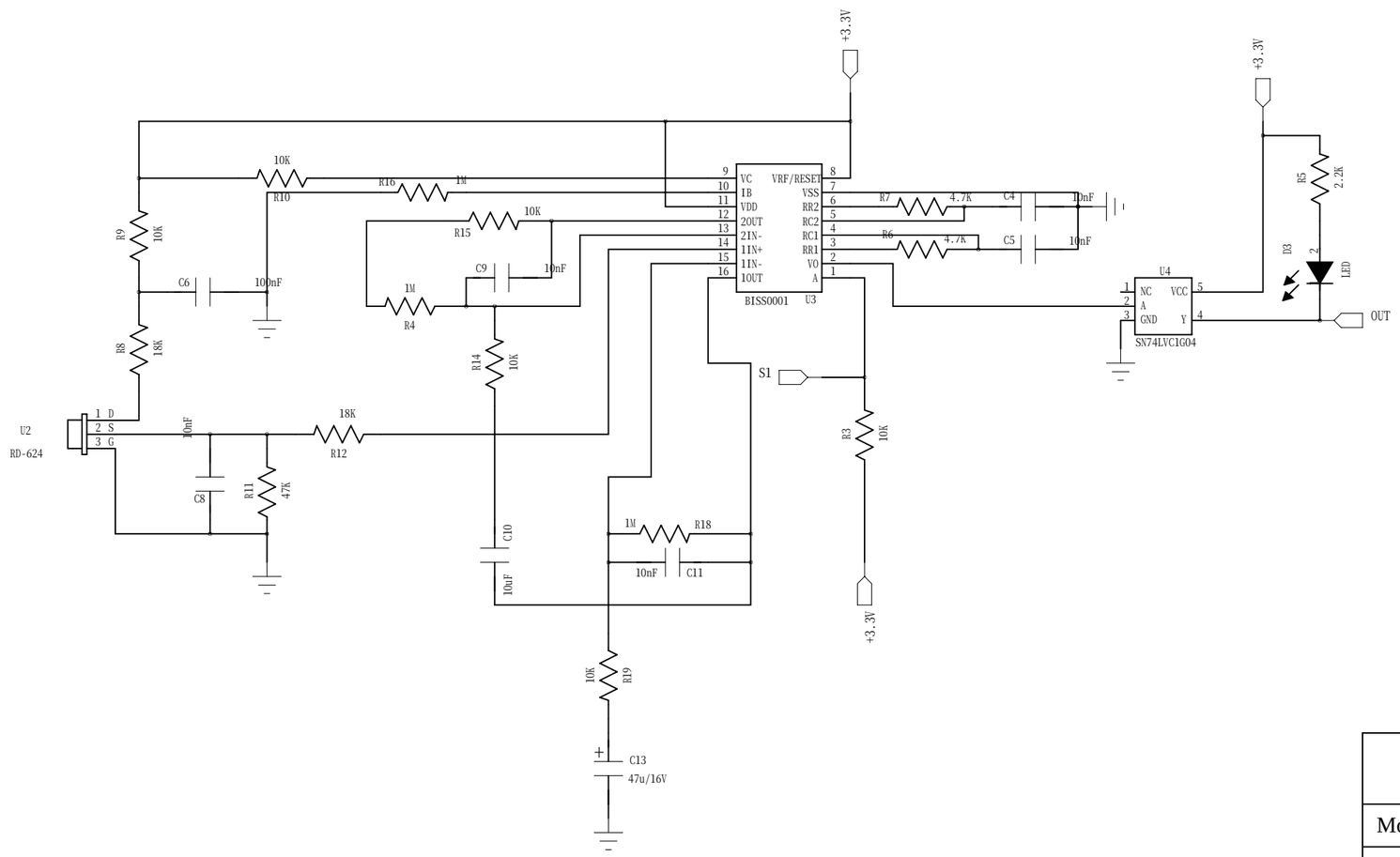

RoboBloq Intelligent Limited			
Model:			
PN:		Rev:	V1.0
Prepared By: Anson	Checked By:	Approved By:	

All right be served by RoboBloq Intelligent Limited.