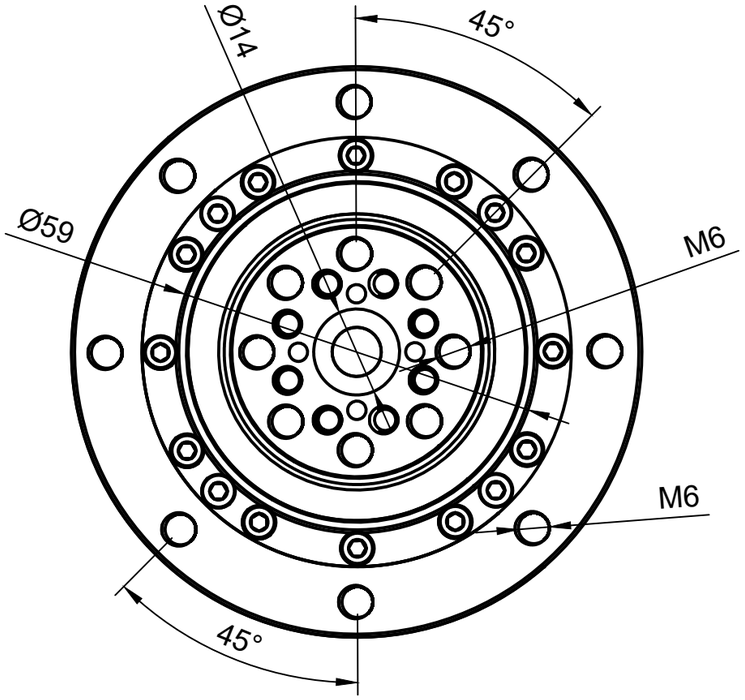

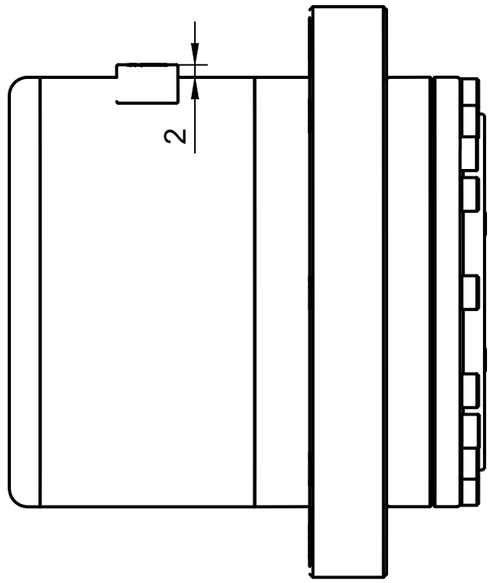

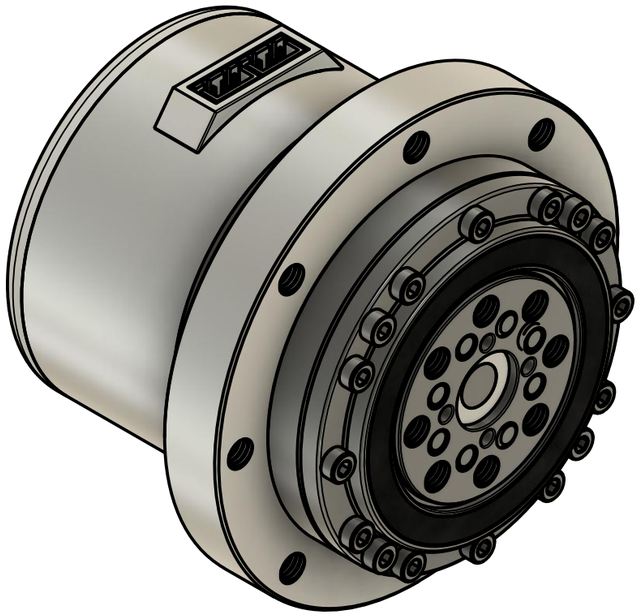

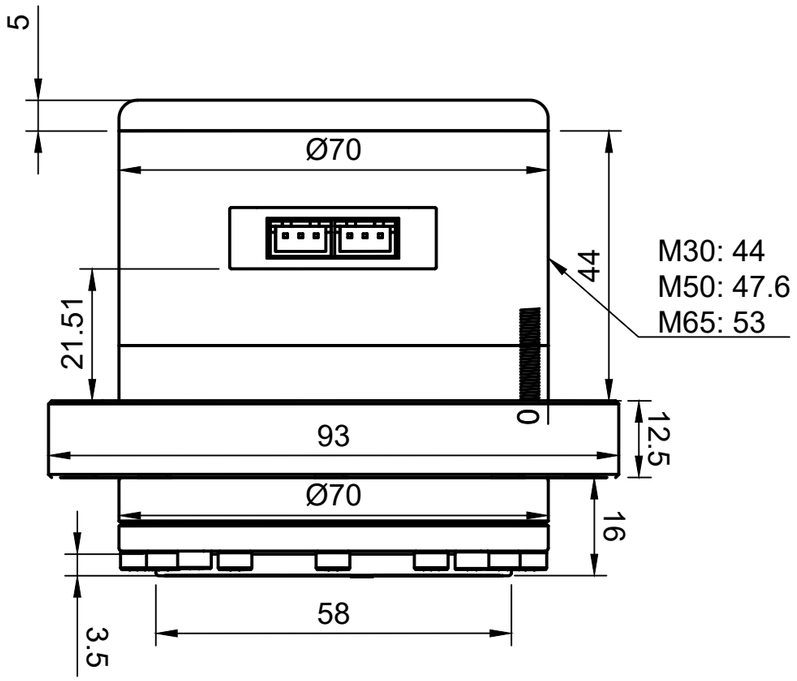

Dept.	Technical reference	Created by	Approved by
Development	MxxCR_v10	Robot Articulation	QA
		Document type	Document status: Approved
		Title: Mercury Mxx CR	DWG No.: 10.1
			Rev.: 10 · Date of issue: 02/02/2021 · Sheet: 1/1