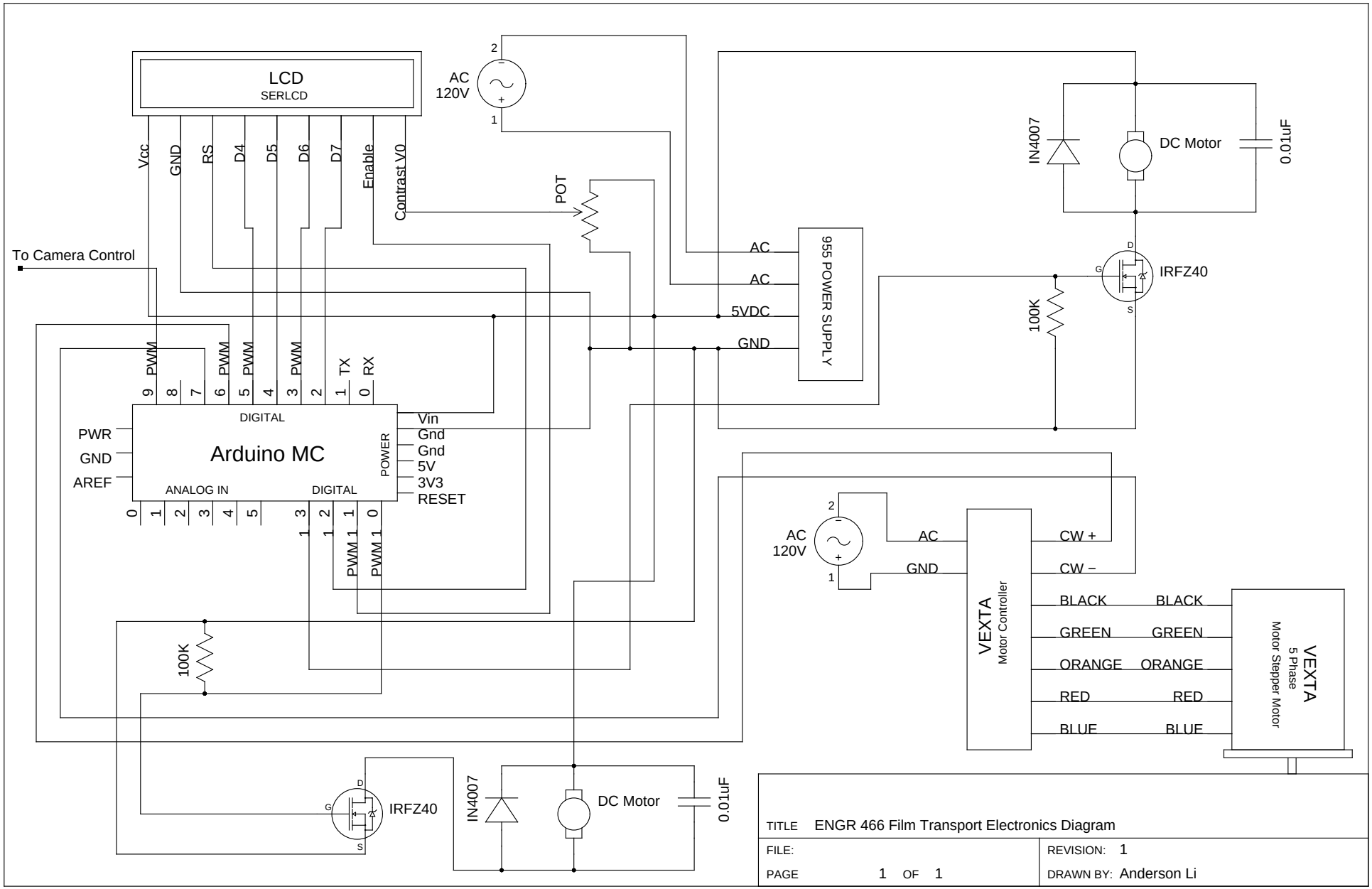
LCD
SERLCD
Vcc
GND
RS
D4
D5
D6
D7
Enable
Contrast V0
AC
120V
POT
To Camera Control
AC
AC
5VDC
GND
955 POWER SUPPLY
IN4007
DC Motor
0.01uF
IRFZ40
100K
PWM
TX
RX
DIGITAL
Arduino MC
PWR
GND
AREF
ANALOG IN
DIGITAL
POWER
Vin
Gnd
Gnd
5V
3V3
RESET
PWM 1
AC
120V
AC
GND
VEXTA
Motor Controller
CW +
CW −
BLACK
GREEN
ORANGE
RED
BLUE
VEXTA
5 Phase
Motor Stepper Motor
IRFZ40
IN4007
DC Motor
0.01uF
TITLE ENGR 466 Film Transport Electronics Diagram
FILE:
REVISION: 1
PAGE 1 OF 1
DRAWN BY: Anderson Li