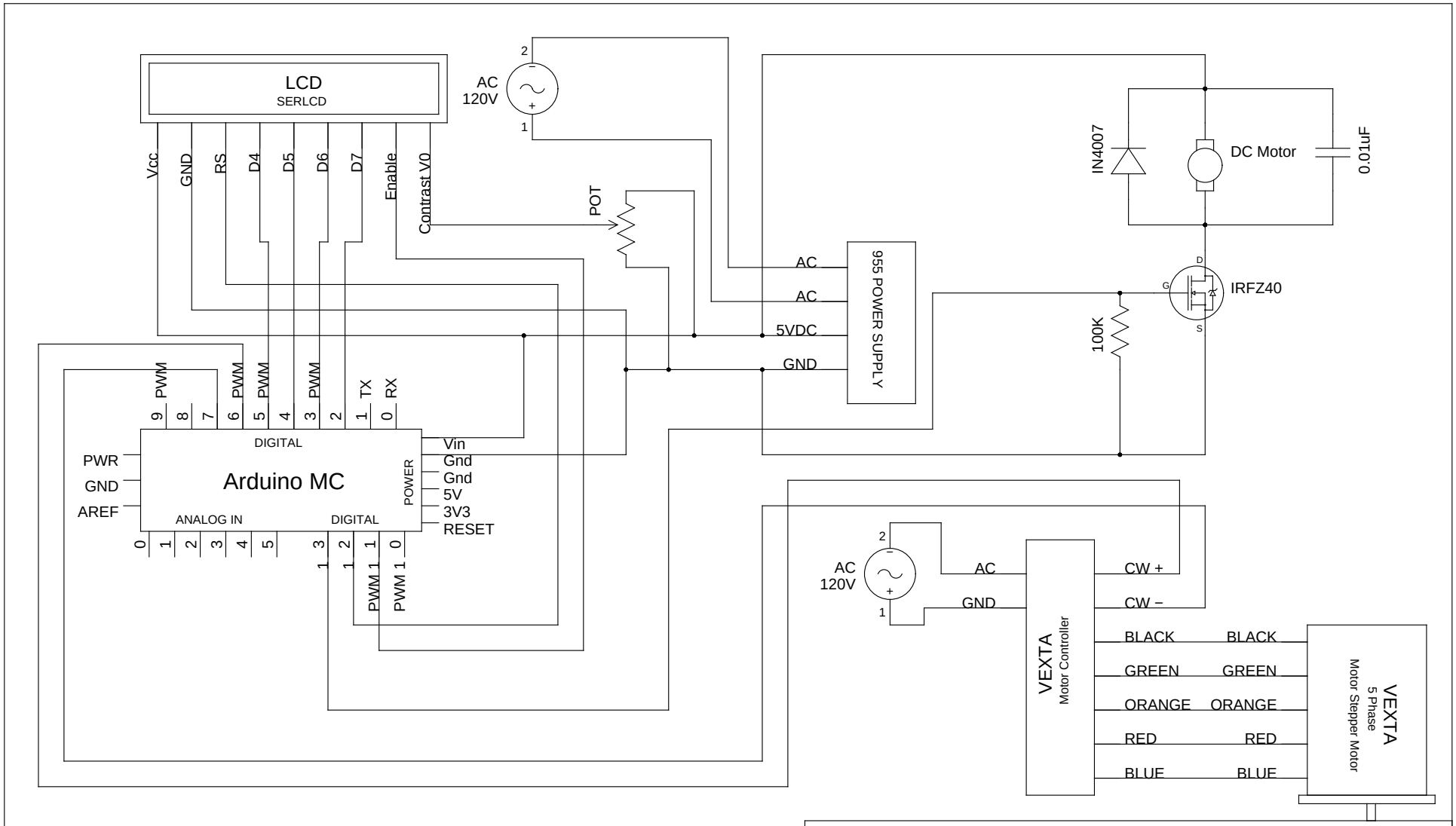

TITLE ENGR 466 Film Transport Electronics Diagram	
FILE:	REVISION: 1
PAGE 1 OF 1	DRAWN BY: Anderson Li