Introduction to Intel x86 Assembly- Architecture and Common Instructions

Updated slides 2021/2022

Slides derived from content made by Xeno Kovah – 2009/2010

xkovah at gmail

All materials is licensed under a Creative Commons “Share Alike” license.

- http://creativecommons.org/licenses/by-sa/3.0/

You are free:

to Share — to copy, distribute and transmit the work

to Remix — to adapt the work

Under the following conditions:

Attribution — You must attribute the work in the manner specified by the author or licensor (but not in any way that suggests that they endorse you or your use of the work).

Share Alike — If you alter, transform, or build upon this work, you may distribute the resulting work only under the same, similar or a compatible license.

About the Class

- The intent of this class is to expose you to the most commonly generated X86 assembly instructions.
- Ideally, by the end of this training, we'll have the required background to delve deeper into areas which may have seemed daunting previously.
- Even more ideally, we will get a JV CTF team out of this!
- Topics we'll cover
  - 32 bit instructions/hardware
  - Implementation of a Stack
  - Common tools for analyzing and debugging binaries
  - How to write your own assembly programs

Agenda

- Week 1 - Part 1 - Architecture Introduction and Common Instructions
- Week 2 - Part 2 – Writing, Compiling and Analyzing x86
- Week 3 - Part 3 - More Instructions

Miss Alaineous

- Questions: Ask 'em if you got 'em
  - If you fall behind and get lost and try to tough it out until you understand, it's more likely that you will stay lost, so ask questions ASAP.
  - My favorite thing is getting interrupted with questions (HONESTLY)
- Browsing the web and/or checking email during class is a good way to get lost ;)
- It's called x86 because of the progression of Intel chips from 8086, 80186, 80286, etc. I just had to get that out of the way. :)

What you're going to learn

```
#include <stdio.h>
int main(){
    printf(“Hello World!\n”);
    return 0x1234;
}
```

Is the same as…

```
.text:00401730 main
.text:00401730                 push    ebp
.text:00401731                 mov     ebp, esp
.text:00401733                 push    offset aHelloWorld ; "Hello world\n"
.text:00401738                 call    ds:__imp__printf
.text:0040173E                 add     esp, 4
.text:00401741                 mov     eax, 1234h
.text:00401746                 pop     ebp
.text:00401747                 retn
```

Windows Visual C++ 2005, /GS (buffer overflow protection) option turned off
Disassembled with IDA Pro 4.9 Free Version

Is the same as…

```
0000000000001149 <main>:
    1149:       f3 0f 1e fa             endbr64
    114d:       55                      push   %rbp
    114e:       48 89 e5                mov    %rsp,%rbp
    1151:       48 8d 3d ac 0e 00 00    lea    0xeac(%rip),%rdi
    1158:       e8 f3 fe ff ff          callq  1050 <puts@plt>
    115d:       b8 34 12 00 00          mov    $0x1234,%eax
    1162:       5d                      pop    %rbp
    1163:       c3                      retq
    1164:       66 2e 0f 1f 84 00 00    nopw   %cs:0x0(%rax,%rax,1)
    116b:       00 00 00
    116e:       66 90                   xchg   %ax,%ax
```

Ubuntu 20.04, gcc version 9.3.0
Disassembled with “objdump -d”

Is the same as…

```
_main:
0000000100003f50    pushq    %rbp
0000000100003f51    movq    %rsp, %rbp
0000000100003f54    subq    $0x10, %rsp
0000000100003f58    movl    $0x0, -0x4(%rbp)
0000000100003f5f    leaq    0x38(%rip), %rdi                ## literal
pool for: "Hello World\n"
0000000100003f66    movb    $0x0, %al
0000000100003f68    callq    0x100003f7e                     ## symbol
stub for: _printf
0000000100003f6d    movl    $0x1234, %ecx                   ## imm =
   0x1234
0000000100003f72    movl    %eax, -0x8(%rbp)
0000000100003f75    movl    %ecx, %eax
0000000100003f77    addq    $0x10, %rsp
0000000100003f7b    popq    %rbp
0000000100003f7c    retq
```

Mac OS 11.6, clang 12.0.5
Disassembled from command line with “otool -tV”

But it all boils down to…

```
.text:00401000 main
.text:00401000        push    offset aHelloWorld ; "Hello world\n"
.text:00401005        call    ds:__imp__printf
.text:0040100B        pop     ecx
.text:0040100C        mov     eax, 1234h
.text:00401011        retn
```

Windows Visual C++ 2005, /GS (buffer overflow protection) option turned off
Optimize for minimum size (/O1) turned on
Disassembled with IDA Pro 4.9 Free Version

Take Inventory!

- By one measure, only 14 assembly instructions account for 90% of code!
  - http://www.blackhat.com/presentations/bh-usa-06/BH-US-06-Bilar.pdf
- I think that knowing about 20-30 (not counting variations) is good enough that you will have to check the manual very infrequently
- You've already seen 11 instructions, just in the hello world variations!

Refresher - Data Types

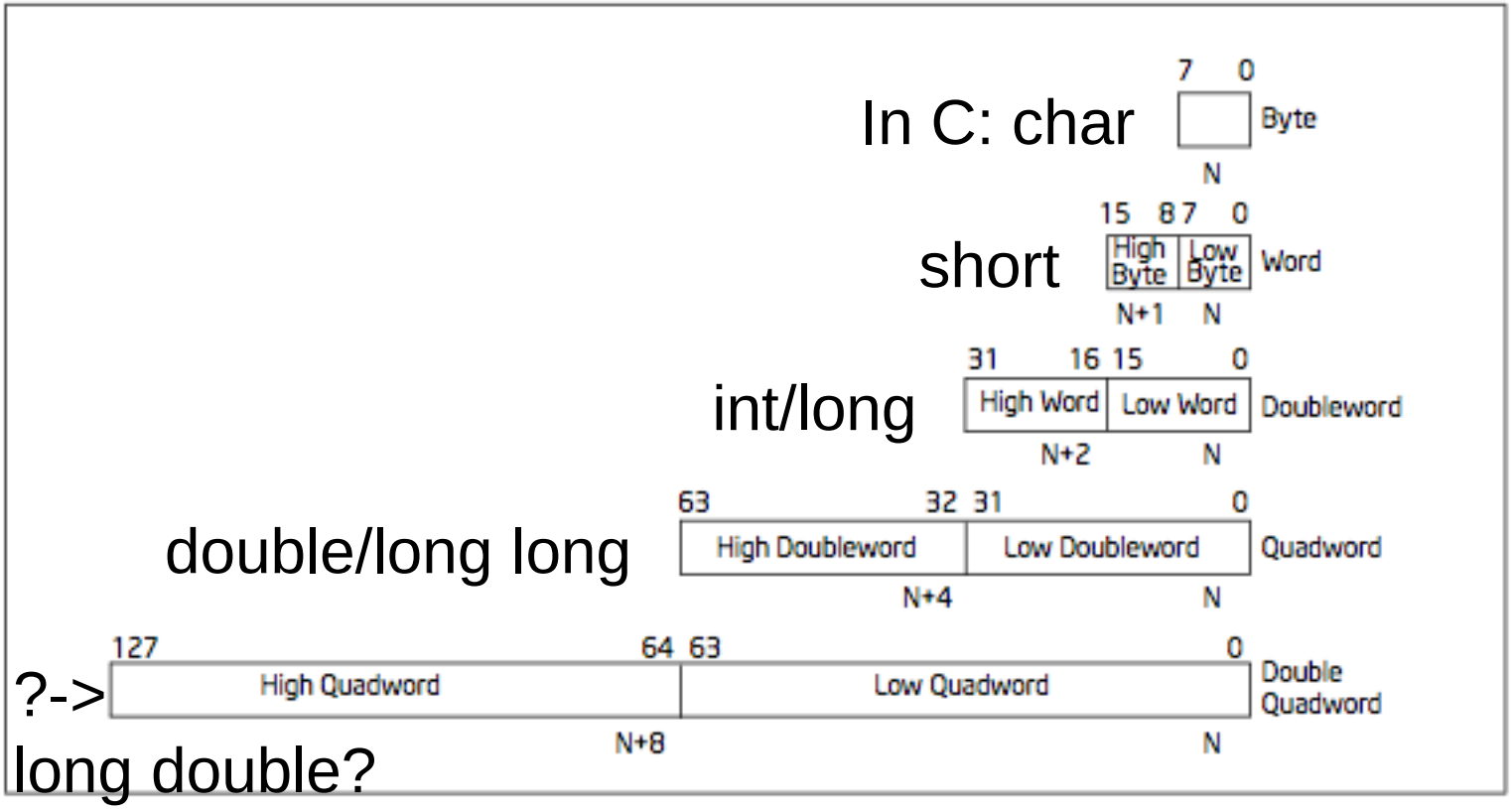

Figure 4-1. Fundamental Data Types

Refresher - Alt. Radices Decimal, Binary, Hexidecimal

If you don't know this, you must memorize tonight

Decimal (base 10)	Binary (base 2)	Hex (base 16)
00	0000b	0x00
01	0001b	0x01
02	0010b	0x02
03	0011b	0x03
04	0100b	0x04
05	0101b	0x05
06	0110b	0x06
07	0111b	0x07
08	1000b	0x08
09	1001b	0x09
10	1010b	0x0A
11	1011b	0x0B
12	1100b	0x0C
13	1101b	0x0D
14	1110b	0x0E
15	1111b	0x0F

Refresher - Negative Numbers

- “one's complement” = flip all bits. 0->1, 1->0
- “two's complement” = one's complement + 1
- Negative numbers are defined as the “two's complement” of the positive number

Number	One's Comp.	Two's Comp. (negative)
00000001b : 0x01	11111110b : 0xFE	11111111b : 0xFF : -1
00000100b : 0x04	11111011b : 0xFB	11111100b : 0xFC : -4
00011010b : 0x1A	11100101b : 0xE5	11100110b : 0xE6 : -26
?	?	10110000b : 0xB0 : -?

- 0x01 to 0x7F positive byte, 0x80 to 0xFF negative byte
- 0x00000001 to 0x7FFFFFFF positive dword
- 0x80000000 to 0xFFFFFFFF negative dword

Architecture - CISC vs. RISC

- Intel is CISC - Complex Instruction Set Computer
  - Many very special purpose instructions that you will never see, and a given compiler may never use - just need to know how to use the manual
  - Variable-length instructions, between 1 and 16(?) bytes long.
    - 16 is max len in theory, I don't know if it can happen in practice
- Other major architectures are typically RISC - Reduced Instruction Set Computer
  - Typically more registers, less and fixed-size instructions
  - Examples: PowerPC, ARM, SPARC, MIPS

Architecture - Endian

- Endianness comes from Jonathan Swift's *Gulliver's Travels*. It doesn't matter which way you eat your eggs :)
- Little Endian - 0x12345678 stored in RAM “little end” first. The least significant byte of a word or larger is stored in the lowest address. E.g. 0x78563412
  - Intel is Little Endian
- Big Endian - 0x12345678 stored as is.
  - Network traffic is Big Endian
  - Most everyone else you've heard of (PowerPC, ARM, SPARC, MIPS) is either Big Endian by default or can be configured as either (Bi-Endian)

Endianess pictures

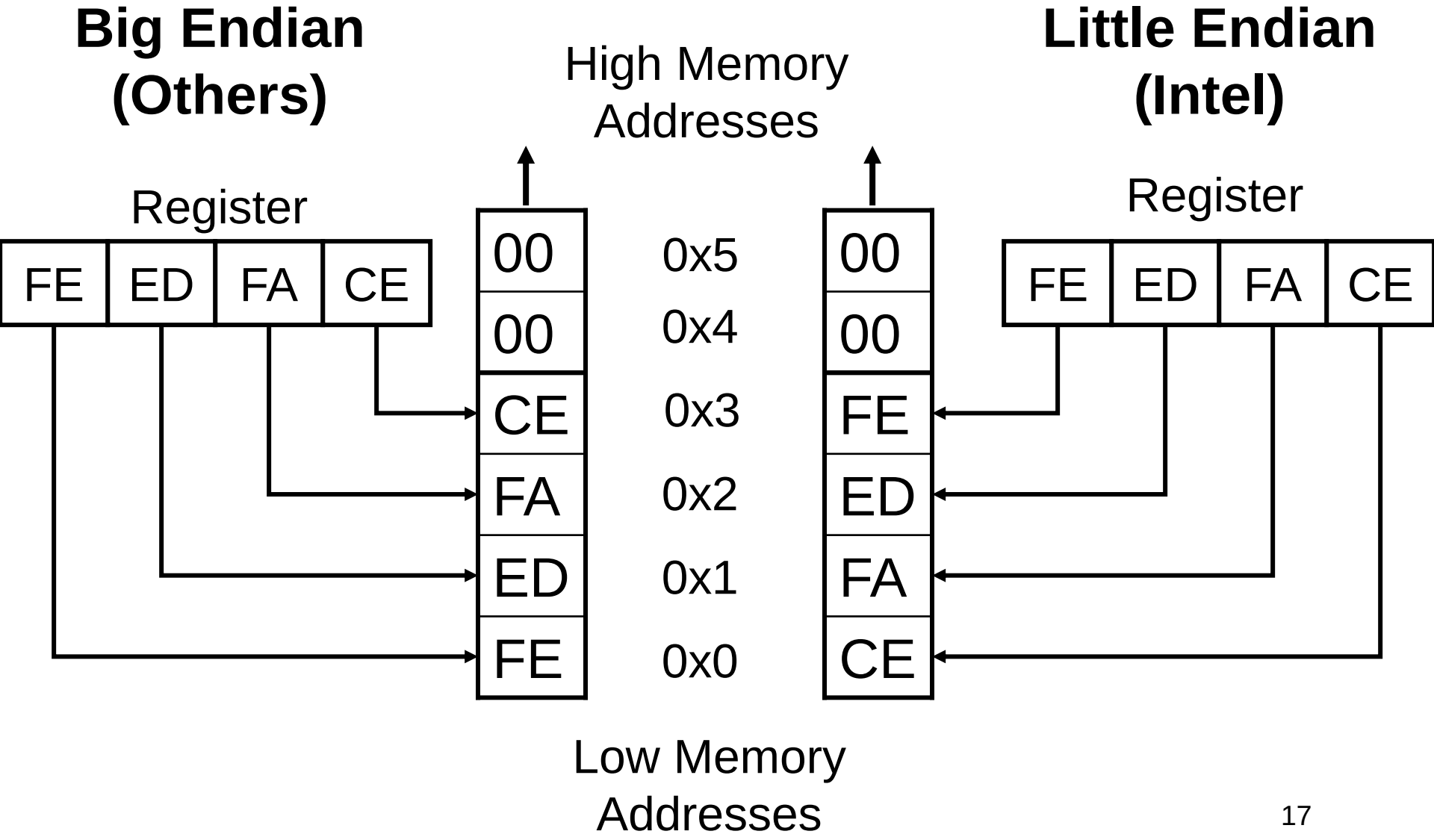

Architecture - Registers

- Registers are small memory storage areas built into the processor (still volatile memory)
- 8 “general purpose” registers + the instruction pointer which points at the next instruction to execute
  - But two of the 8 are not that general
- On x86-32, registers are 32 bits long
- On x86-64, they're 64 bits

Architecture - Register Conventions 1

- These are Intel's suggestions to compiler developers (and assembly handcoders). Registers don't have to be used these ways, but if you see them being used like this, you'll know why. But I simplified some descriptions. I also color coded as **GREEN** for the ones which we will actually see in *this* class (as opposed to future ones), and **RED** for not.
- **EAX** - Stores function return values
- **EBX** - Base pointer to the data section
- **ECX** - Counter for string and loop operations
- **EDX** - I/O pointer

Architecture - Registers Conventions 2

- **ESI** - Source pointer for string operations
- **EDI** - Destination pointer for string operations
- **ESP** - Stack pointer
- **EBP** - Stack frame base pointer
- **EIP** - Pointer to next instruction to execute (“instruction pointer”)

Architecture - Registers Conventions 3

- Caller-save registers - eax, edx, ecx
  - If the caller has anything in the registers that it cares about, the caller is in charge of saving the value before a call to a subroutine, and restoring the value after the call returns
  - Put another way - the callee can (and is highly likely to) modify values in caller-save registers
- Callee-save registers - ebp, ebx, esi, edi
  - If the callee needs to use more registers than are saved by the caller, the callee is responsible for making sure the values are stored/restored
  - Put another way - the callee must be a good citizen and not modify registers which the caller didn't save, unless the callee itself saves and restores the existing values

Architecture - Registers Conventions 4

- There are some major differences between X86 and X86-(X64).
  - Registers are referred to as rax, rdx, rsp, rsi, rip, rbp and so on
    - Basically, replace the “e” with an “r”
  - Registers store 64 bit values instead of 32 bit values

Architecture - Registers - 8/16/32 bit addressing 1

8/16/32bit general purpose registers																															
31	30	29	28	27	26	25	24	23	22	21	20	19	18	17	16	15	14	13	12	11	10	9	8	7	6	5	4	3	2	1	0
EAX																															
reserved																AX															
																AH								AL							
ECX																															
reserved																CX															
																CH								CL							
EDX																															
reserved																DX															
																DH								DL							
EBX																															
reserved																BX															
																BH								BL							

http://www.sandpile.org/ia32/reg.htm

Architecture - Registers - 8/16/32 bit addressing 2

16/32bit general purpose registers																															
31	30	29	28	27	26	25	24	23	22	21	20	19	18	17	16	15	14	13	12	11	10	9	8	7	6	5	4	3	2	1	0
ESP																															
reserved																SP															
EBP																															
reserved																BP															
ESI																															
reserved																SI															
EDI																															
reserved																DI															
EIP																															
reserved																IP															

http://www.sandpile.org/ia32/reg.htm

Architecture - EFLAGS

- EFLAGS register holds many single bit flags. Will only ask you to remember the following for now.
  - Zero Flag (ZF) - Set if the result of some instruction is zero; cleared otherwise.
  - Sign Flag (SF) - Set equal to the most-significant bit of the result, which is the sign bit of a signed integer. (0 indicates a positive value and 1 indicates a negative value.)

Intel Vol 1 Sec 3.4.3 - page 3-20

Your first x86 instruction: NOP

- NOP - No Operation! No registers, no values, no nothin'!
- Just there to pad/align bytes, or to delay time
- Bad guys use it to make simple exploits more reliable. But that's another portion of the training ;)

The Stack

- The stack is a conceptual area of main memory (RAM) which is designated by the OS when a program is started.
  - Different OS start it at different addresses by convention
- A stack is a Last-In-First-Out (LIFO/FILO) data structure where data is "pushed" on to the top of the stack and "popped" off the top.
- By convention the stack grows toward lower memory addresses. Adding something to the stack means the top of the stack is now at a lower memory address.

The Stack 2

- As already mentioned, esp points to the top of the stack, the lowest address which is being used
  - While data will exist at addresses beyond the top of the stack, it is considered undefined
- The stack keeps track of which functions were called before the current one, it holds local variables and is frequently used to pass arguments to the next function to be called.
- Each function gets their own section of the stack, called the function’s stack frame.
- A firm understanding of what is happening on the stack is *__essential__* to understanding a program's operation and some of the exploit techniques we are going to learn.

PUSH - Push Word, Doubleword or Quadword onto the Stack

- For our purposes, it will always be a DWORD (4 bytes).
  - Can either be an immediate (a numeric constant), or the value in a register
- The push instruction automatically decrements the stack pointer, esp, by 4.

Registers Before

eax	0x00000003
esp	0x0012FF8C

push eax

Registers After

eax	0x00000003
esp	0x0012FF88

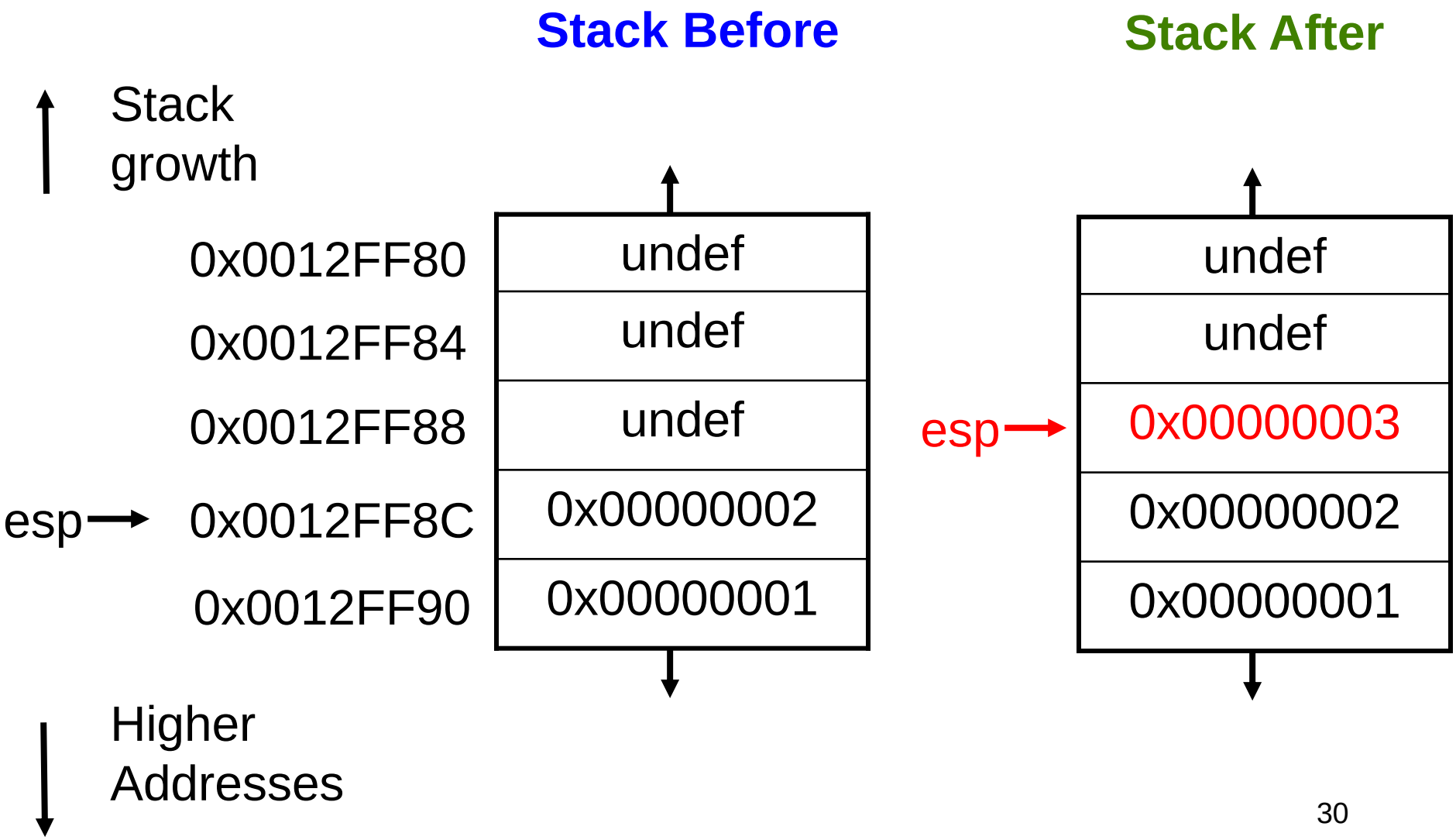

3

POP- Pop a Value from the Stack

- Take a DWORD off the stack, put it in a register, and increment esp by 4

Book p. 120

pop eax

Registers Before

eax	0xFFFFFFFF
esp	0x0012FF88

Registers After

eax	0x00000003
esp	0x0012FF8C

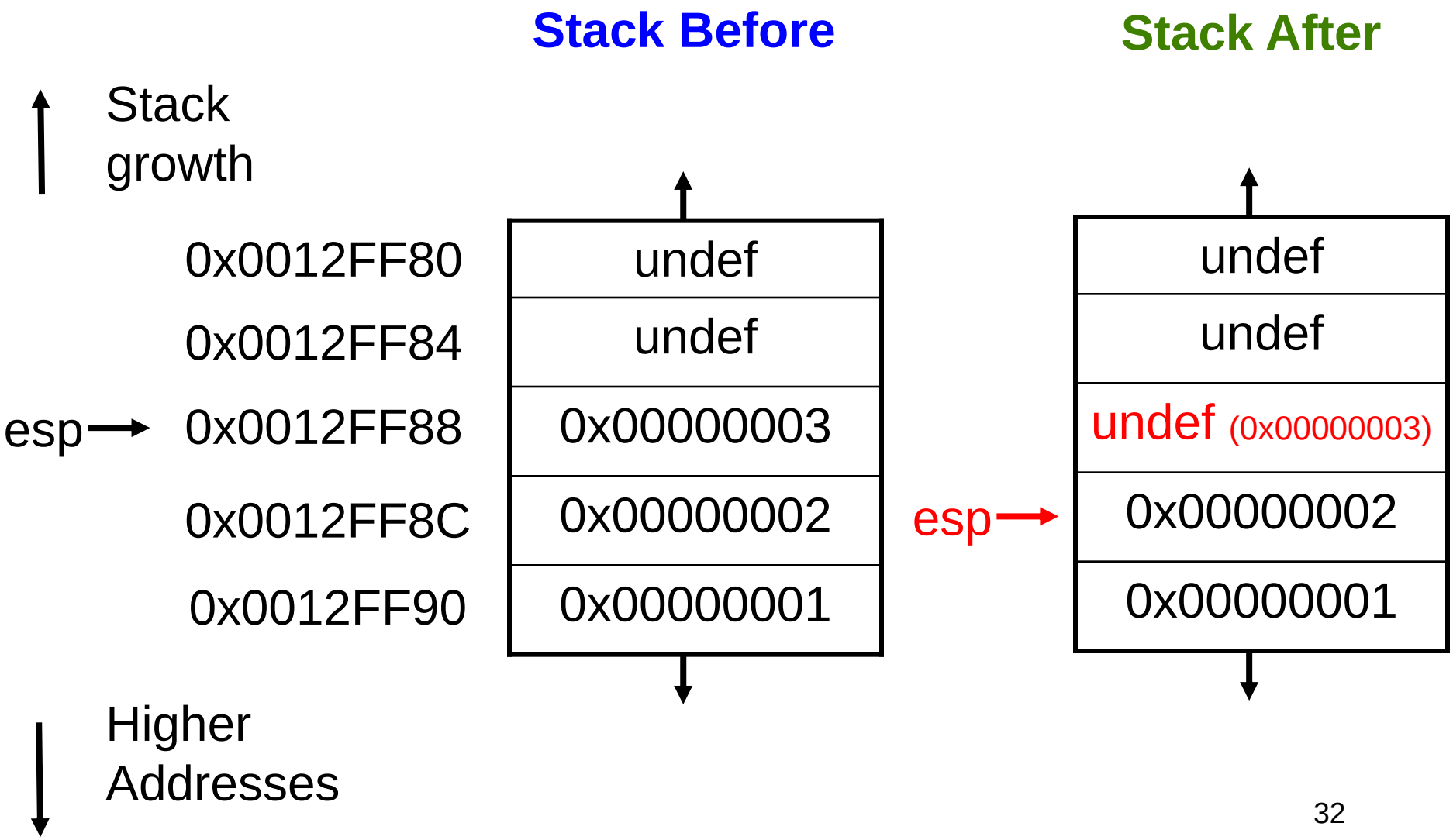

Calling Conventions

- How code calls a subroutine is compiler-dependent and configurable. But there are a few conventions.
- We will only deal with the “cdecl” and “stdcall” conventions.
- More info at
  - http://en.wikipedia.org/wiki/X86_calling_conventions
  - http://www.programmersheaven.com/2/Calling-conventions

Calling Conventions - cdecl

- “C declaration” - most common calling convention
- Function parameters pushed onto stack right to left
- Saves the old stack frame pointer and sets up a new stack frame
- eax or edx:eax returns the result for primitive data types
- Caller is responsible for cleaning up the stack

Calling Conventions - stdcall

- I typically only see this convention used by Microsoft C++ code - e.g. Win32 API
- Function parameters pushed onto stack right to left
- Saves the old stack frame pointer and sets up a new stack frame
- eax or edx:eax returns the result for primitive data types
- Callee responsible for cleaning up any stack parameters it takes
- Aside: typical MS, “If I call my new way of doing stuff 'standard' it must be true!”

Calling Conventions

- NOTE: The calling convention changes between x86 and x64
  - One example: Instead of passing arguments via the stack they are passed in registers.
    - Arguments 1-4 are passed via registers rcx, rdx, r8 and r9, the remainder are passed on the stack
  - If you are interested in learning more about the differences between x86 and x64, check out these resources! We will need to know these differences for later.
    - https://en.wikipedia.org/wiki/X86_calling_conventions
    - https://geidav.wordpress.com/tag/x86-and-x64-calling-conventions/

CALL - Call Procedure

- CALL's job is to transfer control to a different function, in a way that control can later be resumed where it left off
- First it pushes the address of the next instruction onto the stack
  - For use by RET for when the procedure is done
- Then it changes eip to the address given in the instruction
- Destination address can be specified in multiple ways
  - Absolute address
  - Relative address (relative to the end of the instruction)

RET - Return from Procedure

- Two forms
  - Pop the top of the stack into eip (remember pop increments stack pointer)
    - In this form, the instruction is just written as “ret”
    - Typically used by cdecl functions
  - Pop the top of the stack into eip and add a constant number of bytes to esp
    - In this form, the instruction is written as “ret 0x8”, or “ret 0x20”, etc
    - Typically used by stdcall functions

Are you still with me?

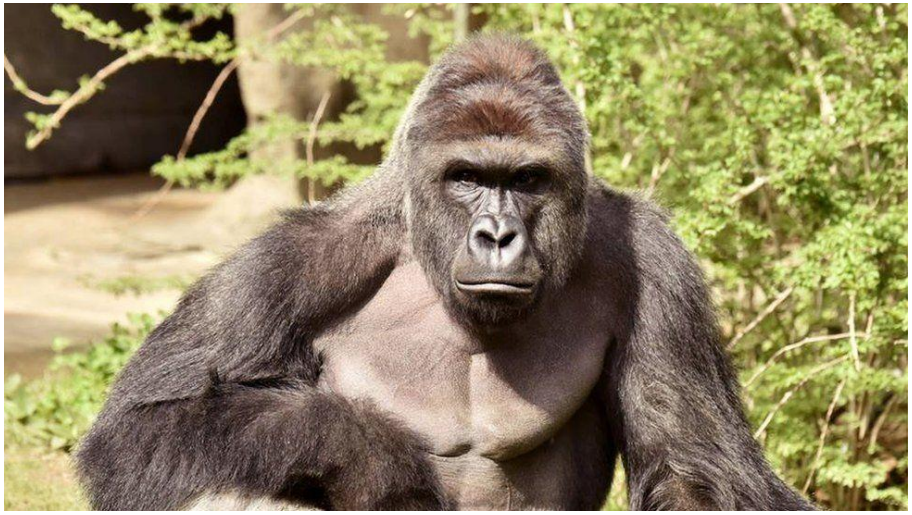

- RIP Harambe

6

MOV - Move

- Can move:
  - register to register
  - memory to register, register to memory
  - immediate to register, immediate to memory
- Never memory to memory!
- Memory addresses are given in r/m32 form talked about later
- mov eax, ebx
  - Move value in stored in register ebx into eax register

"r/m32" Addressing Forms

- Anywhere you see an r/m32 it means it could be taking a value either from a register, or a memory address.
- I'm just calling these “r/m32 forms” because anywhere you see “r/m32” in the manual, the instruction can be a variation of the below forms.
- In Intel syntax, most of the time square brackets [] means to treat the value within as a memory address, and fetch the value at that address (like dereferencing a pointer)
  - mov eax, ebx
  - mov eax, [ebx]
  - mov eax, [ebx+ecx*X] (X=1, 2, 4, 8)
  - mov eax, [ebx+ecx*X+Y] (Y= one byte, 0-255 or 4 bytes, 0-2^32-1)
- Most complicated form is: `[base + index*scale + disp]`

More info: Intel v2a, Section 2.1.5 page 2-4
in particular Tables 2-2 and 2-3

General Stack Frame Operation

We are going to pretend that main() is the very first function being executed in a program. This is what its stack looks like to start with (assuming it has any local variables).

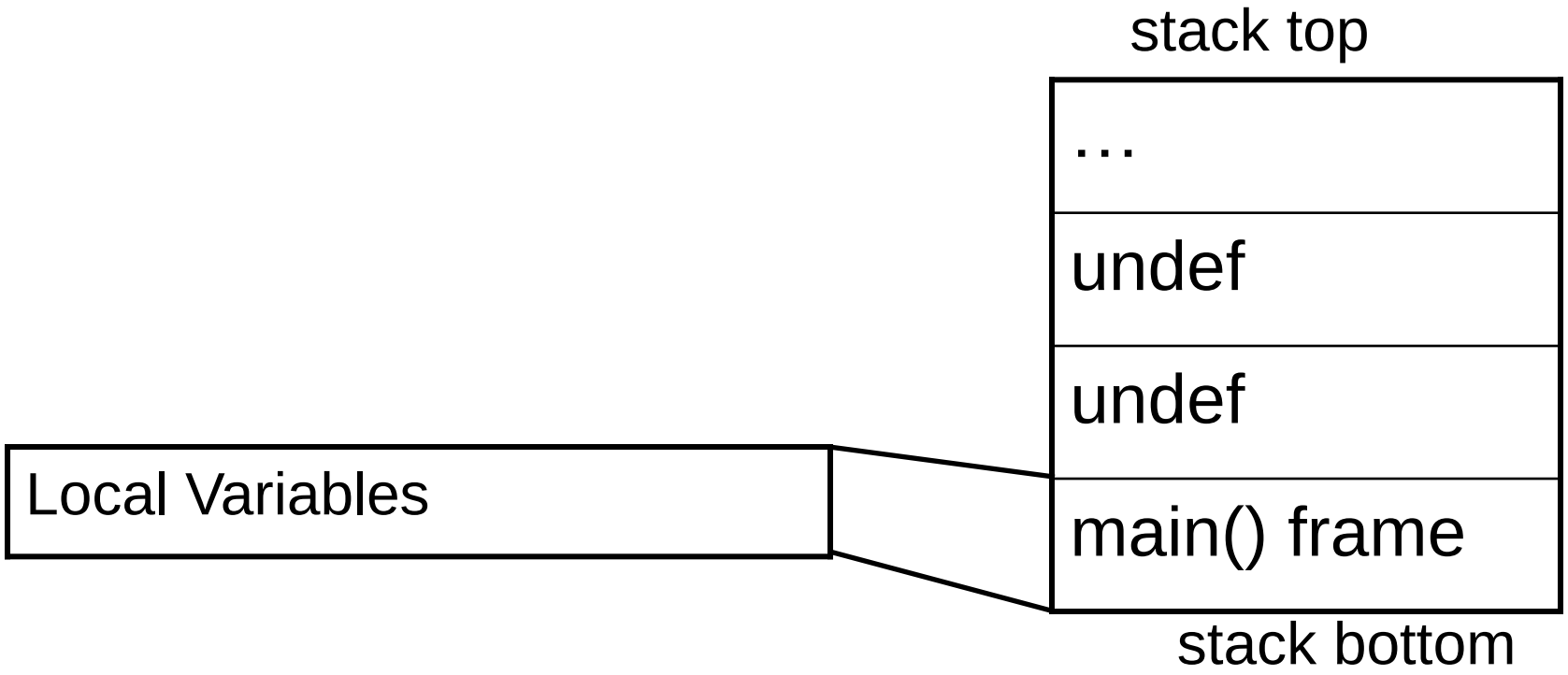

General Stack Frame Operation 2

When main() decides to call a subroutine, main() becomes “the caller”. We will assume main() has some registers it would like to remain the same, so it will save them. We will also assume that the callee function takes some input arguments.

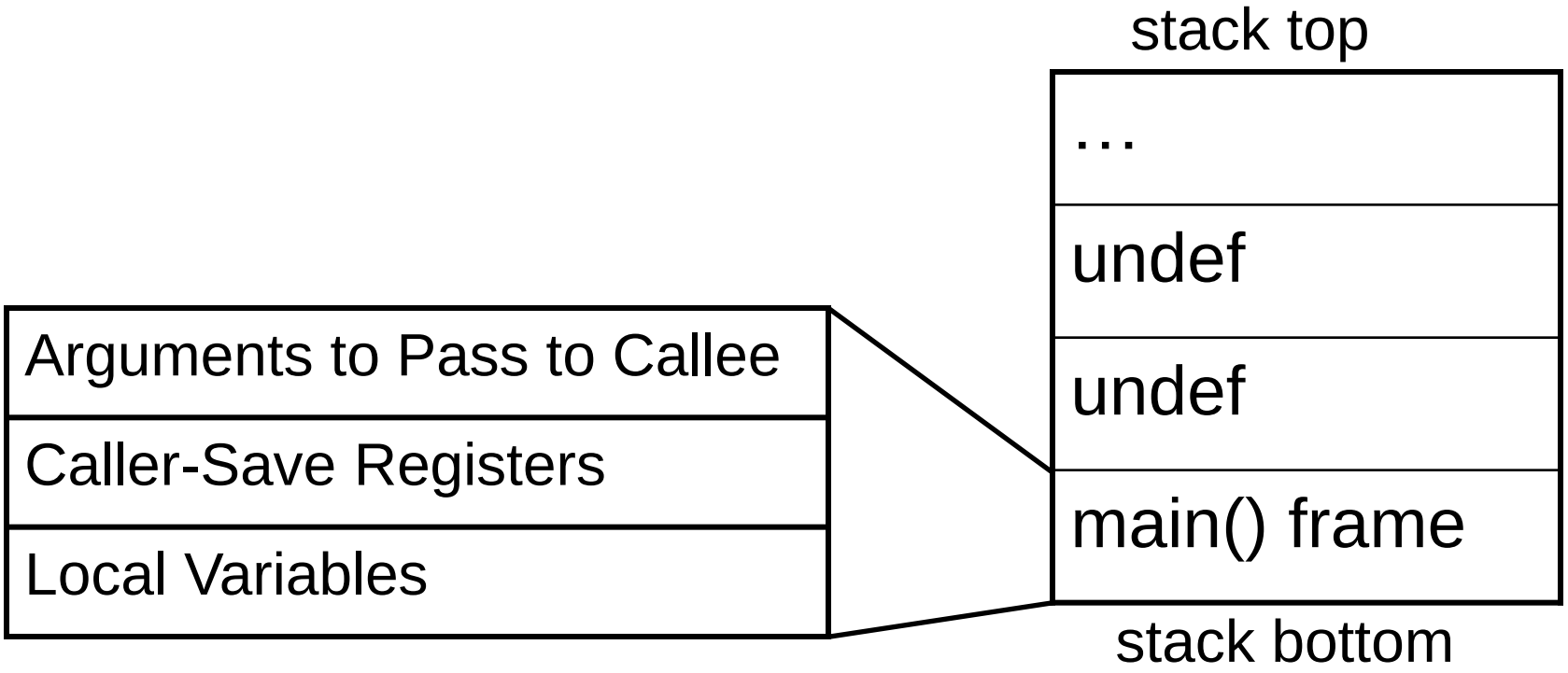

General Stack Frame Operation 3

When main() actually issues the CALL instruction, the return address gets saved onto the stack, and because the next instruction after the call will be the beginning of the called function, we consider the frame to have changed to the callee.

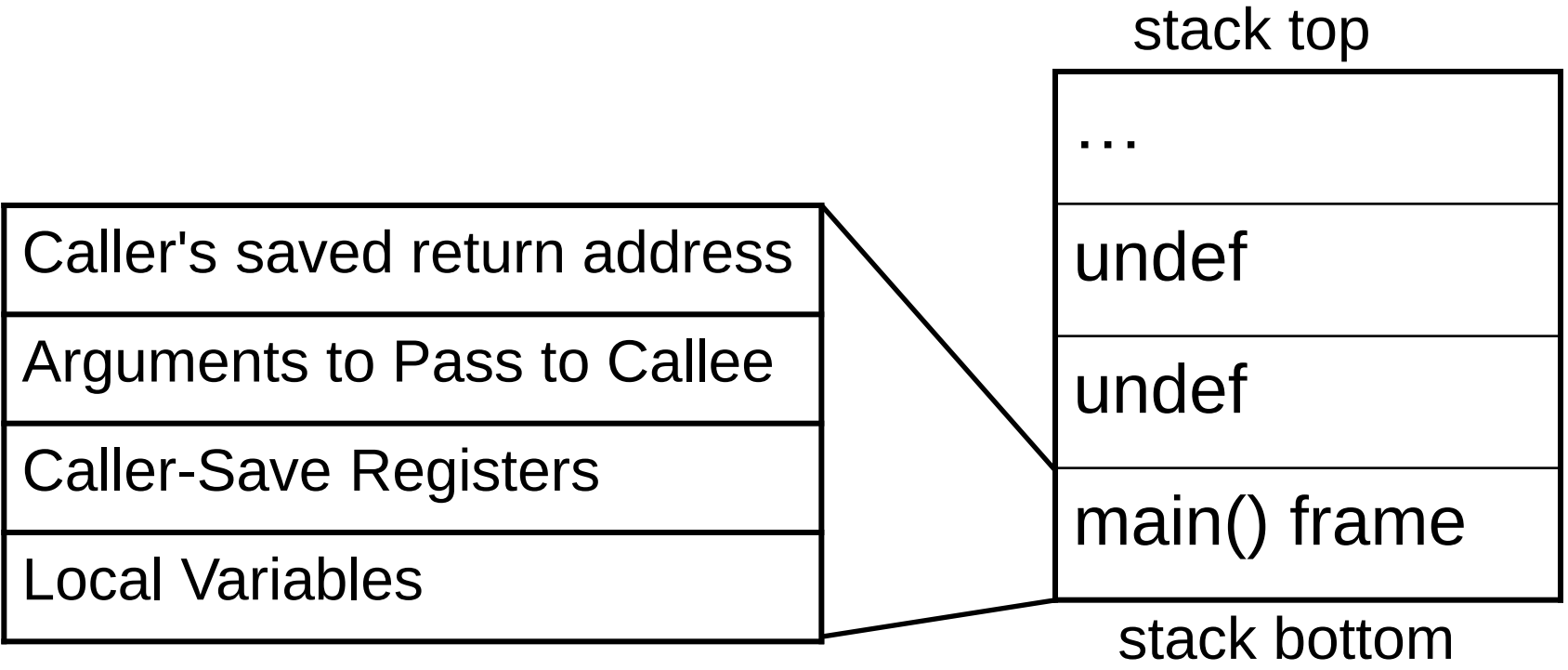

General Stack Frame Operation 4

When foo() starts, the frame pointer (ebp) still points to main()'s frame. So the first thing it does is to save the old frame pointer on the stack and set the new value to point to its own frame.

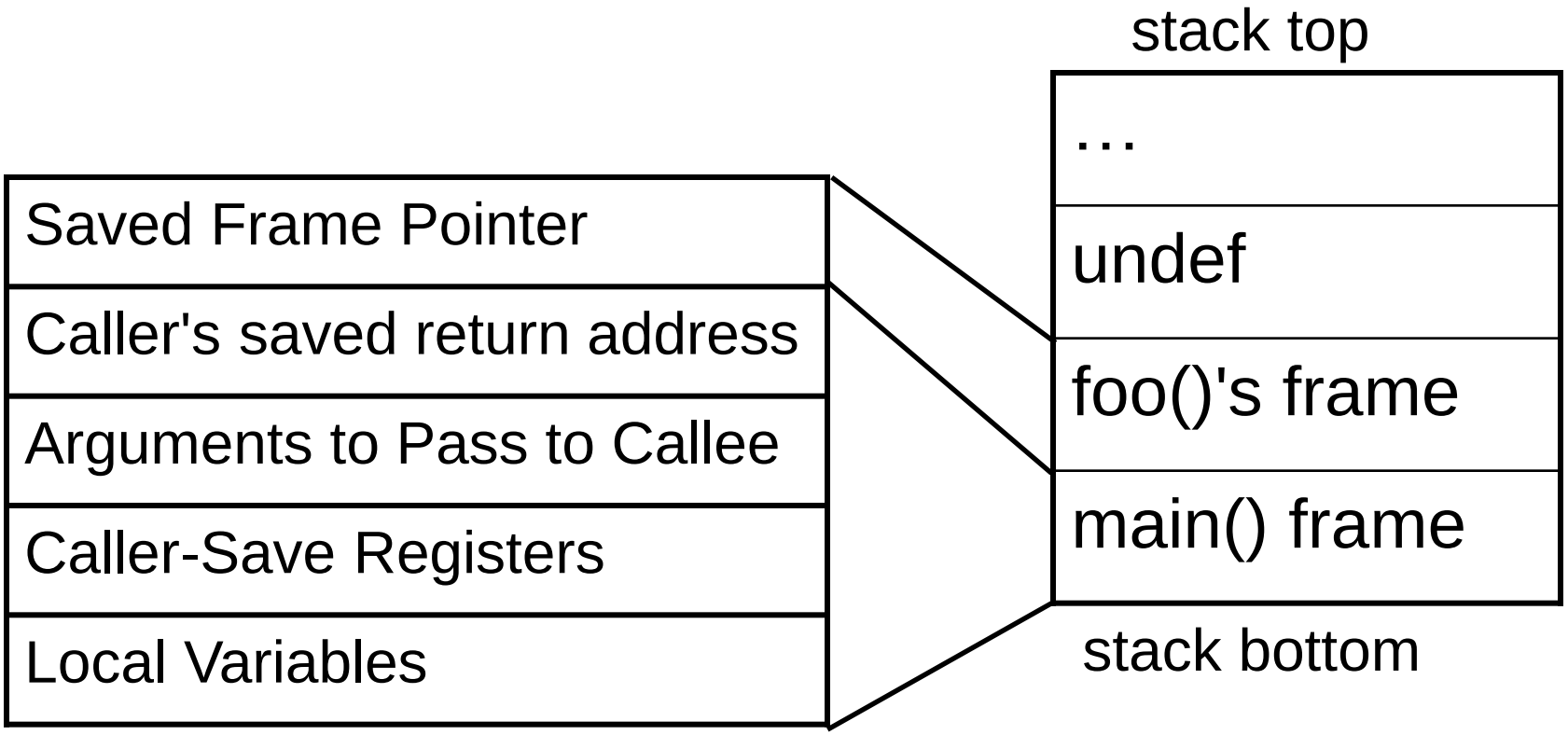

General Stack Frame Operation 5

Next, we'll assume the the callee foo() would like to use all the registers, and must therefore save the callee-save registers. Then it will allocate space for its local variables.

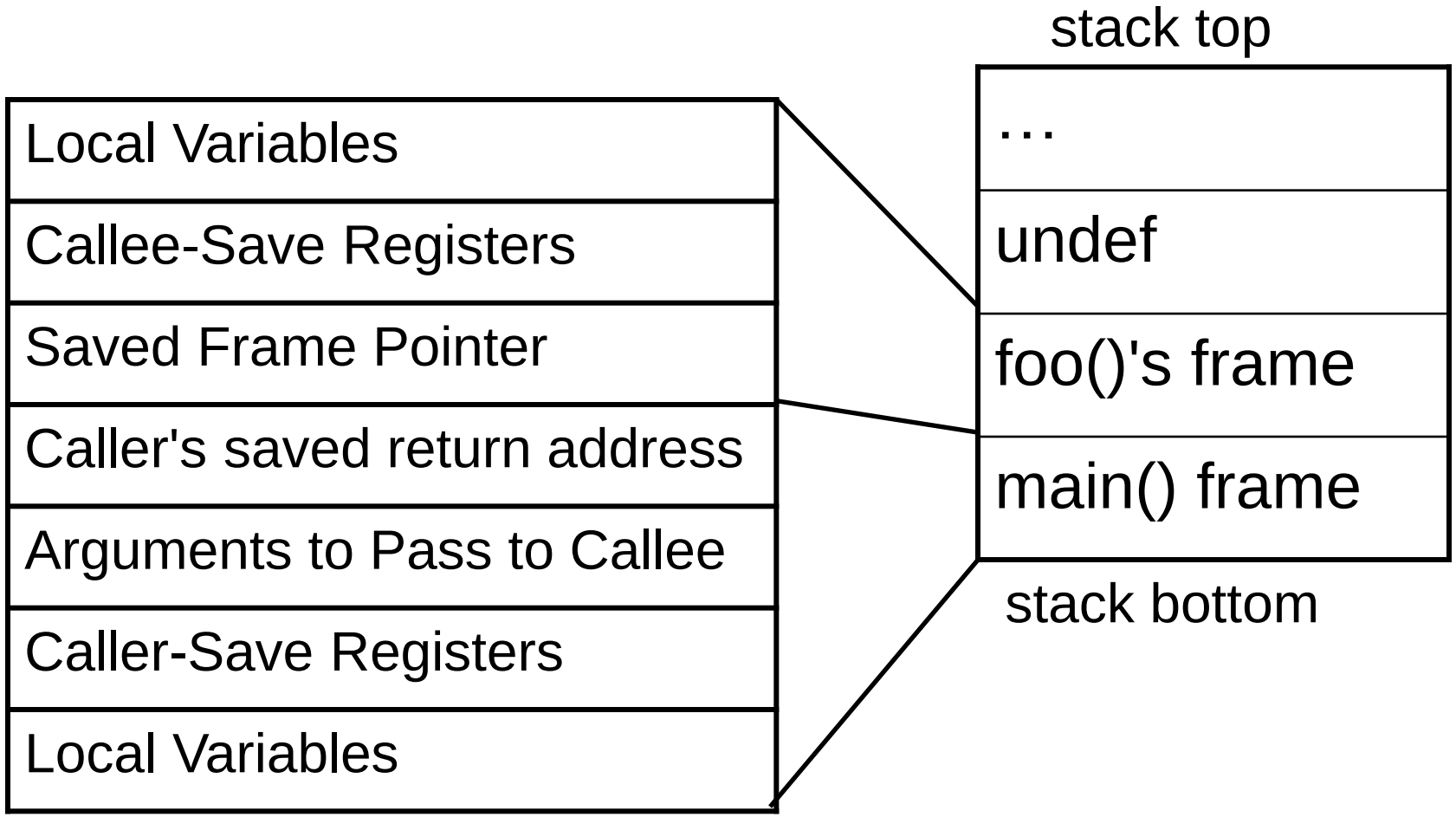

General Stack Frame Operation 6

At this point, foo() decides it wants to call bar(). It is still the callee-of-main(), but it will now be the caller-of-bar. So it saves any caller-save registers that it needs to. It then puts the function arguments on the stack as well.

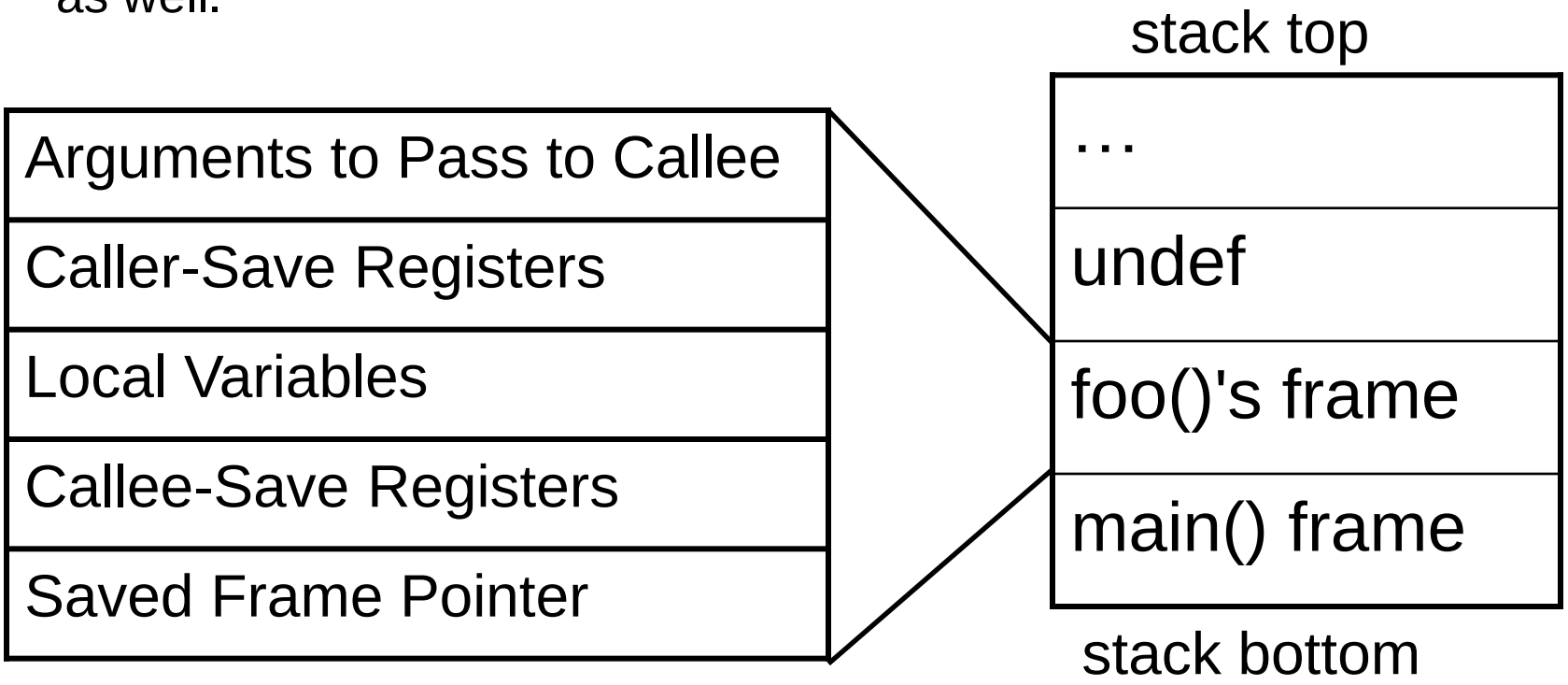

General Stack Frame Layout

Every part of the stack frame is technically optional (that is, you can hand code asm without following the conventions.)
But compilers generate code which uses portions if they are needed.
Which pieces are used can sometimes be manipulated with compiler options. (E.g. omit frame pointers, changing calling convention to pass arguments in registers, etc.)

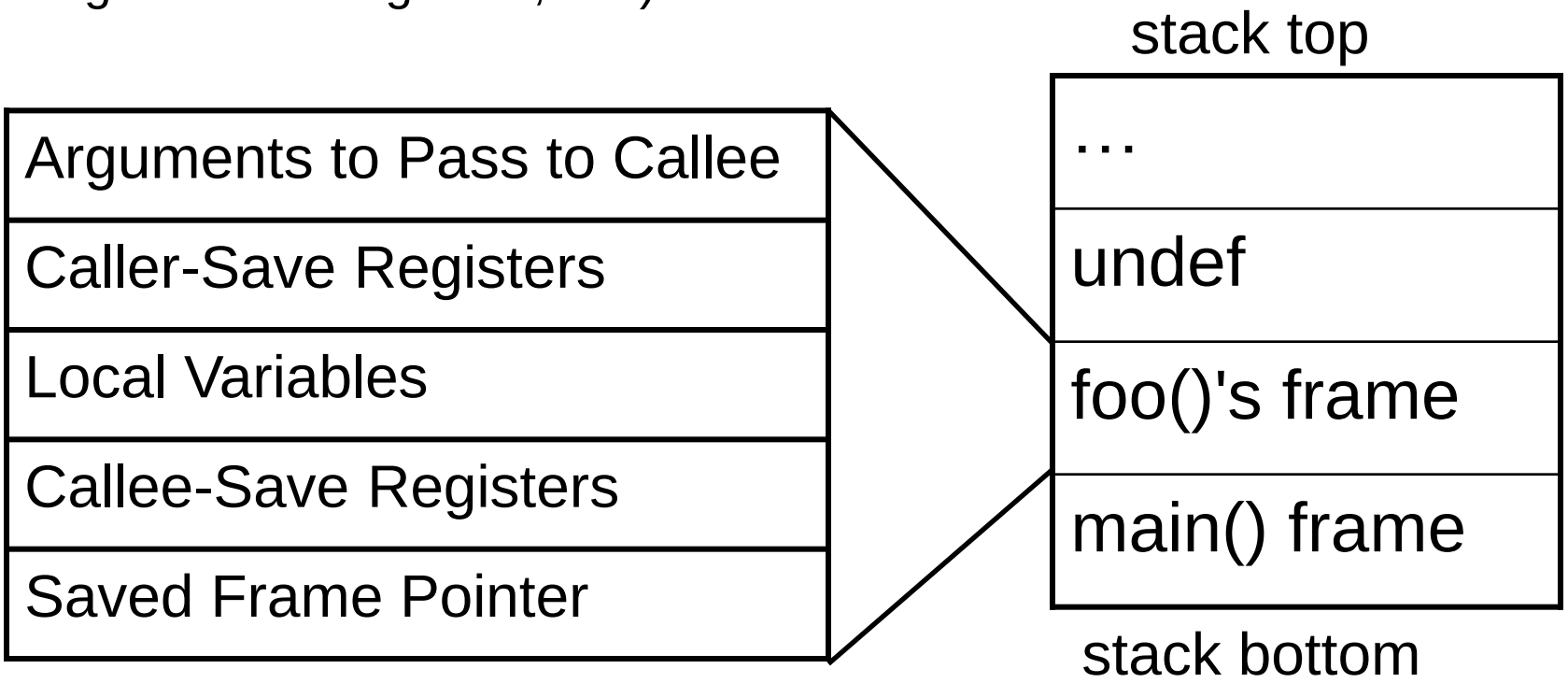

Stack Frames are a Linked List!

The ebp in the current frame points at the saved ebp of the previous frame.

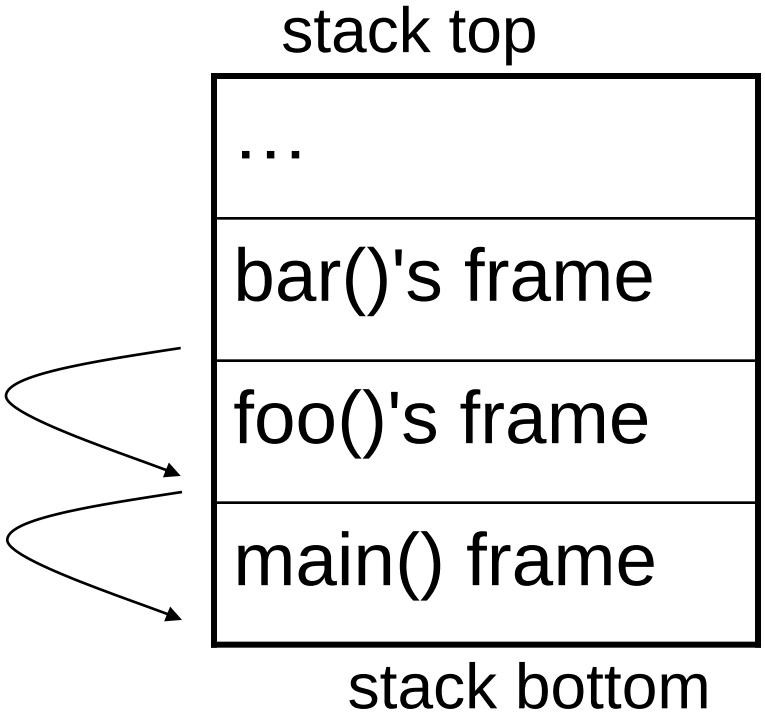

Example1.c

The stack frames in this example will be very simple.
Only saved frame pointer (ebp) and saved return addresses (eip).

```
//Example1 - using the stack
//to call subroutines
//New instructions:
//push, pop, call, ret, mov
int sub(){
    return 0xbeef;
}
int main(){
    sub();
    return 0xf00d;
}
```

```
sub:
00401000  push    ebp
00401001  mov     ebp,esp
00401003  mov     eax,0BEEFh
00401008  pop     ebp
00401009  ret
main:
00401010  push    ebp
00401011  mov     ebp,esp
00401013  call    sub (401000h)
00401018  mov     eax,0F00Dh
0040101D  pop     ebp
0040101E  ret
```

Example1.c 1:

EIP = 00401010, but no instruction yet executed

eax	0x003435C0 ⌘
ebp	0x0012FFB8 ⌘
esp	0x0012FF6C ⌘

Key:

☒ **executed instruction,**

♍ **modified value**

⌘ **start value**

```
sub:
00401000  push    ebp
00401001  mov     ebp,esp
00401003  mov     eax,0BEEFh
00401008  pop     ebp
00401009  ret
main:
00401010  push    ebp
00401011  mov     ebp,esp
00401013  call    sub (401000h)
00401018  mov     eax,0F00Dh
0040101D  pop     ebp
0040101E  ret
```

0x0012FF58	undef
0x0012FF5C	undef
0x0012FF60	undef
0x0012FF64	undef
0x0012FF68	undef
0x0012FF6C	0x004012E8 ⌘

Belongs to the frame *before* main() is called

Example1.c 2

eax	0x003435C0 ⌘
ebp	0x0012FFB8 ⌘
esp	0x0012FF68 ♍

Key:

☒ **executed instruction,**

♍ **modified value**

⌘ **start value**

```
sub:
00401000  push    ebp
00401001  mov     ebp,esp
00401003  mov     eax,0BEEFh
00401008  pop     ebp
00401009  ret
main:
00401010  push    ebp ☒
00401011  mov     ebp,esp
00401013  call    sub (401000h)
00401018  mov     eax,0F00Dh
0040101D  pop     ebp
0040101E  ret
```

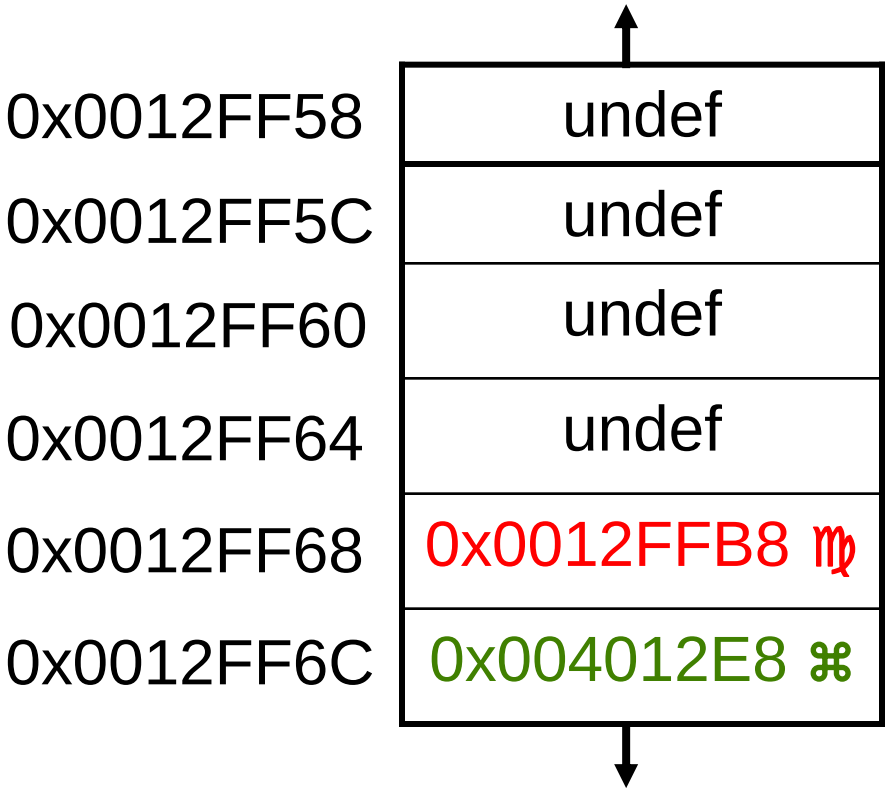

Example1.c 3

eax	0x003435C0 ⌘
ebp	0x0012FF68 ♍
esp	0x0012FF68

Key:

☒ **executed instruction,**

♍ **modified value**

⌘ **start value**

```
sub:
00401000  push    ebp
00401001  mov     ebp,esp
00401003  mov     eax,0BEEFh
00401008  pop     ebp
00401009  ret
main:
00401010  push    ebp
00401011  mov     ebp,esp ☒
00401013  call    sub (401000h)
00401018  mov     eax,0F00Dh
0040101D  pop     ebp
0040101E  ret
```

0x0012FF58	undef
0x0012FF5C	undef
0x0012FF60	undef
0x0012FF64	undef
0x0012FF68	0x0012FFB
0x0012FF6C	0x004012E8 ⌘

Example1.c 4

eax	0x003435C0 ⌘
ebp	0x0012FF68
esp	0x0012FF64 ♍

Key:

☒ **executed instruction,**

♍ **modified value**

⌘ **start value**

```
sub:
00401000  push    ebp
00401001  mov     ebp,esp
00401003  mov     eax,0BEEFh
00401008  pop     ebp
00401009  ret
main:
00401010  push    ebp
00401011  mov     ebp,esp
00401013  call    sub (401000h) ☒
00401018  mov     eax,0F00Dh
0040101D  pop     ebp
0040101E  ret
```

0x0012FF58	undef
0x0012FF5C	undef
0x0012FF60	undef
0x0012FF64	0x00401018 ♍
0x0012FF68	0x0012FFB
0x0012FF6C	0x004012E8 ⌘

Example1.c 5

eax	0x003435C0 ⌘
ebp	0x0012FF68
esp	0x0012FF60 ♍

Key:

☒ **executed instruction,**

♍ **modified value**

⌘ **start value**

```
sub:
00401000  push    ebp ☒
00401001  mov     ebp,esp
00401003  mov     eax,0BEEFh
00401008  pop     ebp
00401009  ret
main:
00401010  push    ebp
00401011  mov     ebp,esp
00401013  call    sub (401000h)
00401018  mov     eax,0F00Dh
0040101D  pop     ebp
0040101E  ret
```

0x0012FF58	undef
0x0012FF5C	undef
0x0012FF60	0x0012FF68 ♍
0x0012FF64	0x00401018
0x0012FF68	0x0012FFB8
0x0012FF6C	0x004012E8 ⌘

Example1.c 6

eax	0x003435C0 ⌘
ebp	0x0012FF60 ♍
esp	0x0012FF60

Key:

☒ **executed instruction,**

♍ **modified value**

⌘ **start value**

```
sub:
00401000  push    ebp
00401001  mov     ebp,esp ☒
00401003  mov     eax,0BEEFh
00401008  pop     ebp
00401009  ret
main:
00401010  push    ebp
00401011  mov     ebp,esp
00401013  call    sub (401000h)
00401018  mov     eax,0F00Dh
0040101D  pop     ebp
0040101E  ret
```

0x0012FF58	undef
0x0012FF5C	undef
0x0012FF60	0x0012FF68
0x0012FF64	0x00401018
0x0012FF68	0x0012FFB8
0x0012FF6C	0x004012E8 ⌘

Example1.c 6
TIME OUT

Let's examine the stack frame!

```
sub
push    ebp
mov     ebp, esp
mov     eax, 0BEEFh
pop     ebp
retn
main
push    ebp
mov     ebp, esp
call    _sub
mov     eax, 0F00Dh
pop     ebp
retn
```

sub's frame
(only saved frame pointer, because it doesn't call anything else, and doesn't have local variables)

main's frame
(saved frame pointer and saved return address)

"Function-before-main"'s frame

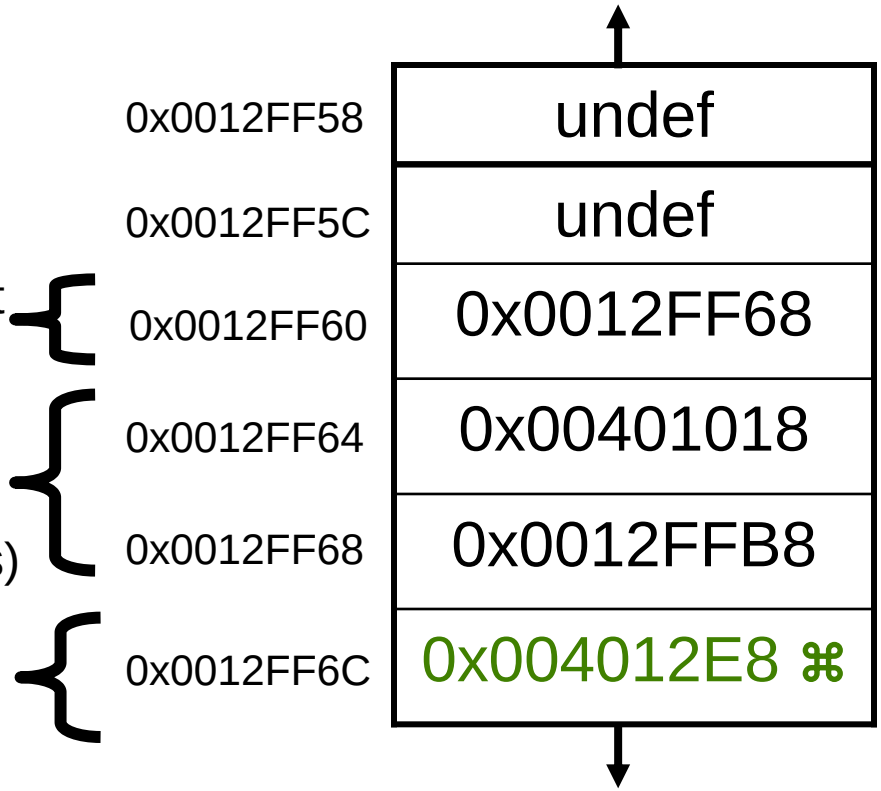

Example1.c 7

eax	0x0000BEEF
ebp	0x0012FF60
esp	0x0012FF60

Key:

☒ **executed instruction,**

♍ **modified value**

⌘ **start value**

```
sub:
00401000  push    ebp
00401001  mov     ebp,esp
00401003  mov     eax,0BEEFh ☒
00401008  pop     ebp
00401009  ret
main:
00401010  push    ebp
00401011  mov     ebp,esp
00401013  call    sub (401000h)
00401018  mov     eax,0F00Dh
0040101D  pop     ebp
0040101E  ret
```

0x0012FF58	undef
0x0012FF5C	undef
0x0012FF60	0x0012FF68
0x0012FF64	0x00401018
0x0012FF68	0x0012FFB8
0x0012FF6C	0x004012E8 ⌘

Example1.c 8

eax	0x0000BEEF
ebp	0x0012FF68 ♍
esp	0x0012FF64 ♍

Key:

☒ **executed instruction,**

♍ **modified value**

⌘ **start value**

```
sub:
00401000  push    ebp
00401001  mov     ebp,esp
00401003  mov     eax,0BEEFh
00401008  pop     ebp ☒
00401009  ret
main:
00401010  push    ebp
00401011  mov     ebp,esp
00401013  call    sub (401000h)
00401018  mov     eax,0F00Dh
0040101D  pop     ebp
0040101E  ret
```

0x0012FF58	undef
0x0012FF5C	undef
0x0012FF60	undef ♍
0x0012FF64	0x00401018
0x0012FF68	0x0012FFB8
0x0012FF6C	0x004012E8 ⌘

Example1.c 9

eax	0x0000BEEF
ebp	0x0012FF68 ♍
esp	0x0012FF68 ♍

Key:

☒ **executed instruction,**

♍ **modified value**

⌘ **start value**

```
sub:
00401000  push    ebp
00401001  mov     ebp,esp
00401003  mov     eax,0BEEFh
00401008  pop     ebp
00401009  ret ☒
main:
00401010  push    ebp
00401011  mov     ebp,esp
00401013  call    sub (401000h)
00401018  mov     eax,0F00Dh
0040101D  pop     ebp
0040101E  ret
```

0x0012FF58	undef
0x0012FF5C	undef
0x0012FF60	undef
0x0012FF64	undef ♍
0x0012FF68	0x0012FFB8
0x0012FF6C	0x004012E8 ⌘

Example1.c 9

eax	0x0000F00D ♍
ebp	0x0012FF68
esp	0x0012FF68

Key:

☒ **executed instruction,**

♍ **modified value**

⌘ **start value**

```
sub:
00401000  push    ebp
00401001  mov     ebp,esp
00401003  mov     eax,0BEEFh
00401008  pop     ebp
00401009  ret
main:
00401010  push    ebp
00401011  mov     ebp,esp
00401013  call    sub (401000h)
00401018  mov     eax,0F00Dh ☒
0040101D  pop     ebp
0040101E  ret
```

0x0012FF58	undef
0x0012FF5C	undef
0x0012FF60	undef
0x0012FF64	undef
0x0012FF68	0x0012FFB8
0x0012FF6C	0x004012E8 ⌘

Example1.c 10

eax	0x0000F00D
ebp	0x0012FFB8 ♍
esp	0x0012FF6C ♍

Key:

☒ **executed instruction,**

♍ **modified value**

⌘ **start value**

```
sub:
00401000  push    ebp
00401001  mov     ebp,esp
00401003  mov     eax,0BEEFh
00401008  pop     ebp
00401009  ret
main:
00401010  push    ebp
00401011  mov     ebp,esp
00401013  call    sub (401000h)
00401018  mov     eax,0F00Dh
0040101D  pop     ebp ☒
0040101E  ret
```

0x0012FF58	undef
0x0012FF5C	undef
0x0012FF60	undef
0x0012FF64	undef
0x0012FF68	undef
0x0012FF6C	0x004012E8 ⌘

Example1.c 11

eax	0x0000F00D
ebp	0x0012FFB8
esp	0x0012FF70 ♍

Key:

☒ **executed instruction,**

♍ **modified value**

⌘ **start value**

```
sub:
00401000  push    ebp
00401001  mov     ebp,esp
00401003  mov     eax,0BEEFh
00401008  pop     ebp
00401009  ret
main:
00401010  push    ebp
00401011  mov     ebp,esp
00401013  call    sub (401000h)
00401018  mov     eax,0F00Dh
0040101D  pop     ebp
0040101E  ret ☒
```

0x0012FF58	undef
0x0012FF5C	undef
0x0012FF60	undef
0x0012FF64	undef
0x0012FF68	undef
0x0012FF6C	undef ♍

Execution would continue at the value ret removed from the stack: 0x004012E8

Example1 Notes

- sub() is deadcode - its return value is not used for anything, and main always returns 0xF00D. If optimizations are turned on in the compiler, it would remove sub()
- Because there are no input parameters to sub(), there is no difference if we compiled as cdecl vs stdcall calling conventions

LEA - Load Effective Address

- Frequently used with pointer arithmetic, sometimes for just arithmetic in general
- Uses the r/m32 form but **is the exception to the rule** that the square brackets [ ] syntax means dereference (“value at”)
- Example: ebx = 0x2, edx = 0x1000
  - lea eax, [edx+ebx*2]
  - eax = 0x1004, not the value at 0x1004

Not covered in book

ADD and SUB

- Adds or Subtracts, just as expected
- Destination operand can be r/m32 or register
- Source operand can be r/m32 or register or immediate
- No source ***and*** destination as r/m32s, because that could allow for memory to memory transfer, which isn't allowed on x86
- Evaluates the operation as if it were on signed AND unsigned data, and sets flags as appropriate. Instructions modify OF, SF, ZF, AF, PF, and CF flags
- add esp, 8
- sub eax, [ebx*2]

Add p. 202, Sub p. 210

Example2.c with Input parameters and Local Variables

```c
#include <stdlib.h>
int sub(int x, int y){
        return 2*x+y;
}

int main(int argc, char ** argv){
        int a;
        a = atoi(argv[1]);
        return sub(argc,a);
}
```

```
.text:00000000 _sub:    push    ebp
.text:00000001          mov     ebp, esp
.text:00000003          mov     eax, [ebp+8]
.text:00000006          mov     ecx, [ebp+0Ch]
.text:00000009          lea     eax, [ecx+eax*2]
.text:0000000C          pop     ebp
.text:0000000D          retn
.text:00000010 _main:   push    ebp
.text:00000011          mov     ebp, esp
.text:00000013          push    ecx
.text:00000014          mov     eax, [ebp+0Ch]
.text:00000017          mov     ecx, [eax+4]
.text:0000001A          push    ecx
.text:0000001B          call    dword ptr ds:__imp__atoi
.text:00000021          add     esp, 4
.text:00000024          mov     [ebp-4], eax
.text:00000027          mov     edx, [ebp-4]
.text:0000002A          push    edx
.text:0000002B          mov     eax, [ebp+8]
.text:0000002E          push    eax
.text:0000002F          call    _sub
.text:00000034          add     esp, 8
.text:00000037          mov     esp, ebp
.text:00000039          pop     ebp
.text:0000003A          retn
```

Example2.c - 1

```
.text:00000000 _sub:      push   ebp
.text:00000001            mov    ebp, esp
.text:00000003            mov    eax, [ebp+8]
.text:00000006            mov    ecx, [ebp+0Ch]
.text:00000009            lea    eax, [ecx+eax*2]
.text:0000000C            pop    ebp
.text:0000000D            retn
.text:00000010 _main:     push   ebp ☒
.text:00000011            mov    ebp, esp
.text:00000013            push   ecx
.text:00000014            mov    eax, [ebp+0Ch]
.text:00000017            mov    ecx, [eax+4]
.text:0000001A            push   ecx
.text:0000001B            call   dword ptr ds:__imp__atoi
.text:00000021            add    esp, 4
.text:00000024            mov    [ebp-4], eax
.text:00000027            mov    edx, [ebp-4]
.text:0000002A            push   edx
.text:0000002B            mov    eax, [ebp+8]
.text:0000002E            push   eax
.text:0000002F            call   _sub
.text:00000034            add    esp, 8
.text:00000037            mov    esp, ebp
.text:00000039            pop    ebp
.text:0000003A            retn
```

eax	**0xcafe ⌘**
ecx	**0xbabe ⌘**
edx	**0xfeed ⌘**
ebp	**0x0012FF50 ⌘**
esp	**0x0012FF24 ♍**

0x0012FF0C	undef
0x0012FF10	undef
0x0012FF14	undef
0x0012FF18	undef
0x0012FF1C	undef
0x0012FF20	undef
0x0012FF24	0x0012FF50(saved ebp)♍
0x0012FF28	Addr after “call _main” ⌘
0x0012FF2C	0x2 (int argc) ⌘
0x0012FF30	0x12FFB0 (char ** argv)⌘

Key: executed instruction ☒, modified value ♍, arbitrary example start value ⌘

Example2.c - 2

```
.text:00000000 _sub:     push   ebp
.text:00000001           mov    ebp, esp
.text:00000003           mov    eax, [ebp+8]
.text:00000006           mov    ecx, [ebp+0Ch]
.text:00000009           lea    eax, [ecx+eax*2]
.text:0000000C           pop    ebp
.text:0000000D           retn
.text:00000010 _main:    push   ebp
.text:00000011           mov    ebp, esp ☒
.text:00000013           push   ecx
.text:00000014           mov    eax, [ebp+0Ch]
.text:00000017           mov    ecx, [eax+4]
.text:0000001A           push   ecx
.text:0000001B           call   dword ptr ds:__imp__atoi
.text:00000021           add    esp, 4
.text:00000024           mov    [ebp-4], eax
.text:00000027           mov    edx, [ebp-4]
.text:0000002A           push   edx
.text:0000002B           mov    eax, [ebp+8]
.text:0000002E           push   eax
.text:0000002F           call   _sub
.text:00000034           add    esp, 8
.text:00000037           mov    esp, ebp
.text:00000039           pop    ebp
.text:0000003A           retn
```

eax	0xcafe
ecx	0xbabe
edx	0xfeed
ebp	0x0012FF24 ♍
esp	0x0012FF24

0x0012FF0C	undef
0x0012FF10	undef
0x0012FF14	undef
0x0012FF18	undef
0x0012FF1C	undef
0x0012FF20	undef
0x0012FF24	0x0012FF50 (saved ebp)
0x0012FF28	Addr after “call _main”
0x0012FF2C	0x2 (int argc)
0x0012FF30	0x12FFB0 (char ** argv)

Example2.c - 3

```
.text:00000000 _sub:     push    ebp
.text:00000001           mov     ebp, esp
.text:00000003           mov     eax, [ebp+8]
.text:00000006           mov     ecx, [ebp+0Ch]
.text:00000009           lea     eax, [ecx+eax*2]
.text:0000000C           pop     ebp
.text:0000000D           retn
.text:00000010 _main:    push    ebp
.text:00000011           mov     ebp, esp
.text:00000013           push    ecx ☒
                         mov     eax, [ebp+0Ch]
                         mov     ecx, [eax+4]
                         push    ecx
                         call    dword ptr ds:__imp__atoi
                         add     esp, 4
                         mov     [ebp-4], eax
                         mov     edx, [ebp-4]
                         push    edx
                         mov     eax, [ebp+8]
                         push    eax
                         call    _sub
                         add     esp, 8
                         mov     esp, ebp
                         pop     ebp
                         retn
```

Caller-save, or space for local var? This time it turns out to be space for local var since there is no corresponding pop, and the address is used later to refer to the value we know is stored in a.

eax	0xcafe
ecx	0xbabe
edx	0xfeed
ebp	0x0012FF24
esp	0x0012FF20 ♍

0x0012FF0C	undef
0x0012FF10	undef
0x0012FF14	undef
0x0012FF18	undef
0x0012FF1C	undef
0x0012FF20	0xbabe (int a) ♍
0x0012FF24	0x0012FF50 (saved ebp)
0x0012FF28	Addr after “call _main”
0x0012FF2C	0x2 (int argc)
0x0012FF30	0x12FFB0 (char ** argv)

Example2.c - 4

eax	0x12FFB0 ♍
ecx	0xbabe
edx	0xfeed
ebp	0x0012FF24
esp	0x0012FF20

```
.text:00000000 _sub:     push   ebp
.text:00000001           mov    ebp, esp
.text:00000003           mov    eax, [ebp+8]
.text:00000006           mov    ecx, [ebp+0Ch]
.text:00000009           lea    eax, [ecx+eax*2]
.text:0000000C           pop    ebp
.text:0000000D           retn
.text:00000010 _main:    push   ebp
.text:00000011           mov    ebp, esp
.text:00000013           push   ecx
.text:00000014           mov    eax, [ebp+0Ch] ⊠
                         mov    ecx, [eax+4]
                         push   ecx
                         call   dword ptr ds:__imp__atoi
                         add    esp, 4
                         mov    [ebp-4], eax
                         mov    edx, [ebp-4]
                         push   edx
                         mov    eax, [ebp+8]
                         push   eax
.text:0000002F           call   _sub
.text:00000034           add    esp, 8
.text:00000037           mov    esp, ebp
.text:00000039           pop    ebp
.text:0000003A           retn
```

Getting the base of the argv char * array (aka argv[0])

0x0012FF0C	undef
0x0012FF10	undef
0x0012FF14	undef
0x0012FF18	undef
0x0012FF1C	undef
0x0012FF20	0xbabe (int a)
0x0012FF24	0x0012FF50 (saved ebp)
0x0012FF28	Addr after “call _main”
0x0012FF2C	0x2 (int argc)
0x0012FF30	0x12FFB0 (char ** argv)

$ ./a.out <arg1> <arg2>

argv[0] = (./a.out) pointer to the name of program
argv[1] = (<arg1>) pointer to 1st arg passed via the command line

Example2 - 5

```
.text:00000000 _sub:     push   ebp
.text:00000001           mov    ebp, esp
.text:00000003           mov    eax, [ebp+8]
.text:00000006           mov    ecx, [ebp+0Ch]
.text:00000009           lea    eax, [ecx+eax*2]
.text:0000000C           pop    ebp
.text:0000000D           retn
.text:00000010 _main:    push   ebp
.text:00000011           mov    ebp, esp
.text:00000013           push   ecx
.text:00000014           mov    eax, [ebp+0Ch]
.text:00000017           mov    ecx, [eax+4] ☒
                         push   ecx
                         call   dword ptr ds:__imp__atoi
                         add    esp, 4
                         mov    [ebp-4], eax
                         mov    edx, [ebp-4]
                         push   edx
                         mov    eax, [ebp+8]
                         push   eax
                         call   _sub
                         add    esp, 8
                         mov    esp, ebp
                         pop    ebp
                         retn
```

Getting the char * at argv[1]
(I chose 0x12FFD4 arbitrarily since it's out of the stack scope we're currently looking at)

eax	0x12FFB0
ecx	0x12FFD4♍(arbitrary⌘)
edx	0xfeed
ebp	0x0012FF24
esp	0x0012FF20

0x0012FF0C	undef
0x0012FF10	undef
0x0012FF14	undef
0x0012FF18	undef
0x0012FF1C	undef
0x0012FF20	0xbabe (int a)
0x0012FF24	0x0012FF50 (saved ebp)
0x0012FF28	Addr after “call _main”
0x0012FF2C	0x2 (int argc)
0x0012FF30	0x12FFB0 (char ** argv)

Example2 - 6

```
.text:00000000 _sub:    push    ebp
.text:00000001          mov     ebp, esp
.text:00000003          mov     eax, [ebp+8]
.text:00000006          mov     ecx, [ebp+0Ch]
.text:00000009          lea     eax, [ecx+eax*2]
                        pop     ebp
                        retn
                        push    ebp
                        mov     ebp, esp
                        push    ecx
                        mov     eax, [ebp+0Ch]
                        mov     ecx, [eax+4]
                        push    ecx ☒
                        call    dword ptr ds:__imp__atoi ☒
                        add     esp, 4 ☒
                        mov     [ebp-4], eax
                        mov     edx, [ebp-4]
                        push    edx
                        mov     eax, [ebp+8]
                        push    eax
                        call    _sub
                        add     esp, 8
                        mov     esp, ebp
                        pop     ebp
                        retn
```

Saving some slides…
This will push the address of the string at argv[1] (0x12FFD4). atoi() will read the string and turn in into an int, put that int in eax, and return. Then the adding 4 to esp will negate the having pushed the input parameter and make 0x12FF1C undefined again (this is indicative of cdecl)

eax	0x100♍ (arbitrary⌘)
ecx	0x12FFD4
edx	0xfeed
ebp	0x0012FF24
esp	0x0012FF20

0x0012FF0C	undef
0x0012FF10	undef
0x0012FF14	undef
0x0012FF18	undef
0x0012FF1C	undef ♍
0x0012FF20	0xbabe (int a)
0x0012FF24	0x0012FF50 (saved ebp)
0x0012FF28	Addr after “call _main”
0x0012FF2C	0x2 (int argc)
0x0012FF30	0x12FFB0 (char ** argv)

Example2 - 7

```
.text:00000000 _sub:    push   ebp
.text:00000001          mov    ebp, esp
.text:00000003          mov    eax, [ebp+8]
.text:00000006          mov    ecx, [ebp+0Ch]
.text:00000009          lea    eax, [ecx+eax*2]
.text:0000000C          pop    ebp
.text:0000000D          retn
.text:00000010 _main:   push   ebp
.text:00000011          mov    ebp, esp
.text:00000013          push   ecx
                        mov    eax, [ebp+0Ch]
                        mov    ecx, [eax+4]
                        push   ecx
                        call   dword ptr ds:__imp__atoi
                        add    esp, 4
                        mov    [ebp-4], eax ☒
                        mov    edx, [ebp-4] ☒
                        push   edx ☒
                        mov    eax, [ebp+8]
                        push   eax
                        call   _sub
                        add    esp, 8
                        mov    esp, ebp
                        pop    ebp
.text:0000003A          retn
```

First setting “a” equal to the return value. Then pushing “a” as the second parameter (int y) in sub(). We can see an obvious optimization would have been to replace the last two instructions with “push eax”.

eax	0x100
ecx	0x12FFD4
edx	0x100 ♍
ebp	0x0012FF24
esp	0x0012FF1C ♍

0x0012FF0C	undef
0x0012FF10	undef
0x0012FF14	undef
0x0012FF18	undef
0x0012FF1C	0x100 (int y) ♍
0x0012FF20	0x100 (int a/int x) ♍
0x0012FF24	0x0012FF50 (saved ebp)
0x0012FF28	Addr after “call _main”
0x0012FF2C	0x2 (int argc)
0x0012FF30	0x12FFB0 (char ** argv)

Example2 - 8

```
.text:00000000 _sub:     push    ebp
.text:00000001           mov     ebp, esp
.text:00000003           mov     eax, [ebp+8]
.text:00000006           mov     ecx, [ebp+0Ch]
.text:00000009           lea     eax, [ecx+eax*2]
.text:0000000C           pop     ebp
.text:0000000D           retn
.text:00000010 _main:    push    ebp
.text:00000011           mov     ebp, esp
.text:00000013           push    ecx
.text:00000014           mov     eax, [ebp+0Ch]
.text:00000017           mov     ecx, [eax+4]
.text:0000001A           push    ecx
.text:0000001B           call    dword ptr ds:__imp__atoi
.text:00000021           add     esp, 4
.text:00000024           mov     [ebp-4], eax
.text:00000027           mov     edx, [ebp-4]
.text:0000002A           push    edx
                         mov     eax, [ebp+8] ☒
                         push    eax ☒
                         call    _sub
                         add     esp, 8
                         mov     esp, ebp
                         pop     ebp
.text:0000003A           retn
```

Pushing argc as the first parameter (int x) to sub()

eax	0x2 ♍
ecx	0x12FFD4
edx	0x100
ebp	0x0012FF24
esp	0x0012FF18 ♍

0x0012FF0C	undef
0x0012FF10	undef
0x0012FF14	undef
0x0012FF18	0x2 (int x) ♍
0x0012FF1C	0x100 (int y)
0x0012FF20	0x100 (int a)
0x0012FF24	0x0012FF50 (saved ebp)
0x0012FF28	Addr after “call _main”
0x0012FF2C	0x2 (int argc)
0x0012FF30	0x12FFB0 (char ** argv)

Example2 - 9

```
.text:00000000 _sub:     push   ebp
.text:00000001           mov    ebp, esp
.text:00000003           mov    eax, [ebp+8]
.text:00000006           mov    ecx, [ebp+0Ch]
.text:00000009           lea    eax, [ecx+eax*2]
.text:0000000C           pop    ebp
.text:0000000D           retn
.text:00000010 _main:    push   ebp
.text:00000011           mov    ebp, esp
.text:00000013           push   ecx
.text:00000014           mov    eax, [ebp+0Ch]
.text:00000017           mov    ecx, [eax+4]
.text:0000001A           push   ecx
.text:0000001B           call   dword ptr ds:__imp__atoi
.text:00000021           add    esp, 4
.text:00000024           mov    [ebp-4], eax
.text:00000027           mov    edx, [ebp-4]
.text:0000002A           push   edx
.text:0000002B           mov    eax, [ebp+8]
.text:0000002E           push   eax
.text:0000002F           call   _sub ☒
.text:00000034           add    esp, 8
.text:00000037           mov    esp, ebp
.text:00000039           pop    ebp
.text:0000003A           retn
```

eax	0x2
ecx	0x12FFD4
edx	0x100
ebp	0x0012FF24
esp	0x0012FF14 ♍

0x0012FF0C	undef
0x0012FF10	undef
0x0012FF14	0x00000034 ♍
0x0012FF18	0x2 (int x)
0x0012FF1C	0x100 (int y)
0x0012FF20	0x100 (int a)
0x0012FF24	0x0012FF50 (saved ebp)
0x0012FF28	Addr after “call _main”
0x0012FF2C	0x2 (int argc)
0x0012FF30	0x12FFB0 (char ** argv)

Example2 - 10

```
.text:00000000 _sub:     push    ebp ☒
.text:00000001           mov     ebp, esp ☒
.text:00000003           mov     eax, [ebp+8]
.text:00000006           mov     ecx, [ebp+0Ch]
.text:00000009           lea     eax, [ecx+eax*2]
.text:0000000C           pop     ebp
.text:0000000D           retn
.text:00000010 _main:    push    ebp
.text:00000011           mov     ebp, esp
.text:00000013           push    ecx
.text:00000014           mov     eax, [ebp+0Ch]
.text:00000017           mov     ecx, [eax+4]
.text:0000001A           push    ecx
.text:0000001B           call    dword ptr ds:__imp__atoi
.text:00000021           add     esp, 4
.text:00000024           mov     [ebp-4], eax
.text:00000027           mov     edx, [ebp-4]
.text:0000002A           push    edx
.text:0000002B           mov     eax, [ebp+8]
.text:0000002E           push    eax
.text:0000002F           call    _sub
.text:00000034           add     esp, 8
.text:00000037           mov     esp, ebp
.text:00000039           pop     ebp
.text:0000003A           retn
```

eax	0x2
ecx	0x12FFD4
edx	0x100
ebp	0x0012FF10 ♍
esp	0x0012FF10 ♍

0x0012FF0C	undef
0x0012FF10	0x0012FF24(saved ebp)♍
0x0012FF14	0x00000034
0x0012FF18	0x2 (int x)
0x0012FF1C	0x100 (int y)
0x0012FF20	0x100 (int a)
0x0012FF24	0x0012FF50 (saved ebp)
0x0012FF28	Addr after “call _main”
0x0012FF2C	0x2 (int argc)
0x0012FF30	0x12FFB0 (char ** argv)

Example2 - 11

```
.text:00000000 _sub:     push    ebp
.text:00000001           mov     ebp, esp
                         mov     eax, [ebp+8] ☒
                         mov     ecx, [ebp+0Ch] ☒
                         lea     eax, [ecx+eax*2]
                         pop     ebp
                         retn
.text:00000010 _main:    push    ebp
.text:00000011           mov     ebp, esp
.text:00000013           push    ecx
.text:00000014           mov     eax, [ebp+0Ch]
.text:00000017           mov     ecx, [eax+4]
.text:0000001A           push    ecx
.text:0000001B           call    dword ptr ds:__imp__atoi
.text:00000021           add     esp, 4
.text:00000024           mov     [ebp-4], eax
.text:00000027           mov     edx, [ebp-4]
.text:0000002A           push    edx
.text:0000002B           mov     eax, [ebp+8]
.text:0000002E           push    eax
.text:0000002F           call    _sub
.text:00000034           add     esp, 8
.text:00000037           mov     esp, ebp
.text:00000039           pop     ebp
.text:0000003A           retn
```

Move “x” into eax, and “y” into ecx.

eax	0x2 ♍ (no value change)
ecx	0x100 ♍
edx	0x100
ebp	0x0012FF10
esp	0x0012FF10

0x0012FF0C	undef
0x0012FF10	0x0012FF24(saved ebp)
0x0012FF14	0x00000034
0x0012FF18	0x2 (int x)
0x0012FF1C	0x100 (int y)
0x0012FF20	0x100 (int a)
0x0012FF24	0x0012FF50 (saved ebp)
0x0012FF28	Addr after “call _main”
0x0012FF2C	0x2 (int argc)
0x0012FF30	0x12FFB0 (char ** argv)

Example2 - 12

```
.text:00000000 _sub:    push    ebp
.text:00000001          mov     ebp, esp
.text:00000003          mov     eax, [ebp+8]
                        mov     ecx, [ebp+0Ch]
                        lea     eax, [ecx+eax*2] ☒
                        pop     ebp
                        retn
                        push    ebp
                        mov     ebp, esp
                        push    ecx
                        mov     eax, [ebp+0Ch]
                        mov     ecx, [eax+4]
                        push    ecx
.text:0000001B          call    dword ptr ds:__imp__atoi
.text:00000021          add     esp, 4
.text:00000024          mov     [ebp-4], eax
.text:00000027          mov     edx, [ebp-4]
.text:0000002A          push    edx
.text:0000002B          mov     eax, [ebp+8]
.text:0000002E          push    eax
.text:0000002F          call    _sub
.text:00000034          add     esp, 8
.text:00000037          mov     esp, ebp
.text:00000039          pop     ebp
.text:0000003A          retn
```

Set the return value (eax) to 2*x + y. Note: neither pointer arith, nor an "address" which was loaded. Just an afficient way to do a calculation.

eax	0x104 ♍
ecx	0x100
edx	0x100
ebp	0x0012FF10
esp	0x0012FF10

0x0012FF0C	undef
0x0012FF10	0x0012FF24(saved ebp)
0x0012FF14	0x00000034
0x0012FF18	0x2 (int x)
0x0012FF1C	0x100 (int y)
0x0012FF20	0x100 (int a)
0x0012FF24	0x0012FF50 (saved ebp)
0x0012FF28	Addr after "call _main"
0x0012FF2C	0x2 (int argc)
0x0012FF30	0x12FFB0 (char ** argv)

Example2 - 13

```
.text:00000000 _sub:     push    ebp
.text:00000001           mov     ebp, esp
.text:00000003           mov     eax, [ebp+8]
.text:00000006           mov     ecx, [ebp+0Ch]
.text:00000009           lea     eax, [ecx+eax*2]
.text:0000000C           pop     ebp ☒
.text:0000000D           retn
.text:00000010 _main:    push    ebp
.text:00000011           mov     ebp, esp
.text:00000013           push    ecx
.text:00000014           mov     eax, [ebp+0Ch]
.text:00000017           mov     ecx, [eax+4]
.text:0000001A           push    ecx
.text:0000001B           call    dword ptr ds:__imp__a
.text:00000021           add     esp, 4
.text:00000024           mov     [ebp-4], eax
.text:00000027           mov     edx, [ebp-4]
.text:0000002A           push    edx
.text:0000002B           mov     eax, [ebp+8]
.text:0000002E           push    eax
.text:0000002F           call    _sub
.text:00000034           add     esp, 8
.text:00000037           mov     esp, ebp
.text:00000039           pop     ebp
.text:0000003A           retn
```

eax	0x104
ecx	0x100
edx	0x100
ebp	0x0012FF24 ♍
esp	0x0012FF14 ♍

0x0012FF0C	undef
0x0012FF10	undef ♍
0x0012FF14	0x00000034
0x0012FF18	0x2 (int x)
0x0012FF1C	0x100 (int y)
0x0012FF20	0x100 (int a)
0x0012FF24	0x0012FF50 (saved ebp)
0x0012FF28	Addr after “call _main”
0x0012FF2C	0x2 (int argc)
0x0012FF30	0x12FFB0 (char ** argv)

Note: Even though we increased esp, causing this value to become undefined, the 0x0012FF24 value stored here did not get erased!

Example2 - 14

```
.text:00000000 _sub:     push   ebp
.text:00000001           mov    ebp, esp
.text:00000003           mov    eax, [ebp+8]
.text:00000006           mov    ecx, [ebp+0Ch]
.text:00000009           lea    eax, [ecx+eax*2]
.text:0000000C           pop    ebp
.text:0000000D           retn ☒
.text:00000010 _main:    push   ebp
.text:00000011           mov    ebp, esp
.text:00000013           push   ecx
.text:00000014           mov    eax, [ebp+0Ch]
.text:00000017           mov    ecx, [eax+4]
.text:0000001A           push   ecx
.text:0000001B           call   dword ptr ds:__imp__atoi
.text:00000021           add    esp, 4
.text:00000024           mov    [ebp-4], eax
.text:00000027           mov    edx, [ebp-4]
.text:0000002A           push   edx
.text:0000002B           mov    eax, [ebp+8]
.text:0000002E           push   eax
.text:0000002F           call   _sub
.text:00000034           add    esp, 8
.text:00000037           mov    esp, ebp
.text:00000039           pop    ebp
.text:0000003A           retn
```

eax	0x104
ecx	0x100
edx	0x100
ebp	0x0012FF24
esp	0x0012FF18 ♍

0x0012FF0C	undef
0x0012FF10	undef
0x0012FF14	undef ♍
0x0012FF18	0x2 (int x)
0x0012FF1C	0x100 (int y)
0x0012FF20	0x100 (int a)
0x0012FF24	0x0012FF50 (saved ebp)
0x0012FF28	Addr after “call _main”
0x0012FF2C	0x2 (int argc)
0x0012FF30	0x12FFB0 (char ** argv)

Example2 - 15

```
.text:00000000 _sub:     push   ebp
.text:00000001           mov    ebp, esp
.text:00000003           mov    eax, [ebp+8]
.text:00000006           mov    ecx, [ebp+0Ch]
.text:00000009           lea    eax, [ecx+eax*2]
.text:0000000C           pop    ebp
.text:0000000D           retn
.text:00000010 _main:    push   ebp
.text:00000011           mov    ebp, esp
.text:00000013           push   ecx
.text:00000014           mov    eax, [ebp+0Ch]
.text:00000017           mov    ecx, [eax+4]
.text:0000001A           push   ecx
.text:0000001B           call   dword ptr ds:__imp__atoi
.text:00000021           add    esp, 4
.text:00000024           mov    [ebp-4], eax
.text:00000027           mov    edx, [ebp-4]
.text:0000002A           push   edx
.text:0000002B           mov    eax, [ebp+8]
.text:0000002E           push   eax
.text:0000002F           call   _sub
.text:00000034           add    esp, 8 ☒
.text:00000037           mov    esp, ebp
.text:00000039           pop    ebp
.text:0000003A           retn
```

eax	0x104
ecx	0x100
edx	0x100
ebp	0x0012FF24
esp	0x0012FF20 ♍

0x0012FF0C	undef
0x0012FF10	undef
0x0012FF14	undef
0x0012FF18	undef ♍
0x0012FF1C	undef ♍
0x0012FF20	0x100 (int a)
0x0012FF24	0x0012FF50 (saved ebp)
0x0012FF28	Addr after “call _main”
0x0012FF2C	0x2 (int argc)
0x0012FF30	0x12FFB0 (char ** argv)

Example2 - 16

```
.text:00000000 _sub:     push   ebp
.text:00000001           mov    ebp, esp
.text:00000003           mov    eax, [ebp+8]
.text:00000006           mov    ecx, [ebp+0Ch]
.text:00000009           lea    eax, [ecx+eax*2]
.text:0000000C           pop    ebp
.text:0000000D           retn
.text:00000010 _main:    push   ebp
.text:00000011           mov    ebp, esp
.text:00000013           push   ecx
.text:00000014           mov    eax, [ebp+0Ch]
.text:00000017           mov    ecx, [eax+4]
.text:0000001A           push   ecx
.text:0000001B           call   dword ptr ds:__imp__atoi
.text:00000021           add    esp, 4
.text:00000024           mov    [ebp-4], eax
.text:00000027           mov    edx, [ebp-4]
.text:0000002A           push   edx
.text:0000002B           mov    eax, [ebp+8]
.text:0000002E           push   eax
.text:0000002F           call   _sub
.text:00000034           add    esp, 8
.text:00000037           mov    esp, ebp ☒
.text:00000039           pop    ebp
.text:0000003A           retn
```

eax	0x104
ecx	0x100
edx	0x100
ebp	0x0012FF24
esp	0x0012FF24 ♍

0x0012FF0C	undef
0x0012FF10	undef
0x0012FF14	undef
0x0012FF18	undef
0x0012FF1C	undefd
0x0012FF20	undef ♍
0x0012FF24	0x0012FF50 (saved ebp)
0x0012FF28	Addr after “call _main”
0x0012FF2C	0x2 (int argc)
0x0012FF30	0x12FFB0 (char ** argv)

Example2 - 17

```
.text:00000000 _sub:     push   ebp
.text:00000001           mov    ebp, esp
.text:00000003           mov    eax, [ebp+8]
.text:00000006           mov    ecx, [ebp+0Ch]
.text:00000009           lea    eax, [ecx+eax*2]
.text:0000000C           pop    ebp
.text:0000000D           retn
.text:00000010 _main:    push   ebp
.text:00000011           mov    ebp, esp
.text:00000013           push   ecx
.text:00000014           mov    eax, [ebp+0Ch]
.text:00000017           mov    ecx, [eax+4]
.text:0000001A           push   ecx
.text:0000001B           call   dword ptr ds:__imp__atoi
.text:00000021           add    esp, 4
.text:00000024           mov    [ebp-4], eax
.text:00000027           mov    edx, [ebp-4]
.text:0000002A           push   edx
.text:0000002B           mov    eax, [ebp+8]
.text:0000002E           push   eax
.text:0000002F           call   _sub
.text:00000034           add    esp, 8
.text:00000037           mov    esp, ebp
.text:00000039           pop    ebp ☒
.text:0000003A           retn
```

eax	0x104
ecx	0x100
edx	0x100
ebp	0x0012FF50 ♍
esp	0x0012FF28 ♍

0x0012FF0C	undef
0x0012FF10	undef
0x0012FF14	undef
0x0012FF18	undef
0x0012FF1C	undef
0x0012FF20	undef
0x0012FF24	undef ♍
0x0012FF28	Addr after “call _main”
0x0012FF2C	0x2 (int argc)
0x0012FF30	0x12FFB0 (char ** argv)

Instructions we now know (9)

- NOP
- PUSH/POP
- CALL/RET
- MOV
- LEA
- ADD/SUB