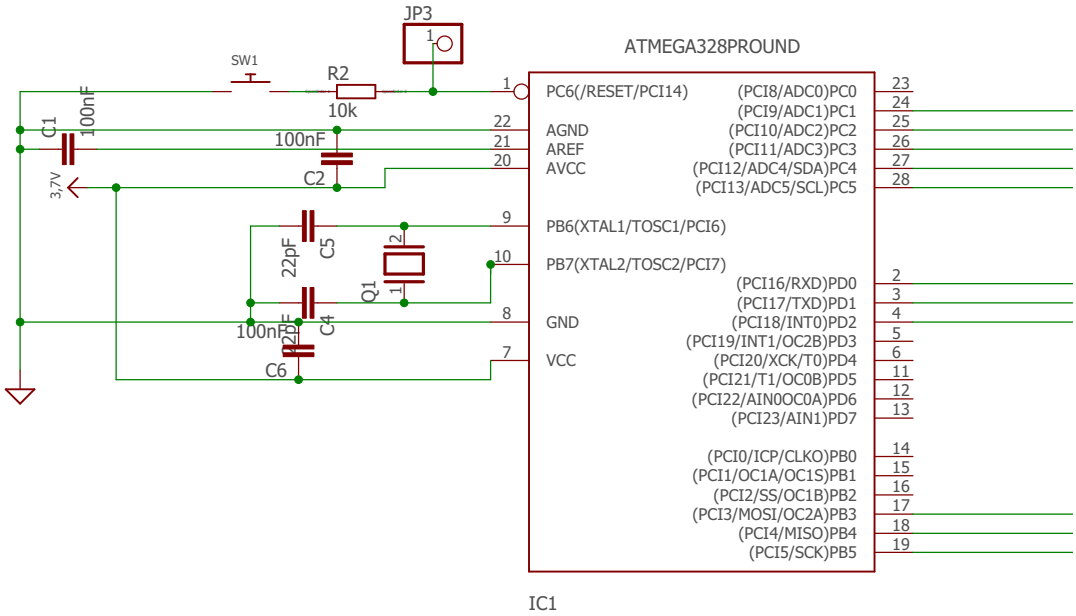
JP3
1
SW1
R2
10k
C1
100nF
3,7V
100nF
C2
22pF
C5
Q1
2
1
100nF
C4
22pF
C6
ATMEGA328PROUND
1
22
21
20
9
10
8
7
PC6(/RESET/PCI14)
AGND
AREF
AVCC
PB6(XTAL1/TOSC1/PCI6)
PB7(XTAL2/TOSC2/PCI7)
GND
VCC
(PCI8/ADC0)PC0
(PCI9/ADC1)PC1
(PCI10/ADC2)PC2
(PCI11/ADC3)PC3
(PCI12/ADC4/SDA)PC4
(PCI13/ADC5/SCL)PC5
(PCI16/RXD)PD0
(PCI17/TXD)PD1
(PCI18/INT0)PD2
(PCI19/INT1/OC2B)PD3
(PCI20/XCK/T0)PD4
(PCI21/T1/OC0B)PD5
(PCI22/AIN0OC0A)PD6
(PCI23/AIN1)PD7
(PCI0/ICP/CLKO)PB0
(PCI1/OC1A/OC1S)PB1
(PCI2/SS/OC1B)PB2
(PCI3/MOSI/OC2A)PB3
(PCI4/MISO)PB4
(PCI5/SCK)PB5
23
24
25
26
27
28
2
3
4
5
6
11
12
13
14
15
16
17
18
19
IC1

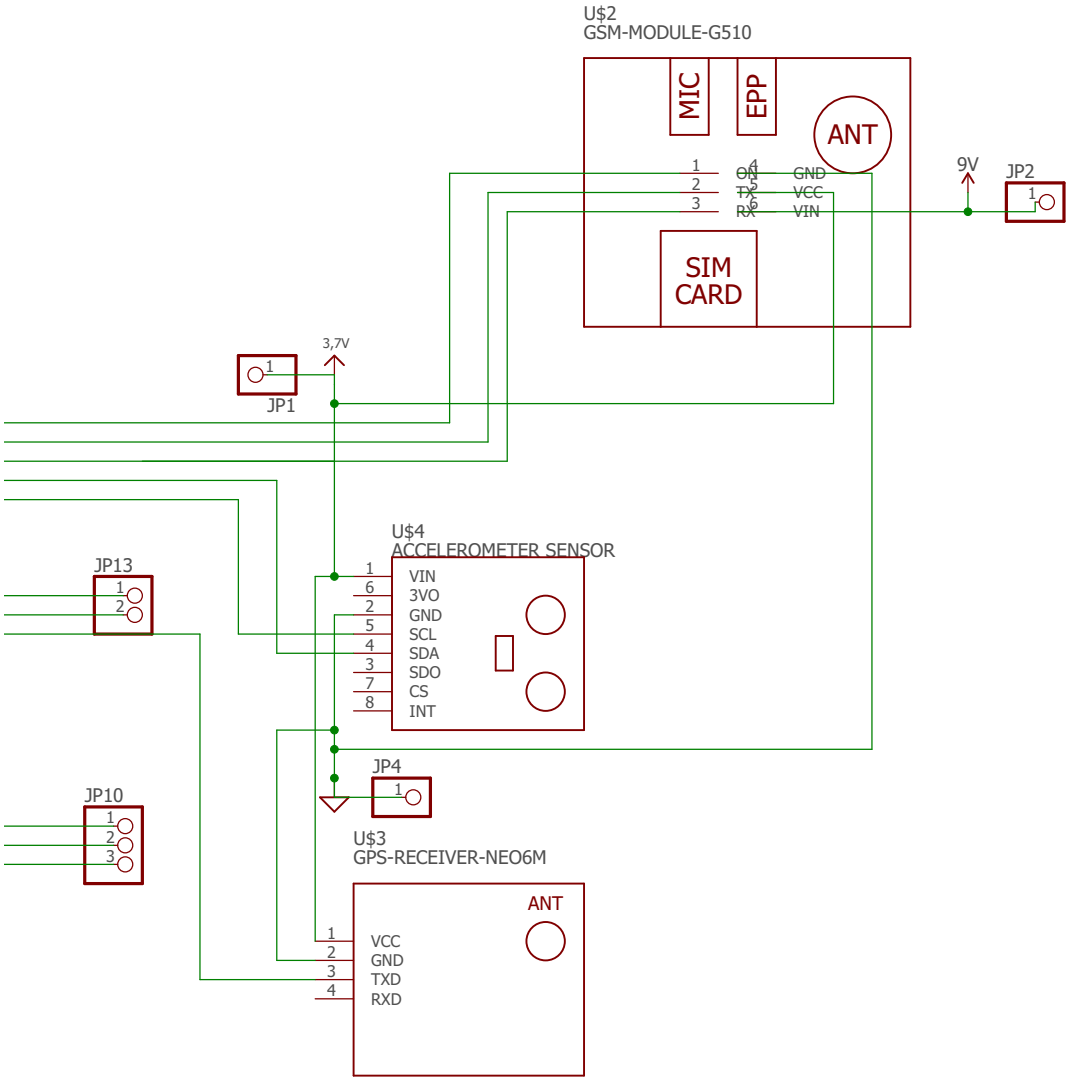
U$2
GSM-MODULE-G510
MIC
EPP
ANT
1
2
3
4
5
6
ON
TX
RX
GND
VCC
VIN
SIM
CARD
9V
JP2
1
3,7V
1
JP1
U$4
ACCELEROMETER SENSOR
1
6
2
5
4
3
7
8
VIN
3VO
GND
SCL
SDA
SDO
CS
INT
JP13
1
2
JP4
1
JP10
1
2
3
U$3
GPS-RECEIVER-NEO6M
ANT
1
2
3
4
VCC
GND
TXD
RXD