# 8 – Robot‘s Sensory Equipment

Robotics and Computer Vision (BPC-PRP)

Course supervisor: Ing. Adam Ligocki, Ph.D.

Ing. Adam Ligocki, Ph.D.

Brno University of Technology
2026

Robotics and AI

# Robot Big Picture

# „Fenrir“ Project

All hardware and software are fully documented

Open-source GitHub repository:
[github.com/Robotics-BUT/fenrir-project](github.com/Robotics-BUT/fenrir-project)

Includes:

- Full hardware design
- 3D printed parts
- Robot software and setup scripts
- Tutorials for building and running the robot

Everything you need to assemble and bring the robot to life!

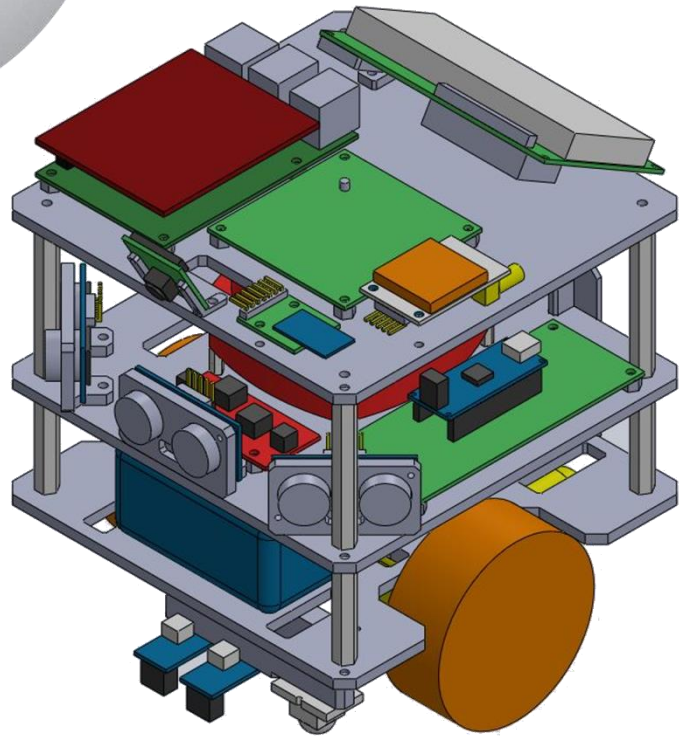

# Robot – Component Scheme

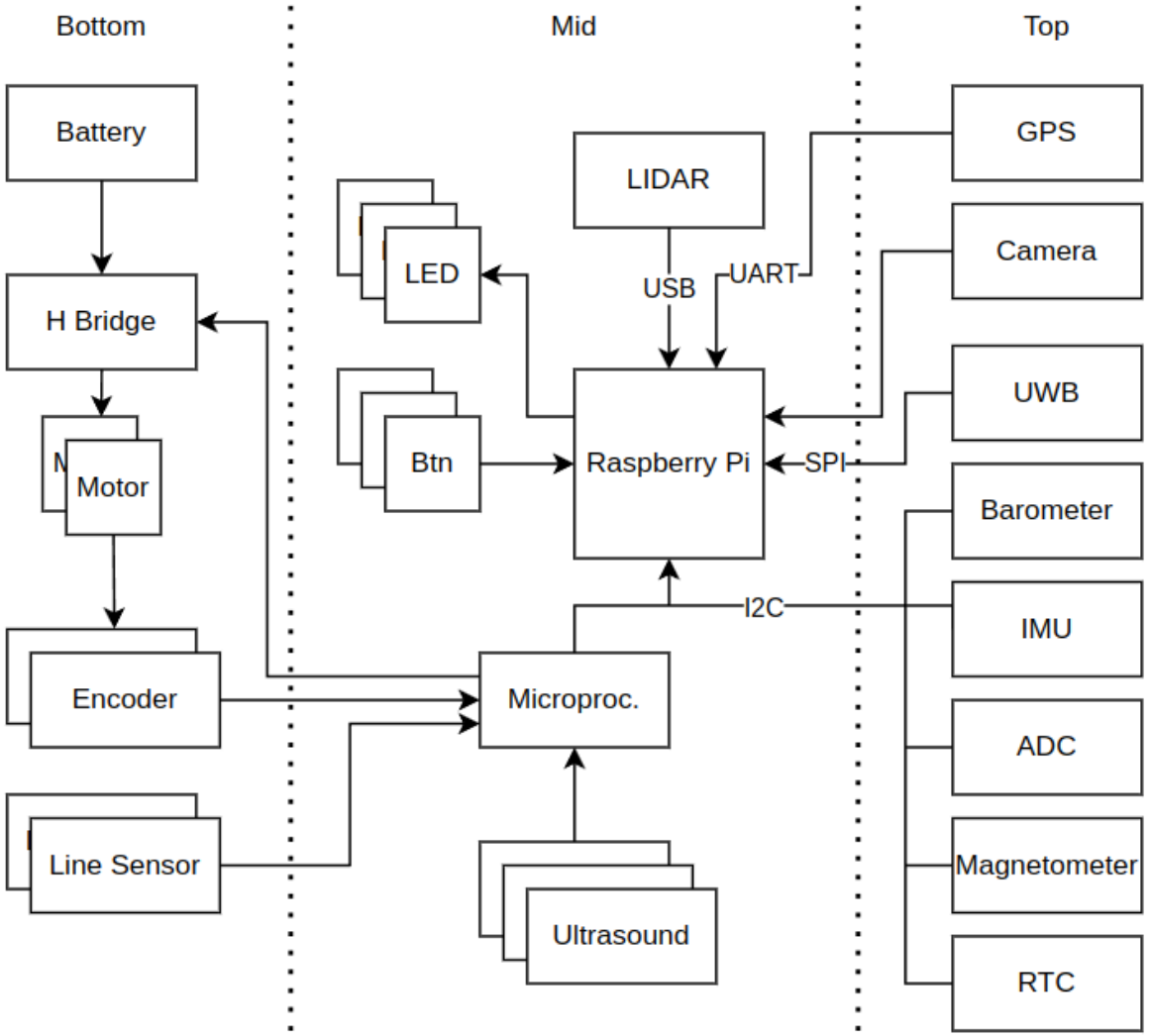


**Details:** https://github.com/Robotics-BUT/fenrir-project

# Robot – Electrical Schema

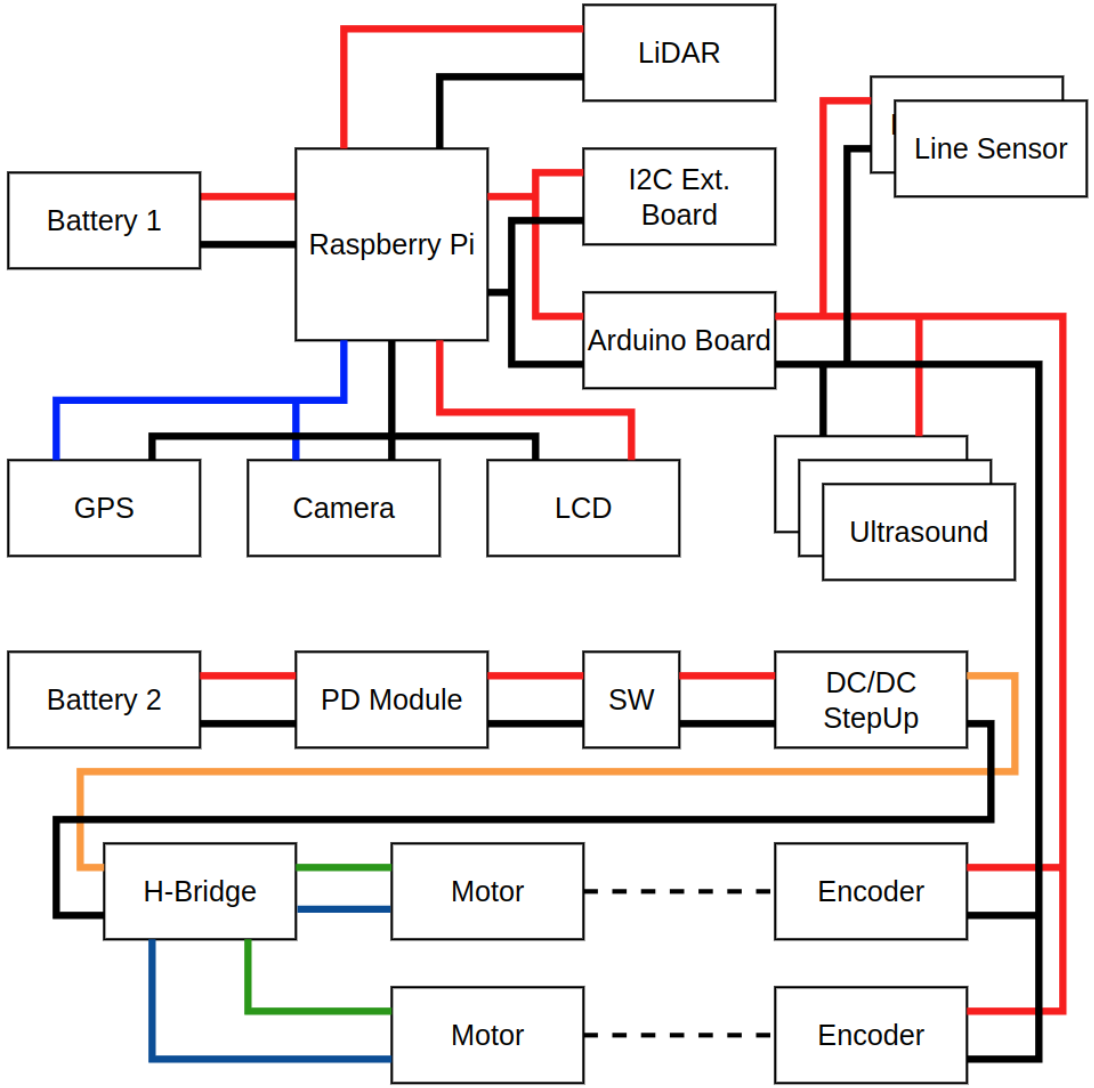


**Details:** https://github.com/Robotics-BUT/fenrir-project

# Robot – Wiring

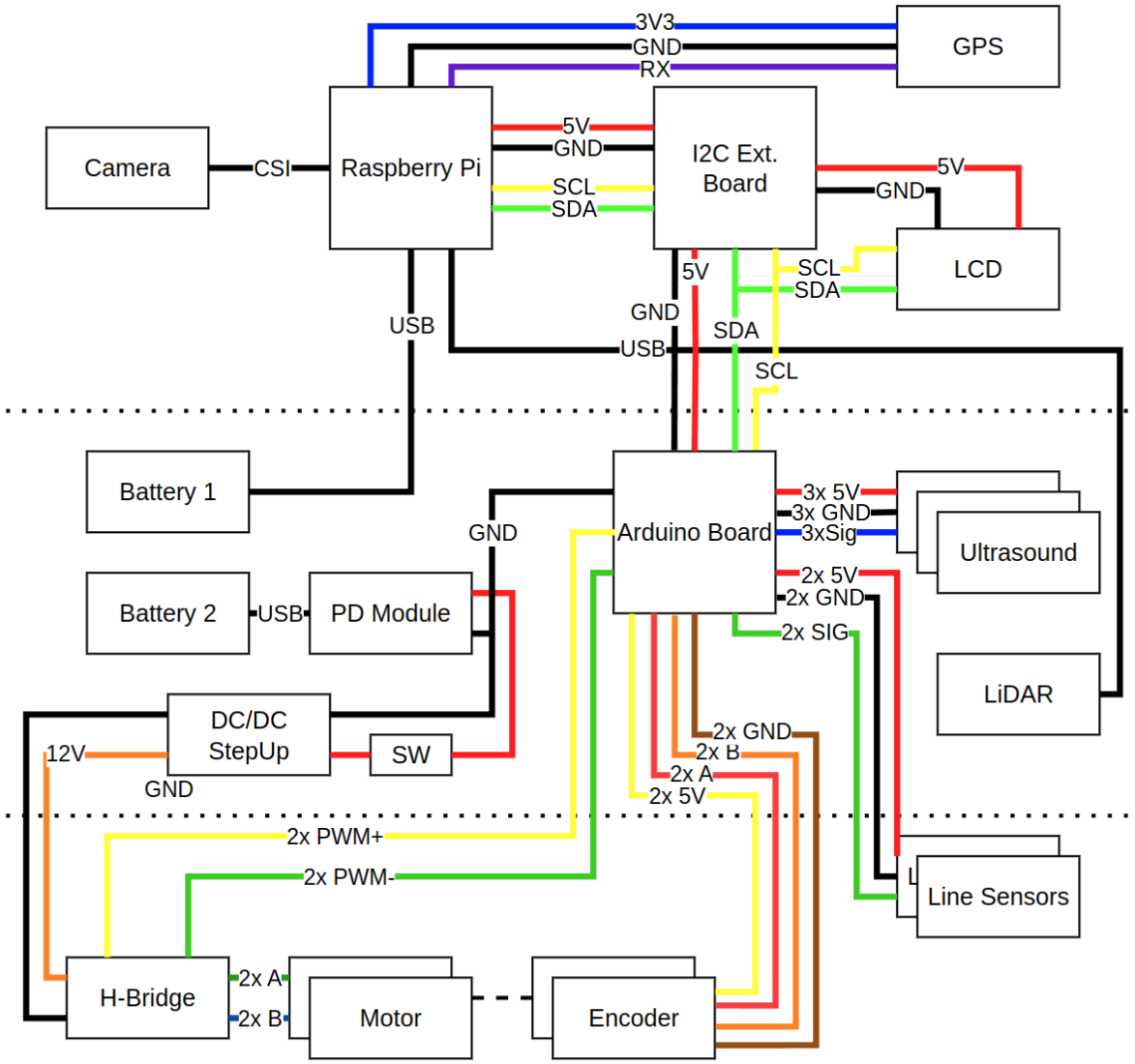


**Details:** https://github.com/Robotics-BUT/fenrir-project

# UART Bus

UART is a hardware communication protocol used for **asynchronous, full-duplex serial communication** between two devices. It is commonly found in embedded systems for interfacing with peripherals or debugging.

Each UART transmission is framed to enable synchronization:

- **Start Bit (1 bit)** – pulls the line low to signal the start of transmission
- **Data Bits (5 to 9 bits)** – actual payload
- **Optional Parity Bit (1 bit)** – basic error detection (even/odd)
- **Stop Bit(s) (1 or 2 bits)** – idle high, indicates end of frame

All bits are transmitted **LSB first**. Line is idle (logic high) between frames.

Use Cases

- Embedded debugging (serial console)
- Communication with modules (GPS, Bluetooth, Wi-Fi)
- Firmware flashing (bootloader interface)
- Inter-MCU communication (point-to-point)

# UART Bus

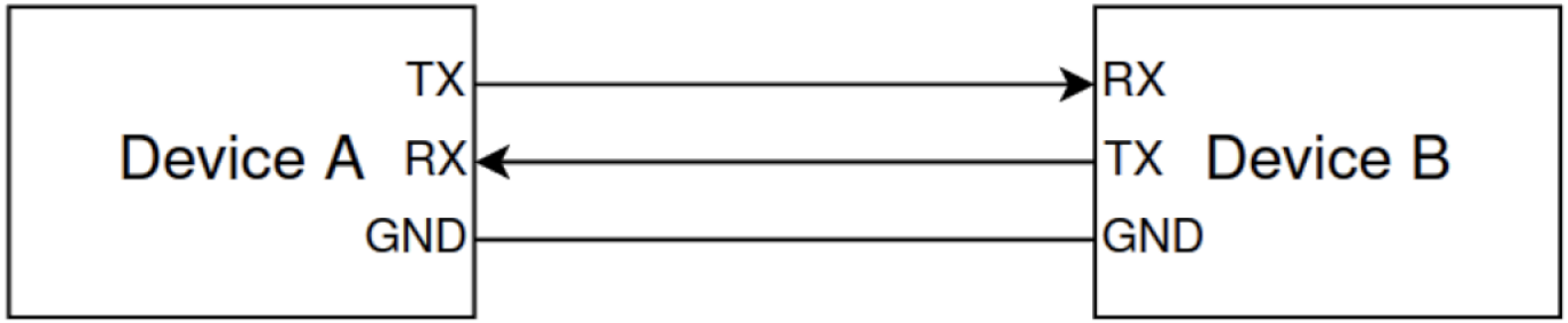


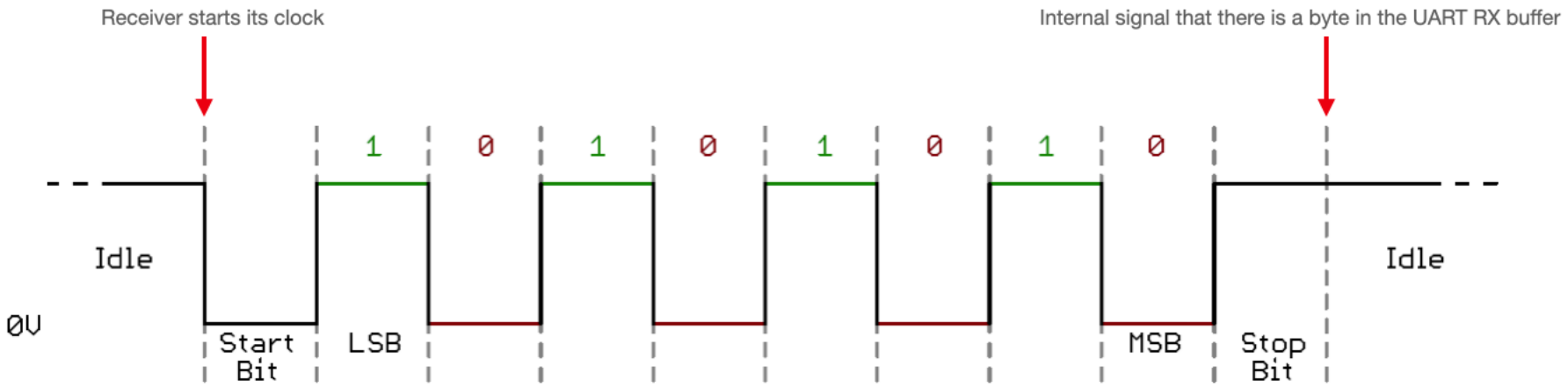


https://vanhunteradams.com/Protocols/UART/UART.html

# I²C Bus

I²C is a **synchronous, master-slave serial communication protocol**, commonly used to connect low-speed peripherals to microcontrollers in embedded systems.

It operates over **two bidirectional lines**:

- SCL – Serial Clock Line (driven by master)
- SDA – Serial Data Line (shared by all devices)

Both lines are **open-drain** and require **pull-up resistors**.
Speeds: 100kHz, 400kHz, 1MHz, 3.4MHz
Bus length and speed are limited by **capacitance** and **line resistance**

Use Cases

- Connecting EEPROMs, RTCs, sensors, displays, ADCs/DACs
- Short-range communication on PCB or between closely located boards
- Preferred when multiple peripherals share a common bus

# I²C Bus

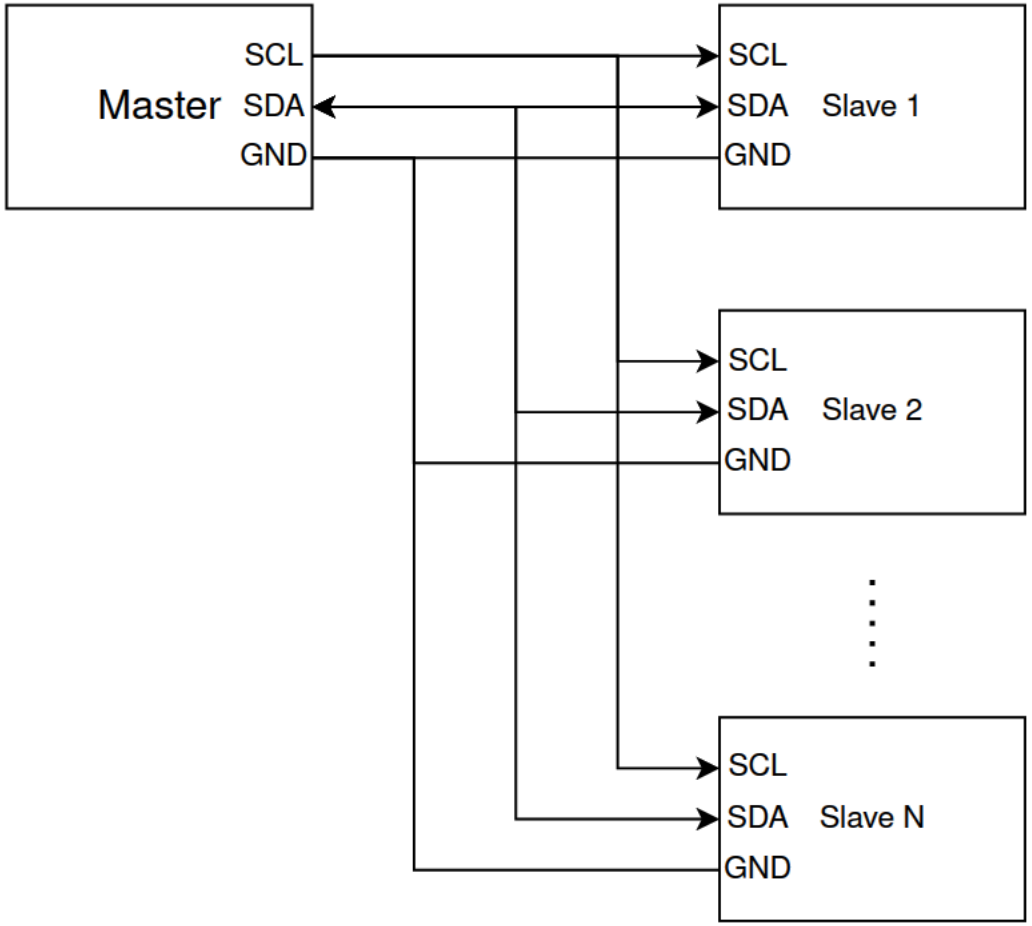


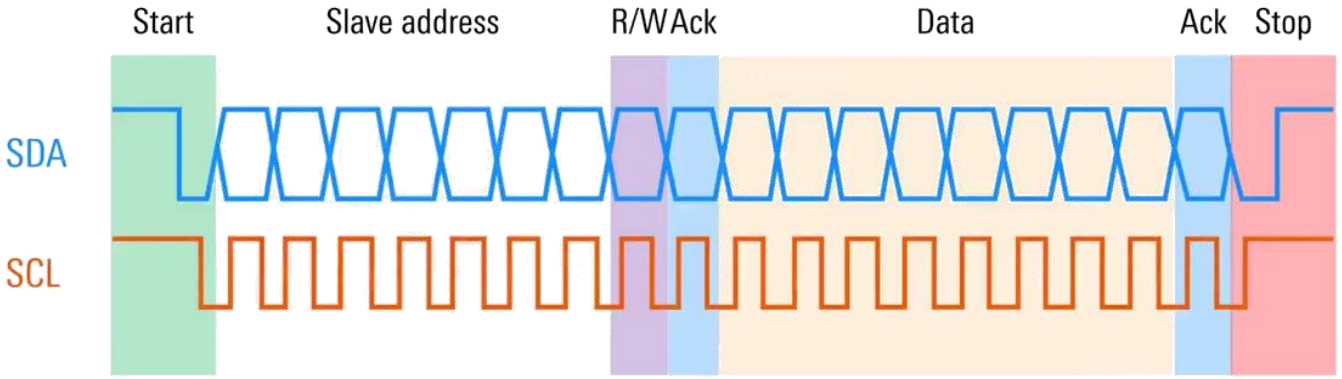


https://www.youtube.com/watch?v=CAvawEcxoPU

# SPI Bus

SPI is a **synchronous, full-duplex serial communication protocol** used primarily for high-speed communication between a single master and one or more slave devices. It is widely used in embedded systems for sensors, memory, and display interfaces.

SPI operates using **4 primary lines**:

- **MOSI** – Master Out, Slave In
- **MISO** – Master In, Slave Out
- **SCLK** – Serial Clock (generated by master)
- **SS/CS** – Slave Select / Chip Select (one per slave device)

**Communication Model**

- Master generates the clock and selects the target slave
- Communication is **full-duplex** – both parties transmit and receive simultaneously

Each transfer is synchronized by **SCLK**, with data shifted on clock edges

**Use Cases**

- High-speed peripherals: flash memory, LCDs, ADCs/DACs, SD cards
- Short-distance communication on PCBs
- Often used in sensor modules, embedded storage, or streaming data

# SPI Bus

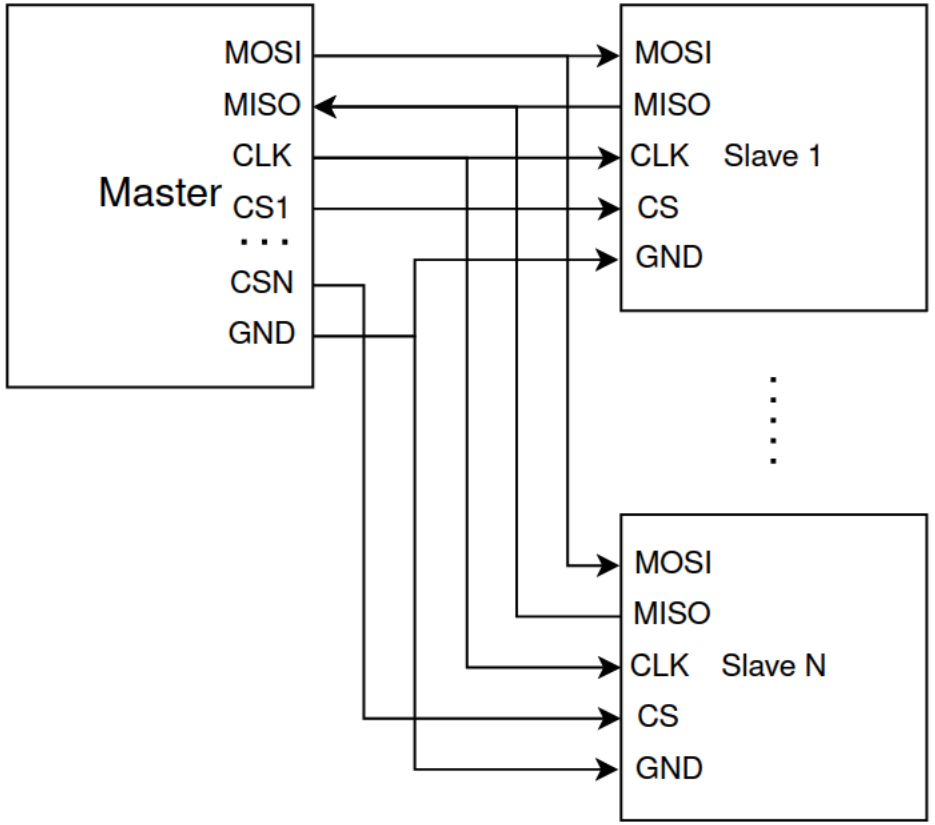


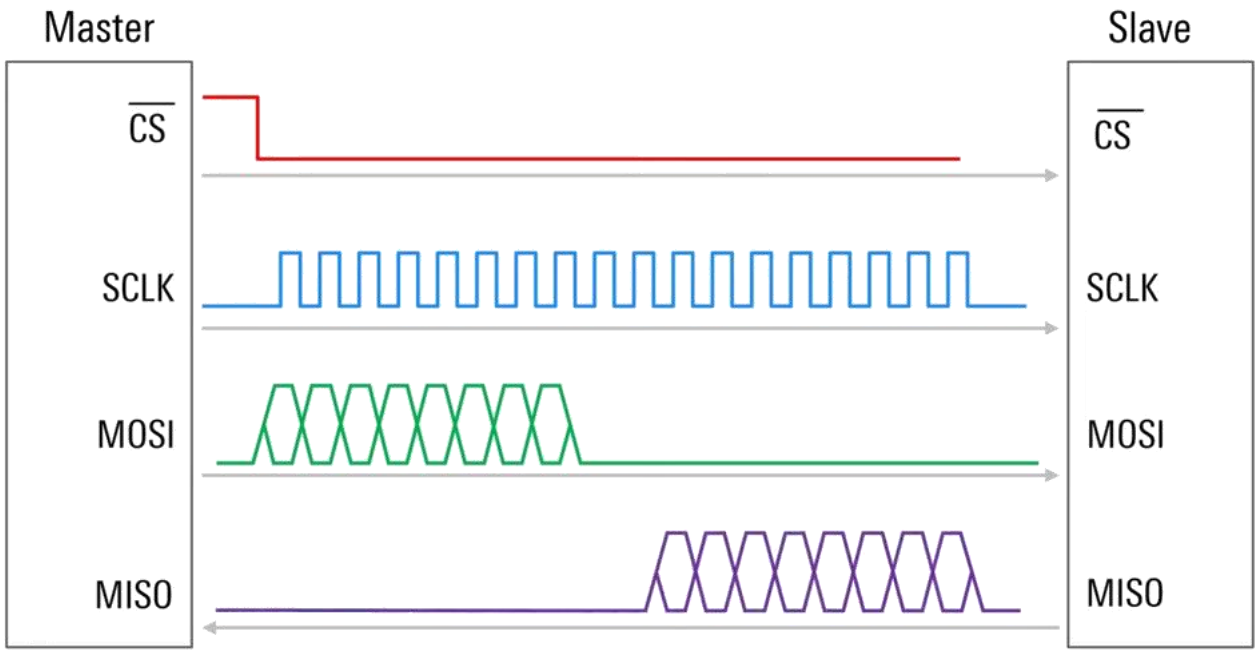


https://www.youtube.com/watch?v=0nVNwozXsIc

# Sensory Equipment

# Analog Digital Converter (ADC)

An **ADC** converts a **continuous analog voltage** signal into a **discrete digital value.**

**Key Parameters**

- **Resolution**: Number of bits in output (e.g., 8-bit, 12-bit, 16-bit)
  - Determines number of quantization levels: e.g., 8-bit = 256 levels, 12-bit = 4096 levels
- **Sampling Rate**: How often the analog signal is sampled (samples per second)
- **Input Voltage Range**: Minimum and maximum voltage that can be measured

**Conversion Process**

1. **Sampling**: ADC periodically captures the analog input voltage
2. **Quantization**: Maps the voltage to the nearest digital level
3. **Encoding**: Produces a binary representation of the level

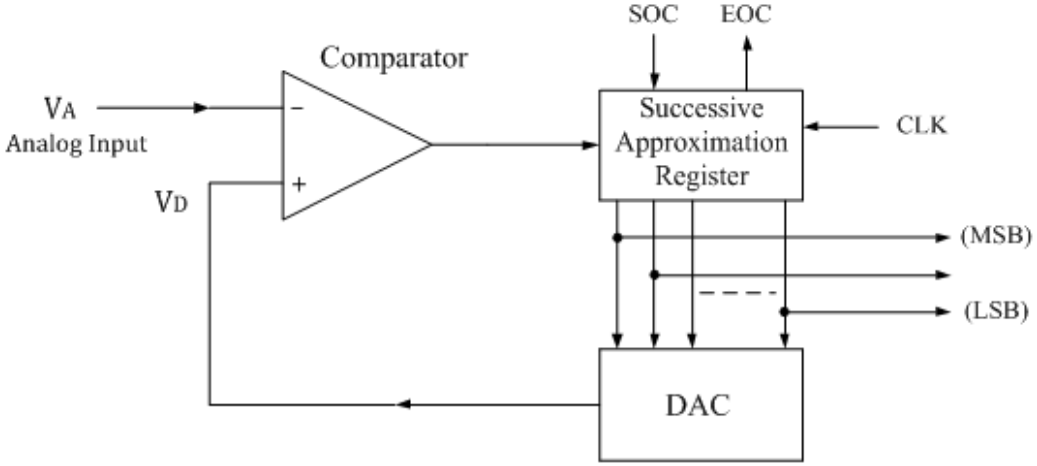


**Types of ADCs**

- **Successive Approximation (SAR)** – common in microcontrollers
- **Delta-Sigma** – high resolution, slower, used in audio and precision sensors
- **Flash ADC** – ultra-fast, low resolution, used in high-speed applications

https://www.electronics-tutorial.net/analog-integrated-circuits/data-converters/successive-approximation-type-adc/

# Encoder

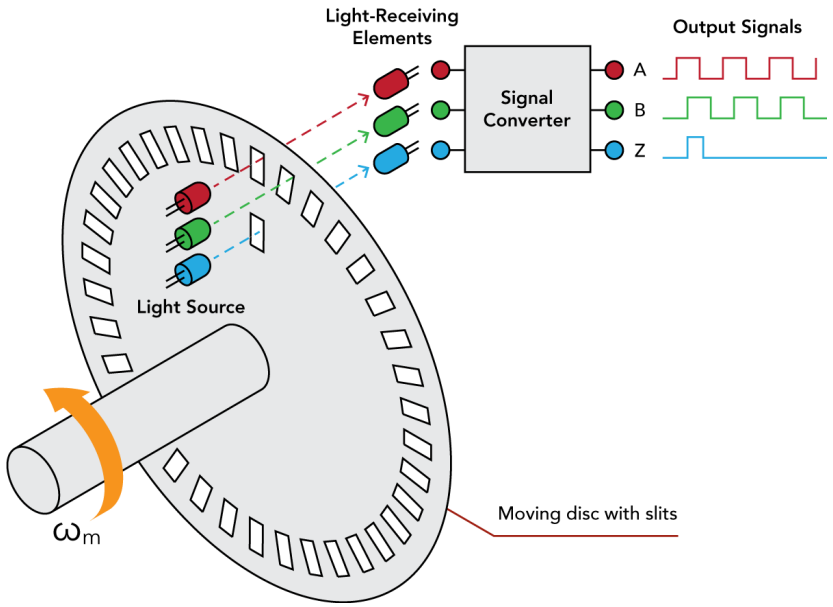


Quadrature Encoder

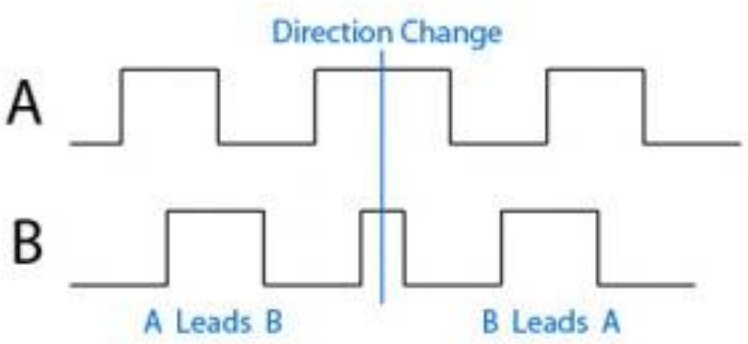


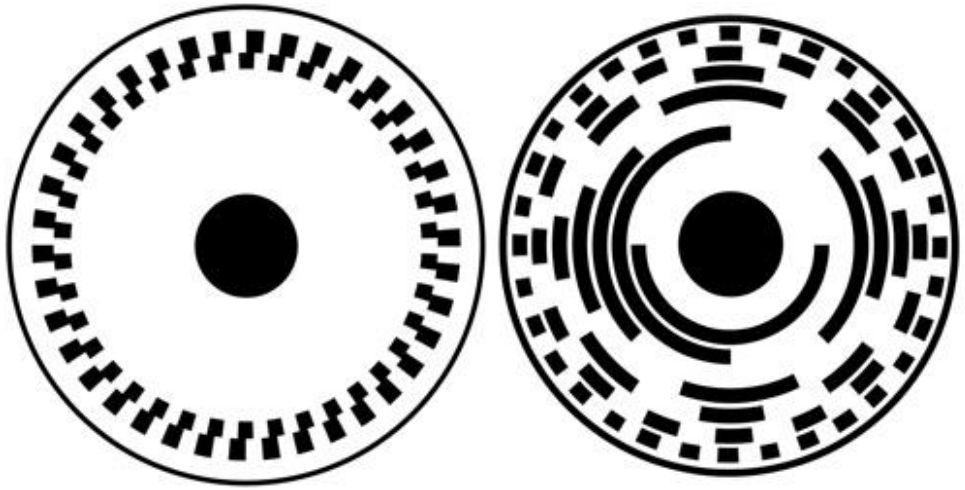

Relative vs Absolute

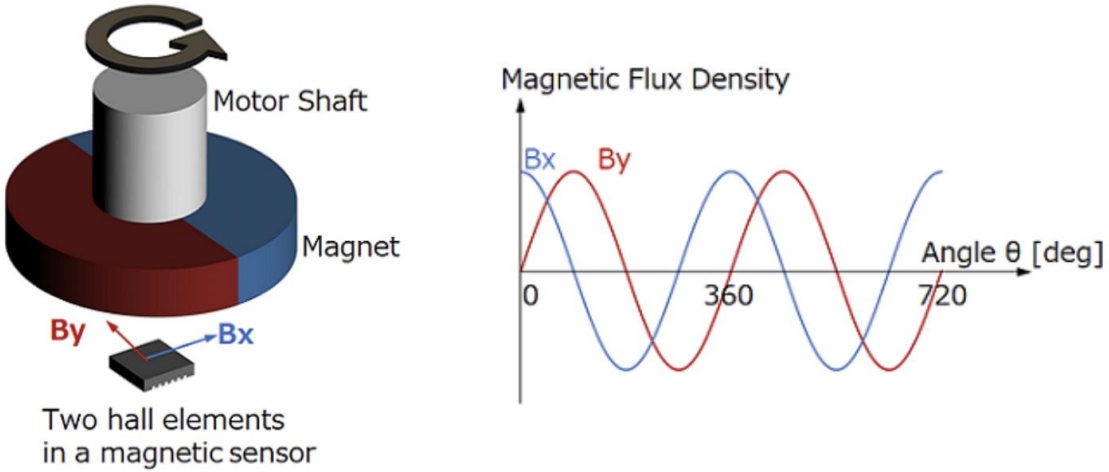


Magnetic Encoder

https://www.futek.com/Incremental-Encoder-Signal-Converter
https://www.phidgets.com/docs/Encoder_Guide
https://www.akm.com/global/en/products/rotation-angle-sensor/tutorial/magnetic-encoder/

# Line Sensor

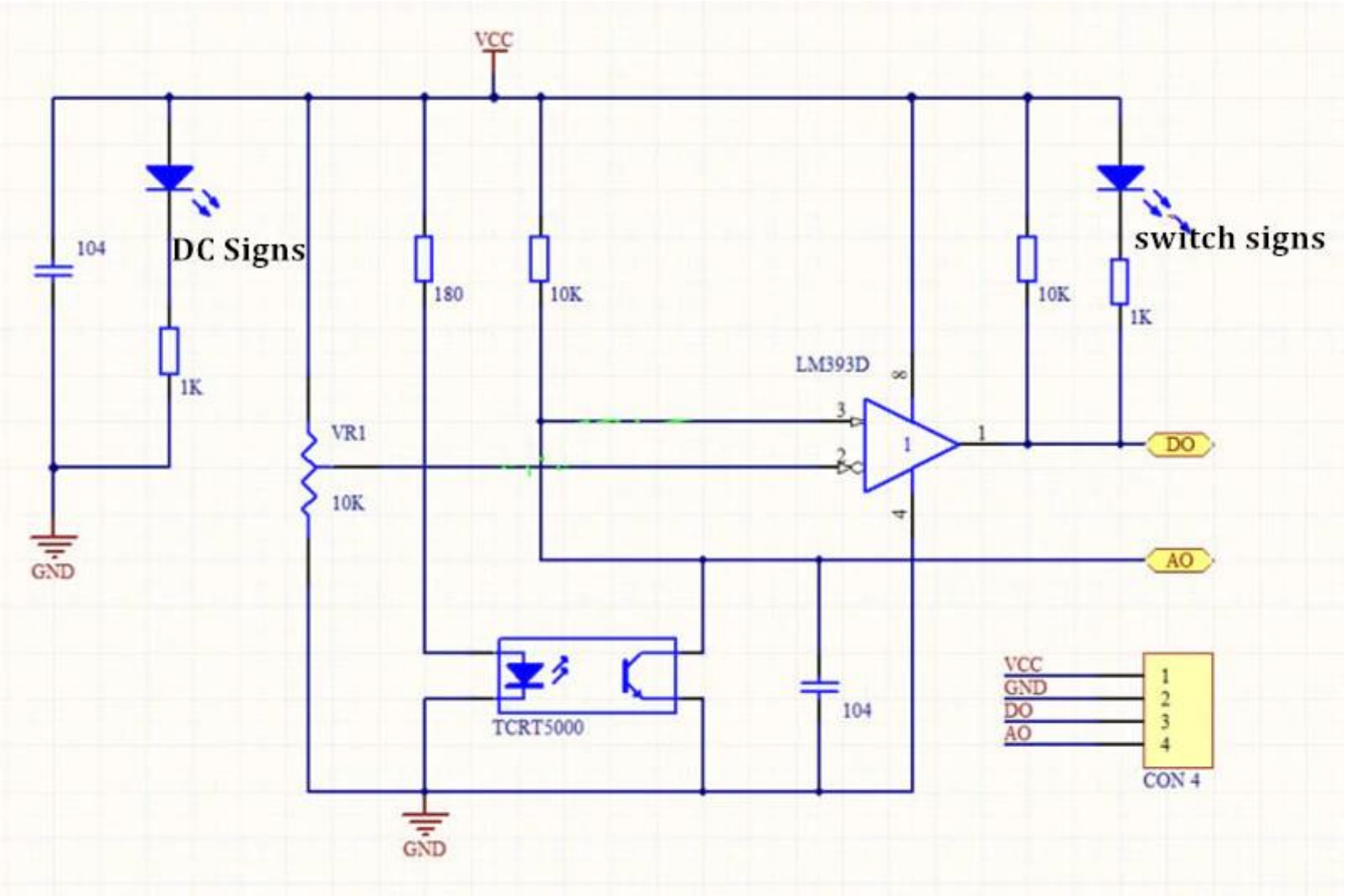


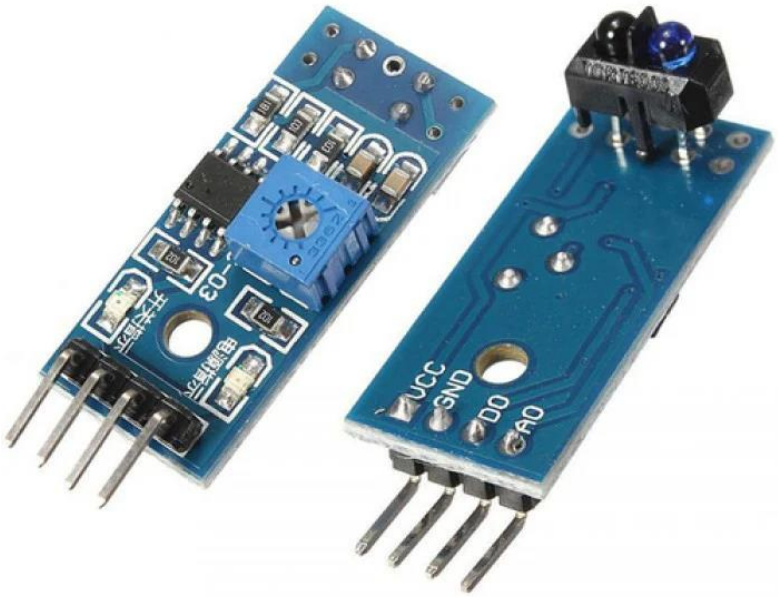


https://osoyoo.com/2017/08/15/tcrt5000-infrared-line-tracking-sensor/

# Ultrasound Proximity Sensor

- Trigger: 10 µs digital pulse
- Frequency: 40 kHz
- Measurement Resolution: 0.3cm
- Measurement Angle: up to 15 deg
- Detection distance: 2cm-400cm

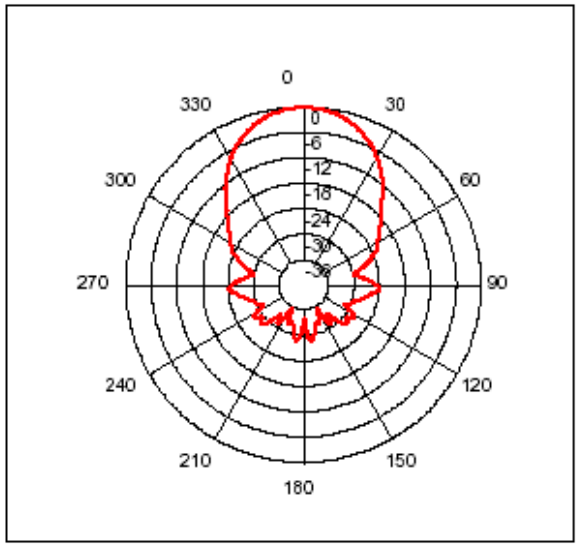


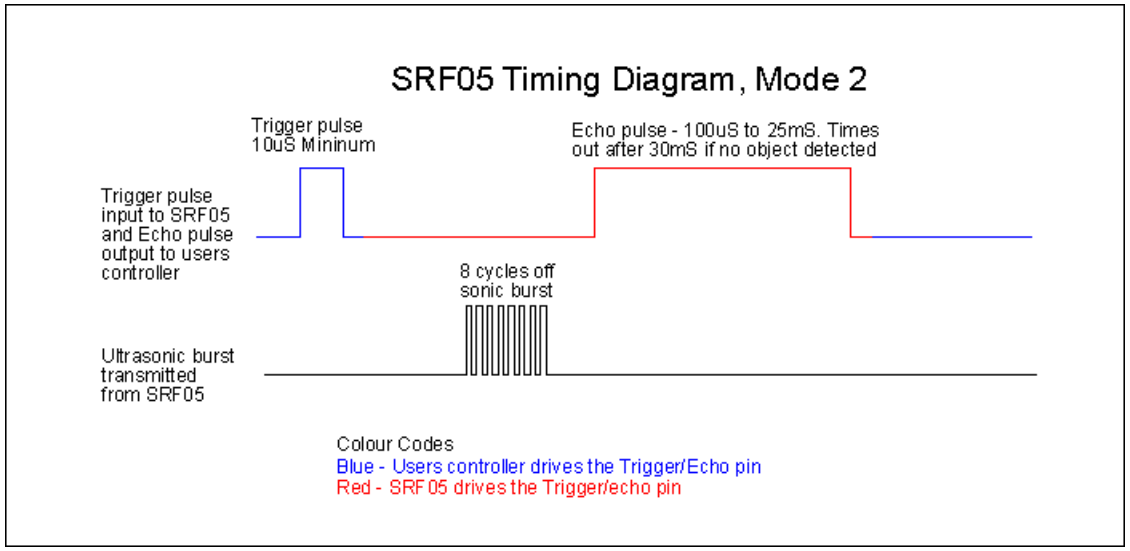


https://www.robot-electronics.co.uk/htm/srf05tech.htm

# Light Detection And Ranging (LiDAR)

Triangulation based laser distance scanner

- Distance range: 0.15-12m
- Angular range: 360 deg
- Scan rate: ~6Hz (up to 10)

ROS 2 message definition:

https://docs.ros2.org/humble/api/sensor_msgs/msg/LaserScan.html

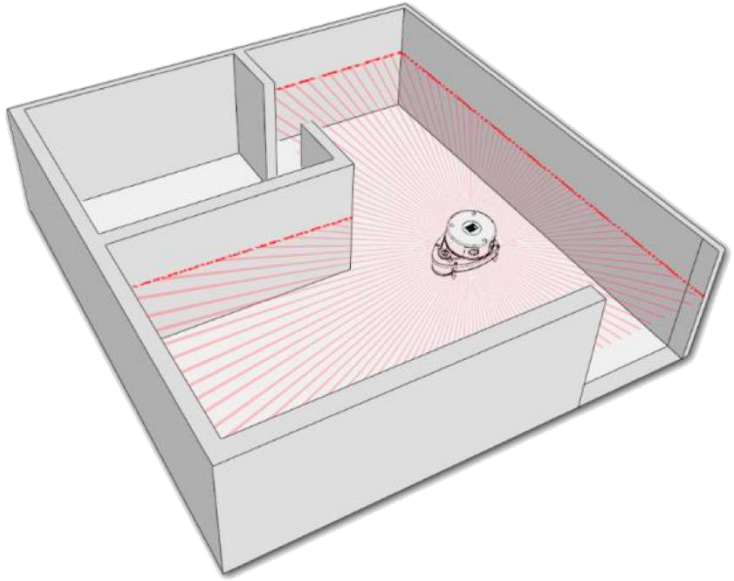

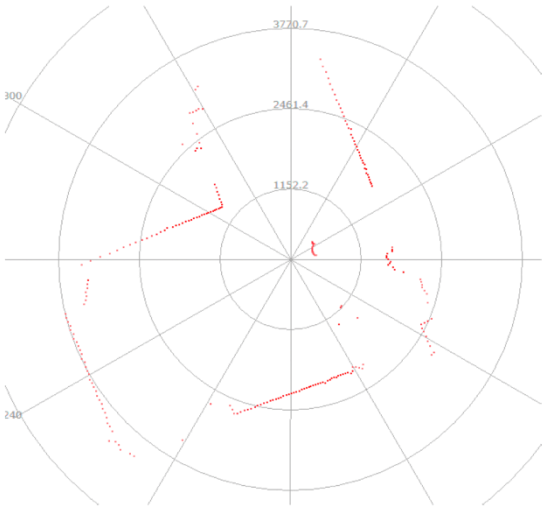


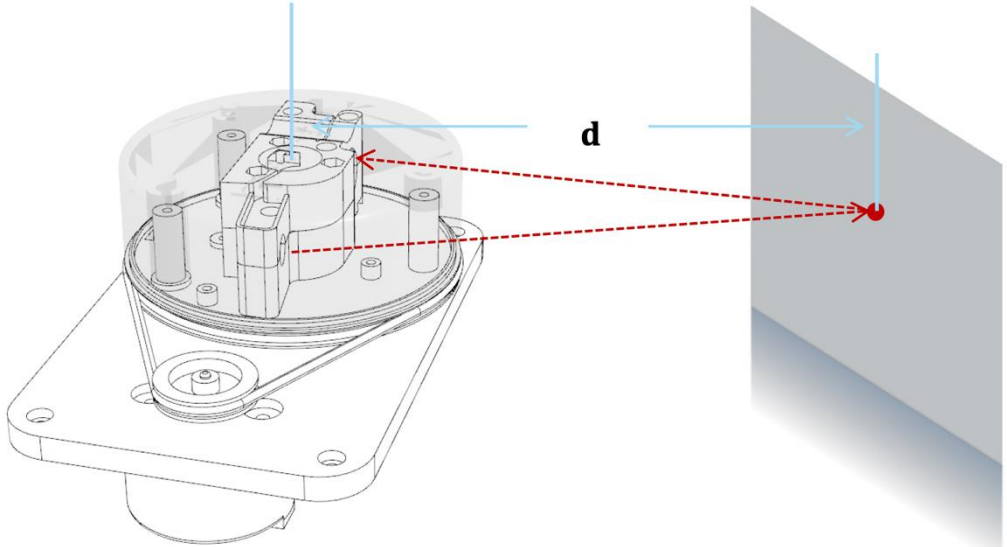


http://bucket.download.slamtec.com/b90ae0a89feba3756bc5aaa0654c296dc76ba3ff/LD108_SLAMTEC_rplidar_datasheet_A1M8_v2.2_en.pdf

# Inertial Measurement Unit (IMU)

**MPU6050** is a 6-axis motion tracking device.
Combines a **3-axis gyroscope** and **3-axis accelerometer** on a single chip.

Chip price ~1USD

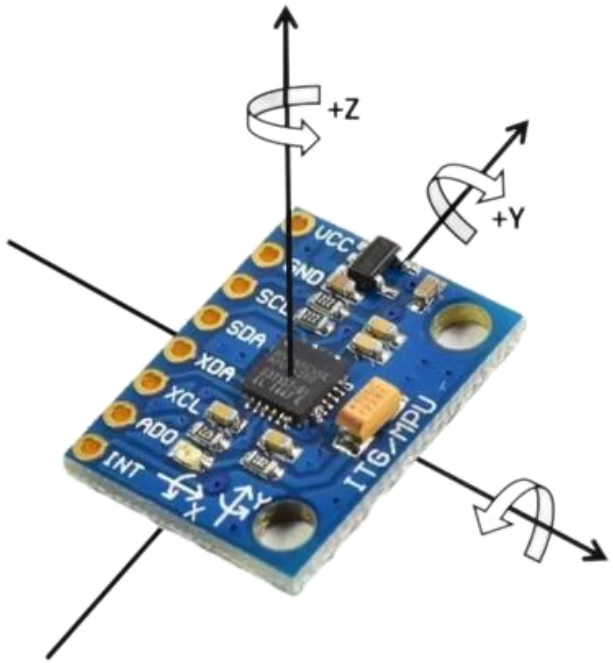


**3-Axis Accelerometer**

- Selectable range: **±2g, ±4g, ±8g, ±16g**

**3-Axis Gyroscope**

- Selectable range: **±250, ±500, ±1000, ±2000 °/s**

**Digital Motion Processor (DMP)**

- Built-in processor that can compute orientation (pitch, roll, yaw) internally
- Note: Without a magnetometer, yaw estimation drifts over time
- Reduces load on host microcontroller

**I²C Communication**

- Default address: **0x68**

**Interrupt Support**

- Configurable interrupt pins for motion detection, data ready, FIFO overflow

https://github.com/ElectronicCats/mpu6050

# Exam Step by Step

# Corridor Following

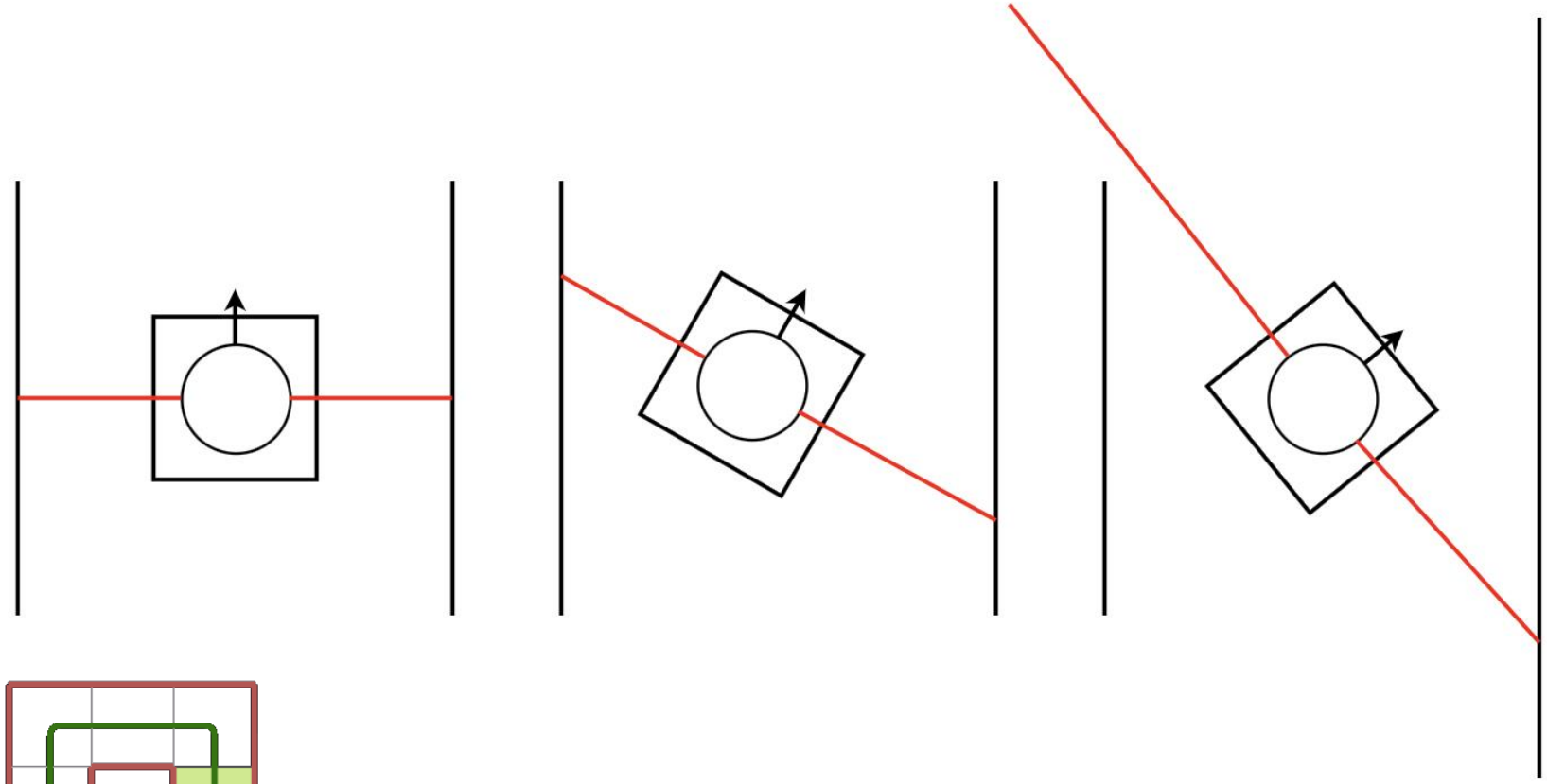

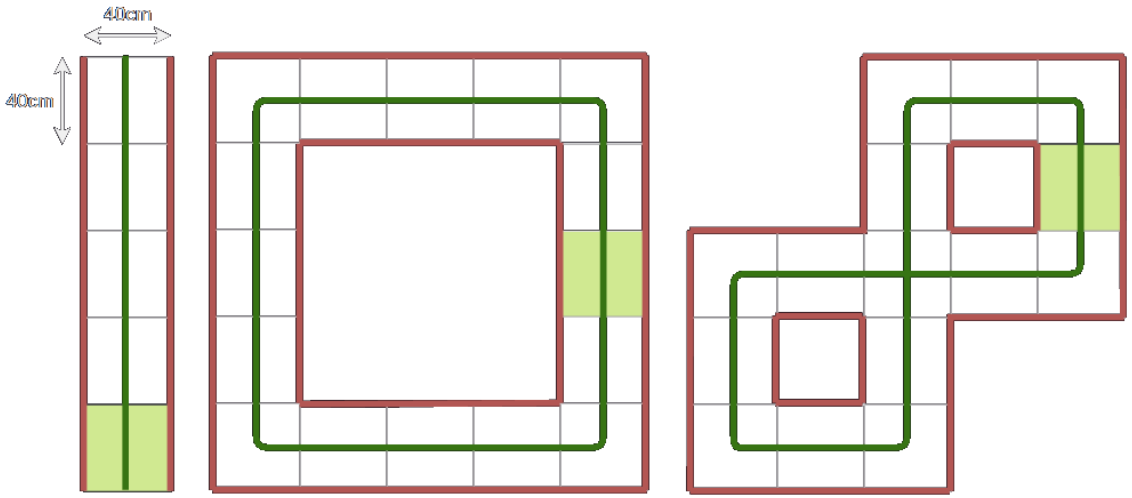


https://robotics-but.github.io/BPC-PRP/2_labs/text/12_lab.html

# Cell Crossing Detection

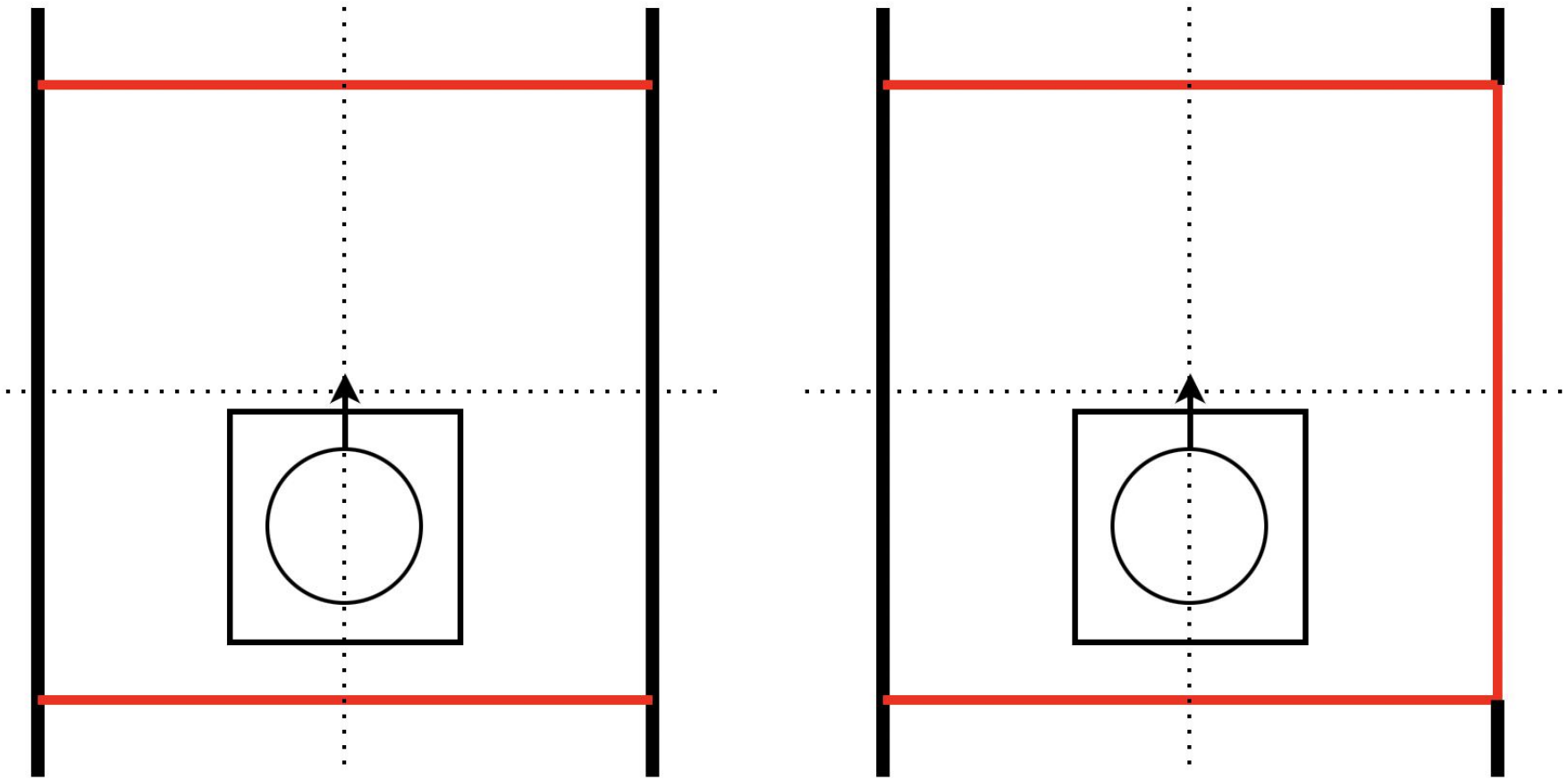

# Robot On Place Rotation

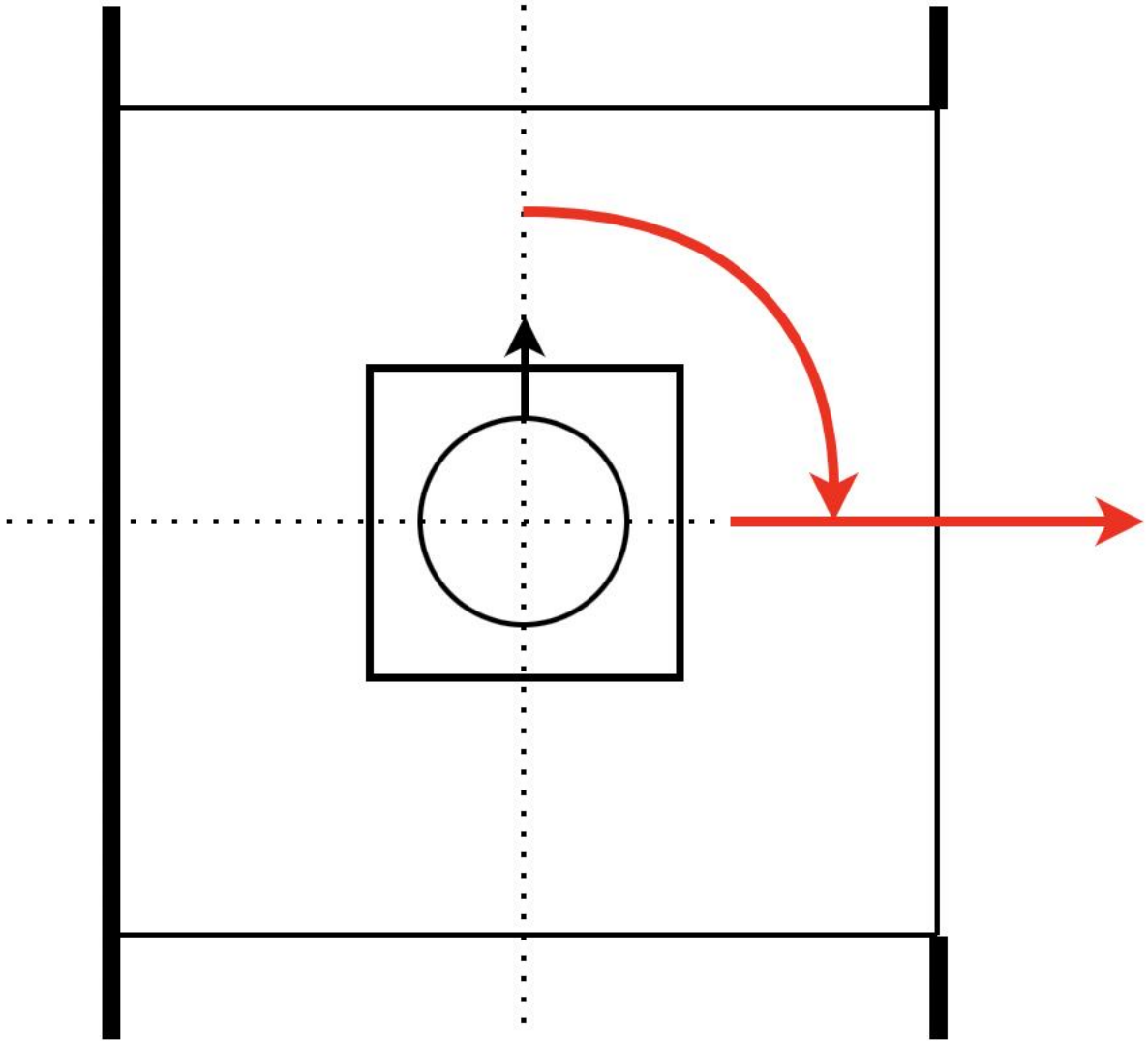

# Following Optimal Way (Aruco Markers)

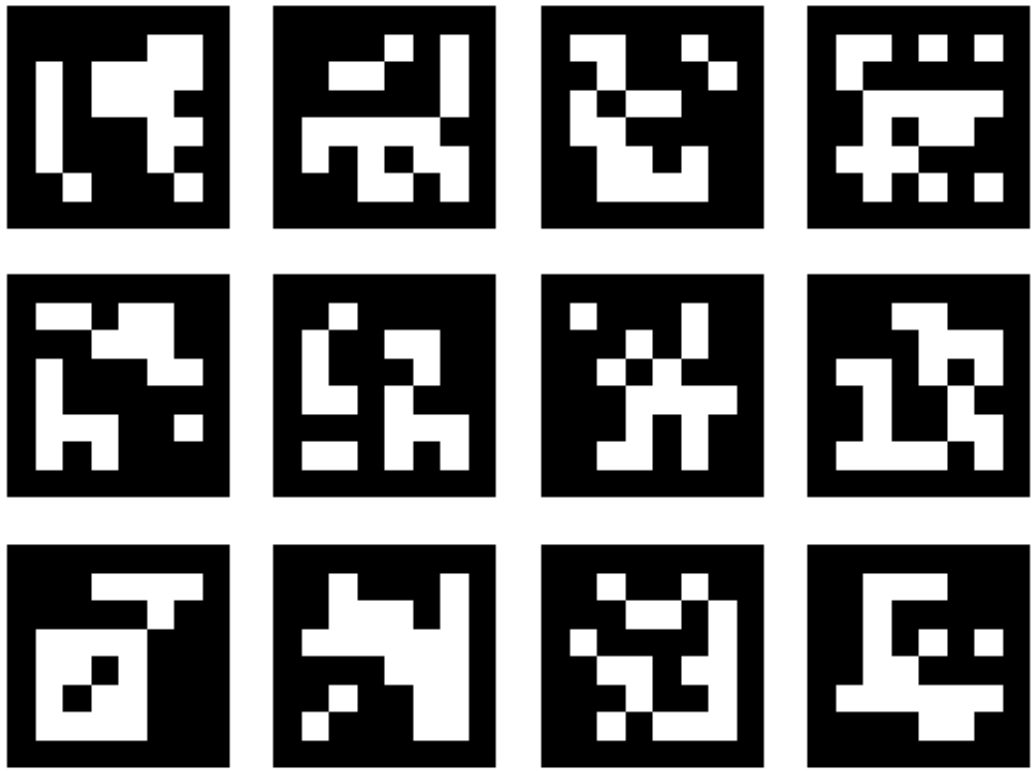

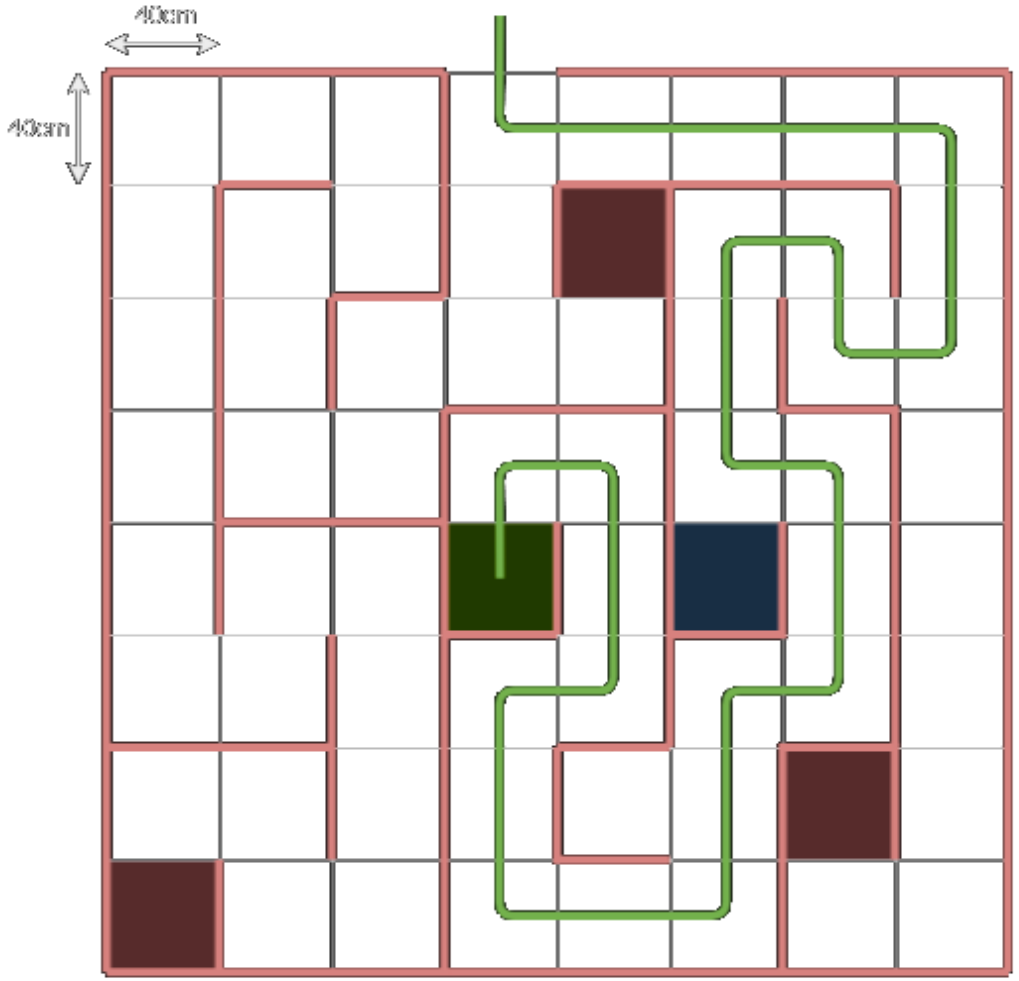


https://robotics-but.github.io/BPC-PRP/2_labs/text/13_exam.html

# Threading

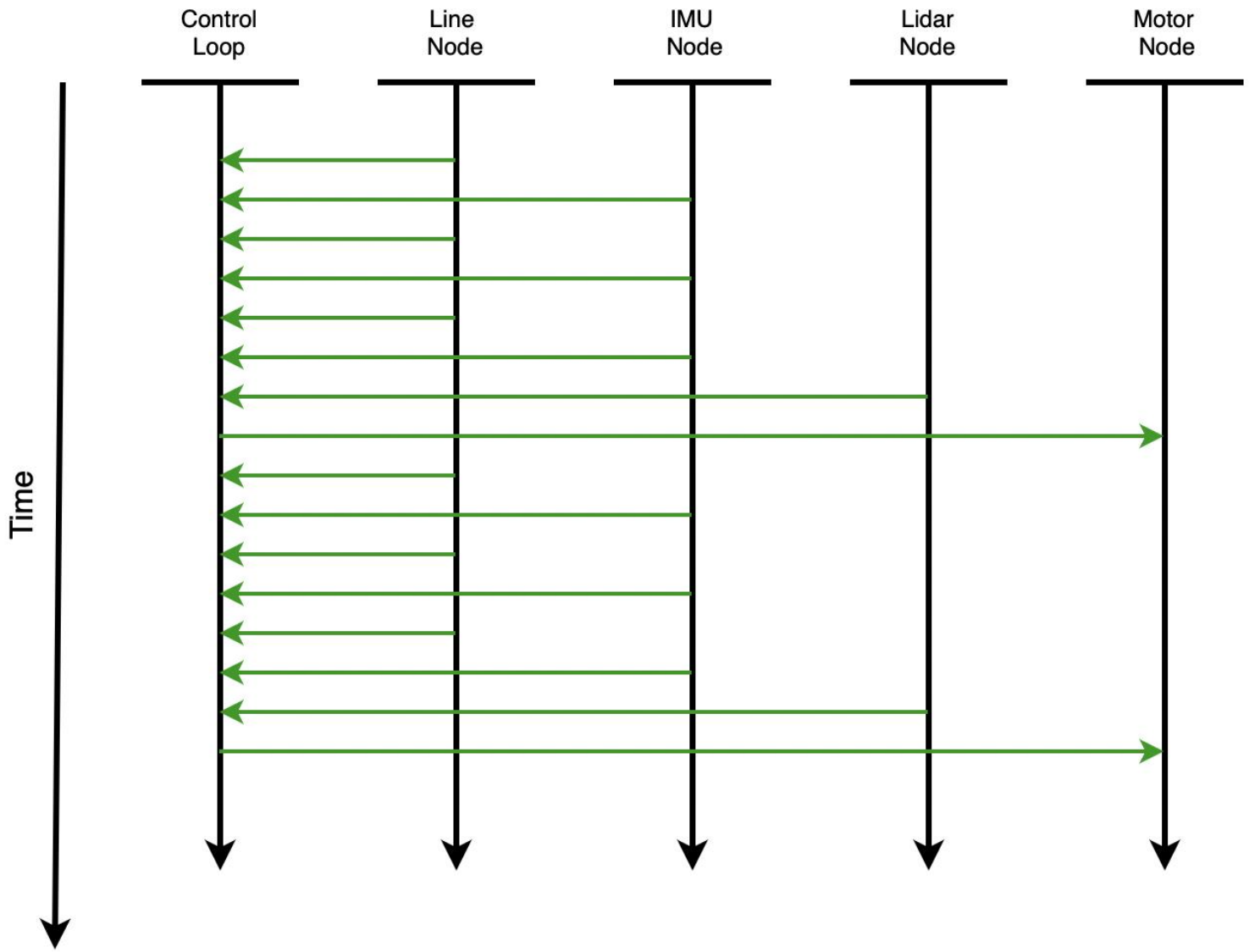

# Software Encapsulation

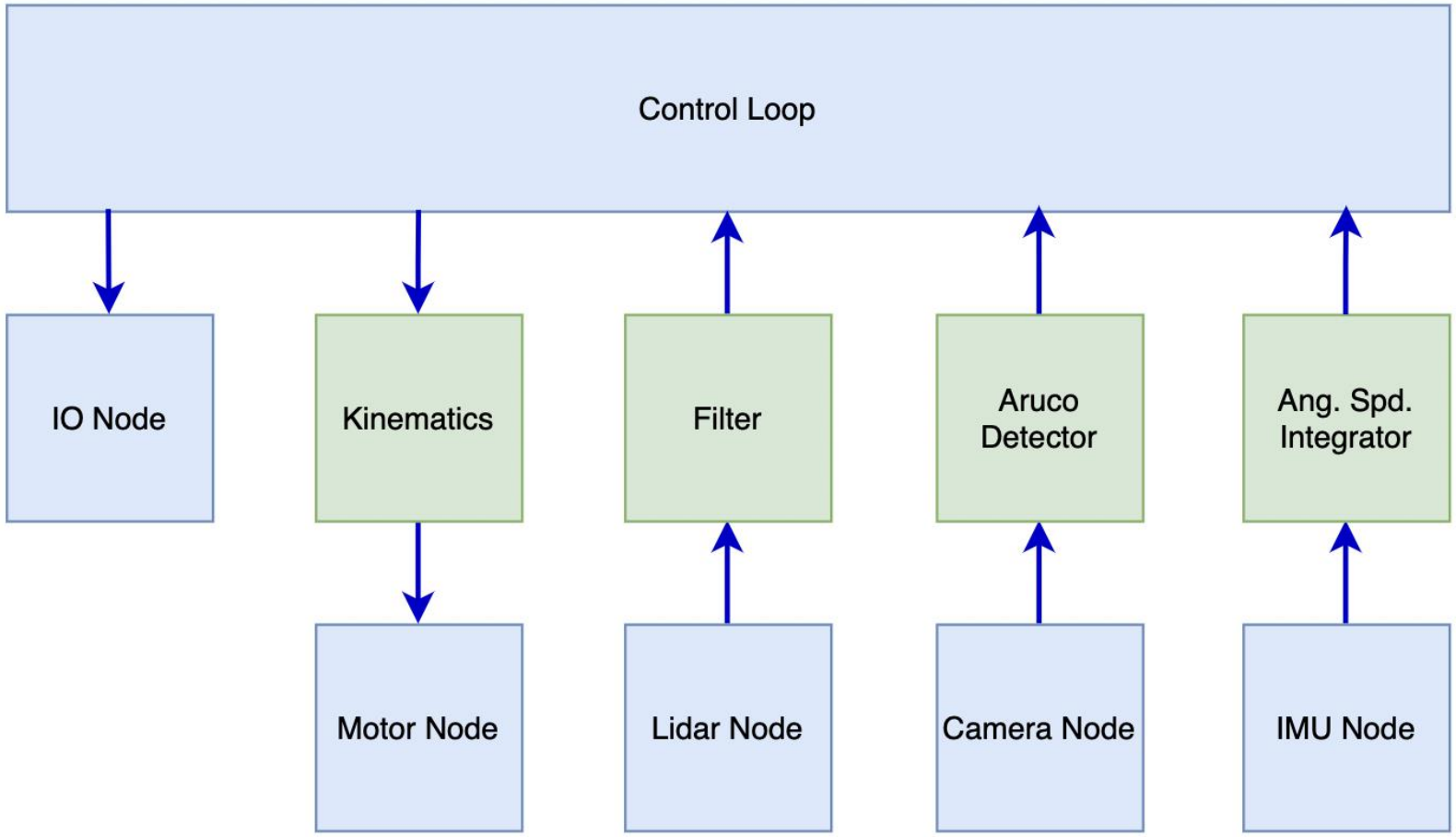

Adam Ligocki

ligocki@vutbr.cz

https://www.linkedin.com/in/adamligocki/

https://github.com/adamek727

Robotics and AI Research Group

https://github.com/Robotics-BUT

Brno University of Technology
Faculty of Electrical Engineering and Communication
Department of Control and Instrumentation