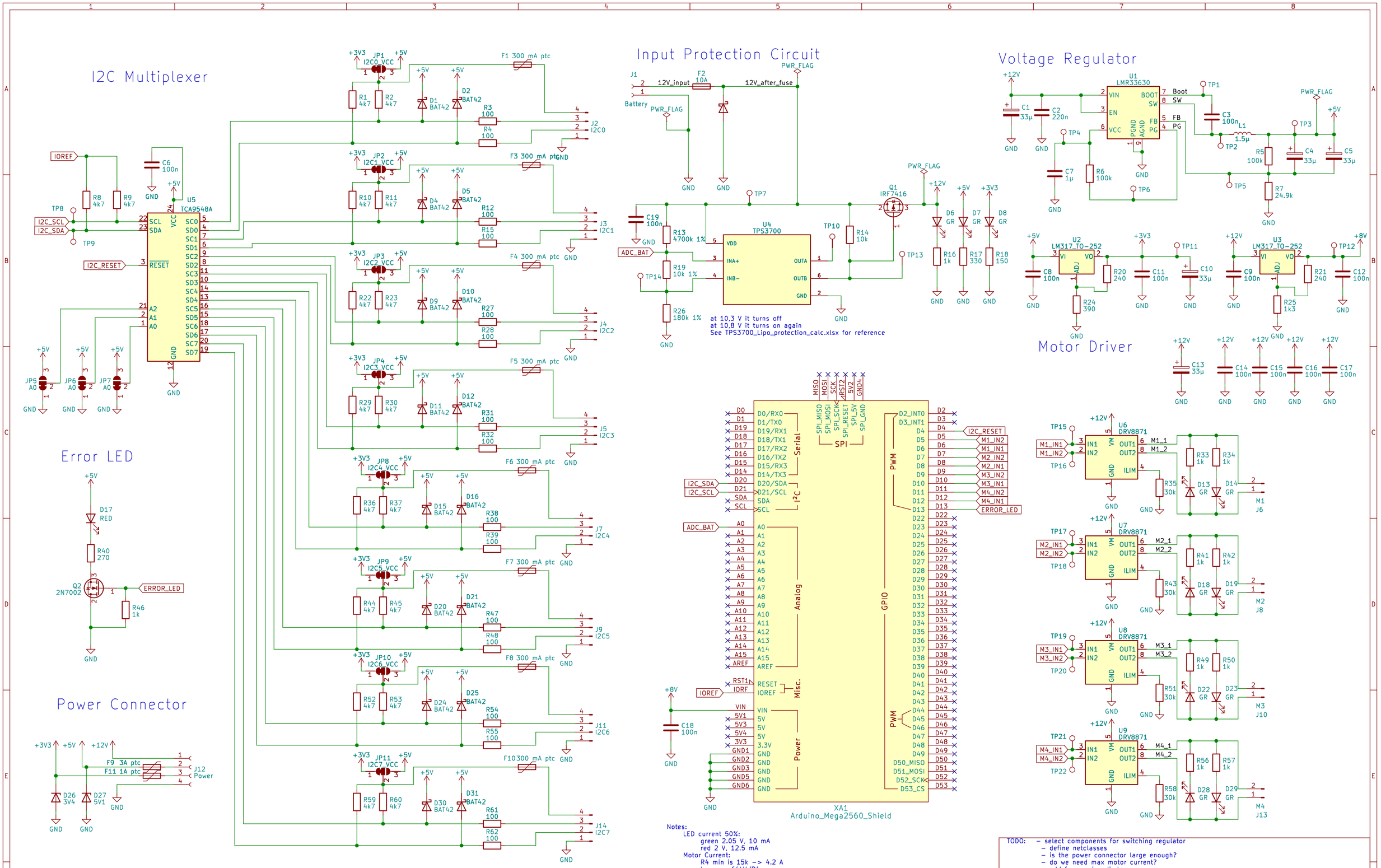
I2C Multiplexer
Input Protection Circuit
Voltage Regulator
Motor Driver
Error LED
Power Connector
U5 TCA9548A
U4 TPS3700
U1 LMR33630
U2 LM317_TO-252
U3 LM317_TO-252
Q1 IRF7416
Q2 2N7002
U6 DRV8871
U7 DRV8871
U8 DRV8871
U9 DRV8871
XA1 Arduino_Mega2560_Shield
at 10.3 V it turns off
at 10.8 V it turns on again
See TPS3700_Lipo_protection_calc.xlsx for reference
Notes:
LED current 50%:
green 2.05 V, 10 mA
red 2 V, 12.5 mA
Motor Current:
R4 min is 15k -> 4.2 A
I_max = 64kV/R4
TODO: - select components for switching regulator
- define netclasses
- is the power connector large enough?
- do we need max motor current?
- add freerunning diodes
RoCCI e.V.
Sheet: /
File: RocciShield.kicad_sch
Title: RoCCI Shield
Size: A3
Date: 2023-06-23
Rev: 0.4
KiCad E.D.A. kicad 7.0.2
Id: 1/1