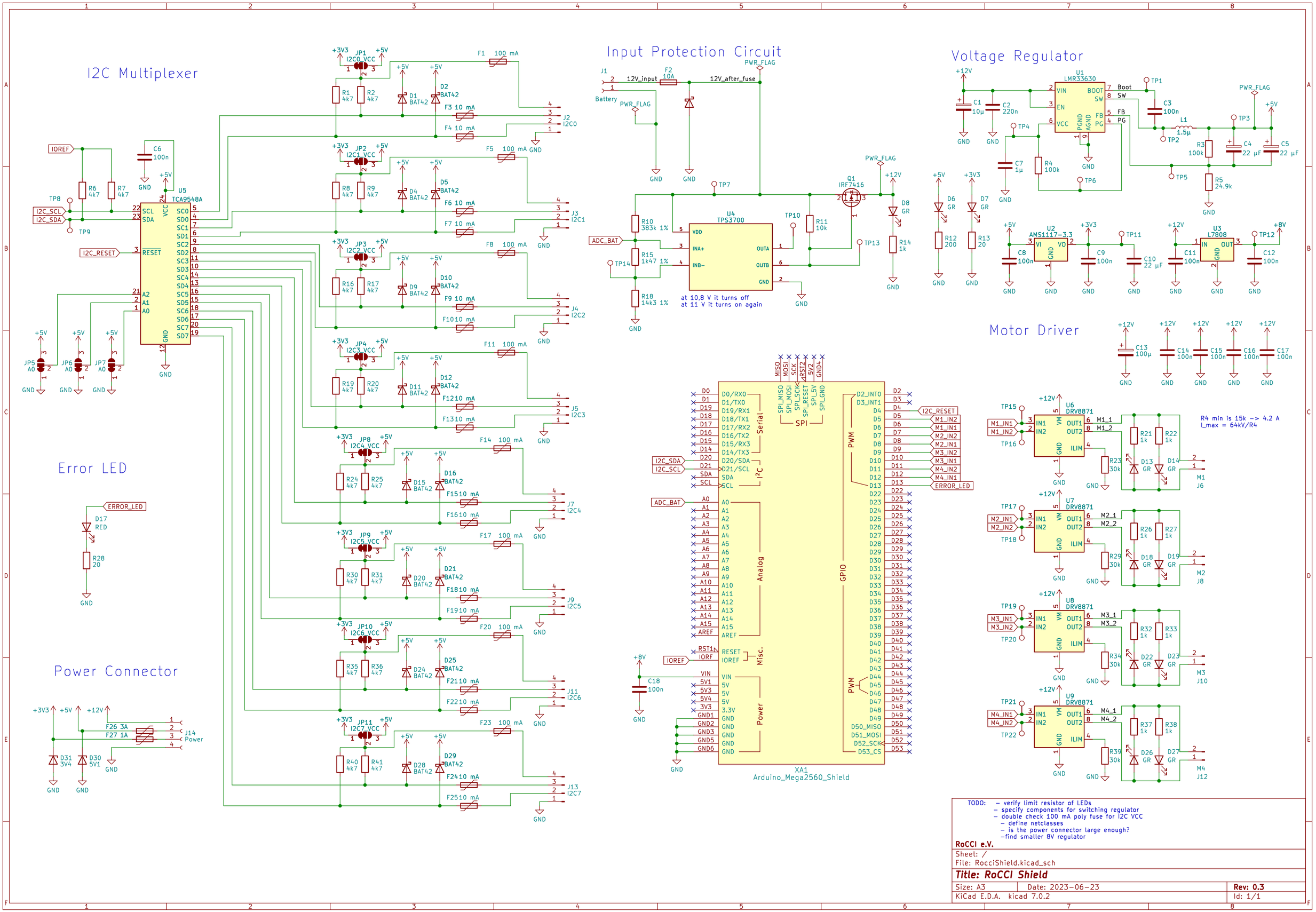
I2C Multiplexer
Input Protection Circuit
Voltage Regulator
Motor Driver
Error LED
Power Connector
U5 TCA9548A
U4 TPS3700
at 10,8 V it turns off
at 11 V it turns on again
Q1 IRF7416
U1 LMR33630
U2 AMS1117-3.3
U3 L7808
U6 DRV8871
U7 DRV8871
U8 DRV8871
U9 DRV8871
R4 min is 15k -> 4.2 A
I_max = 64kV/R4
XA1
Arduino_Mega2560_Shield
TODO: - verify limit resistor of LEDs
- specify components for switching regulator
- double check 100 mA poly fuse for I2C VCC
- define netclasses
- is the power connector large enough?
-find smaller 8V regulator
RoCCI e.V.
Sheet: /
File: RocciShield.kicad_sch
Title: RoCCI Shield
Size: A3
Date: 2023-06-23
Rev: 0.3
KiCad E.D.A. kicad 7.0.2
Id: 1/1