SemesterProsjekt

03 November 2022 10:50

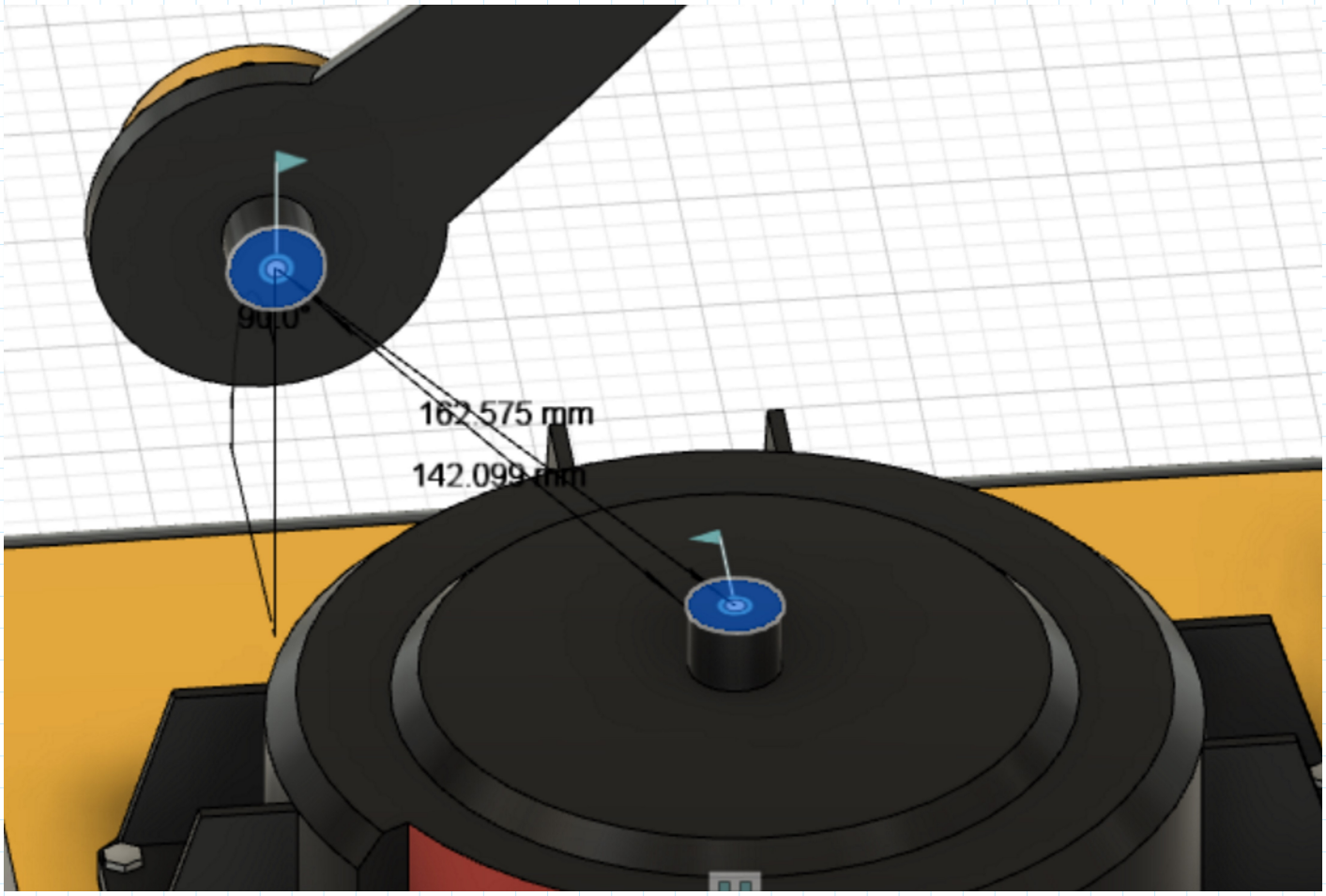

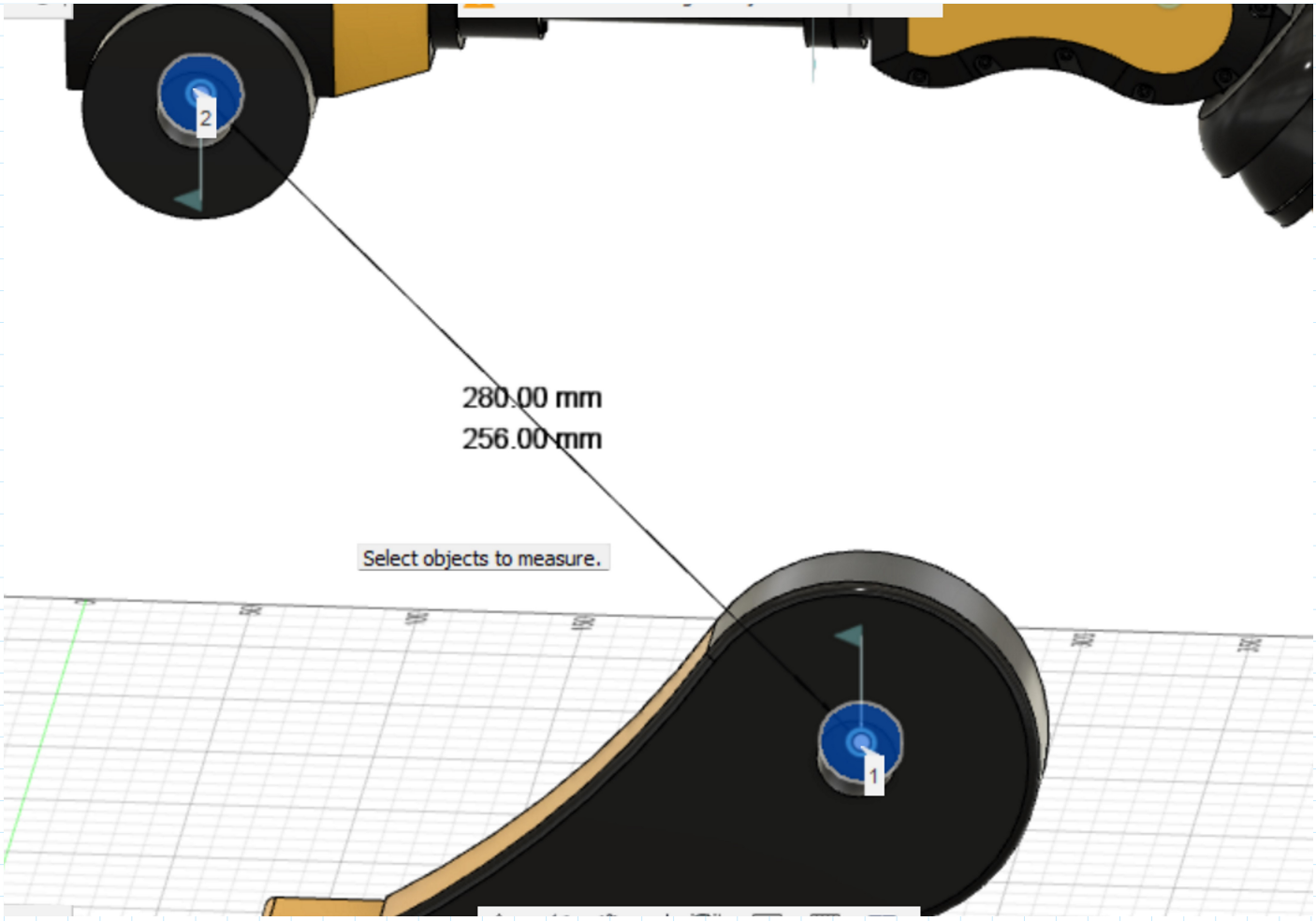
2
280.00 mm
256.00 mm
Select objects to measure.
1

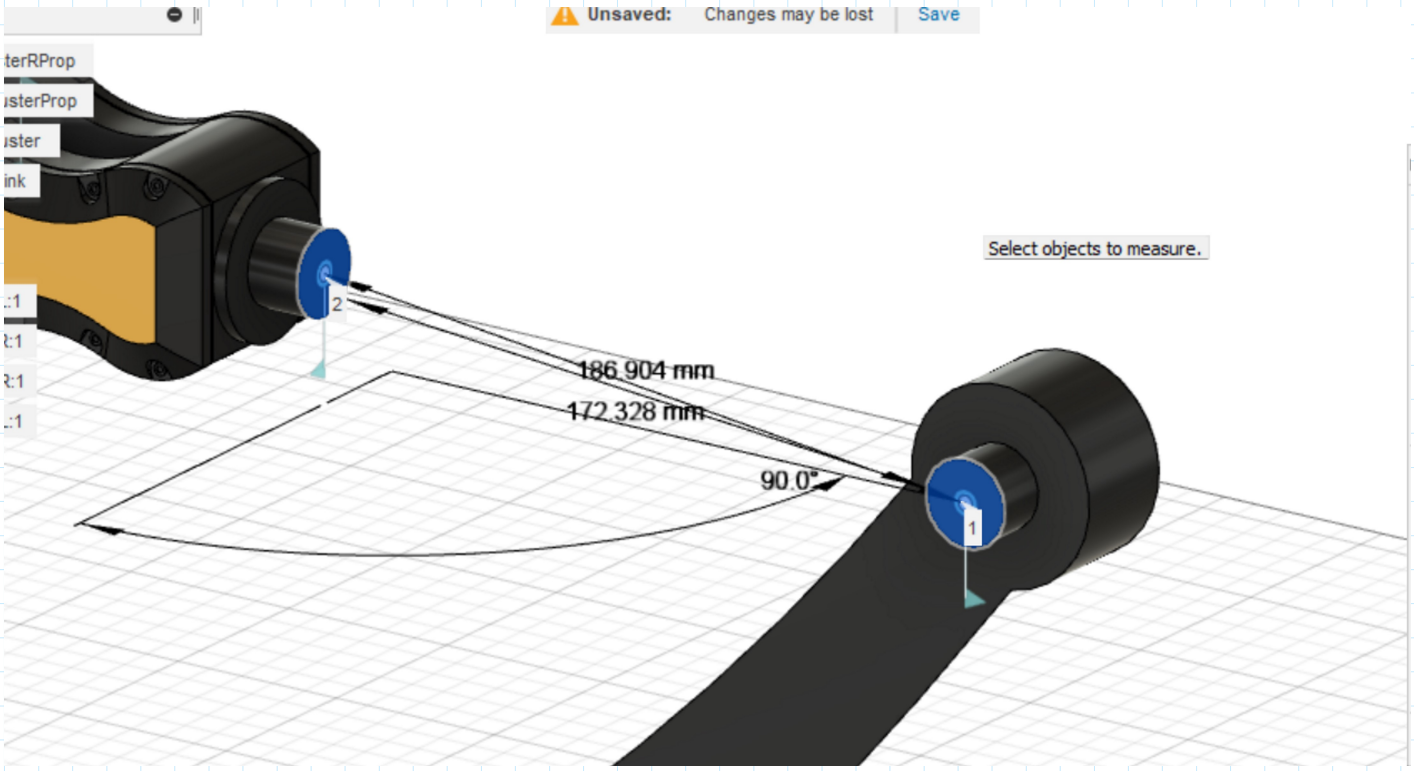
Unsaved:
Changes may be lost
Save
terRProp
sterProp
ster
ink
Select objects to measure.
2
186.904 mm
172.328 mm
90.0°
1

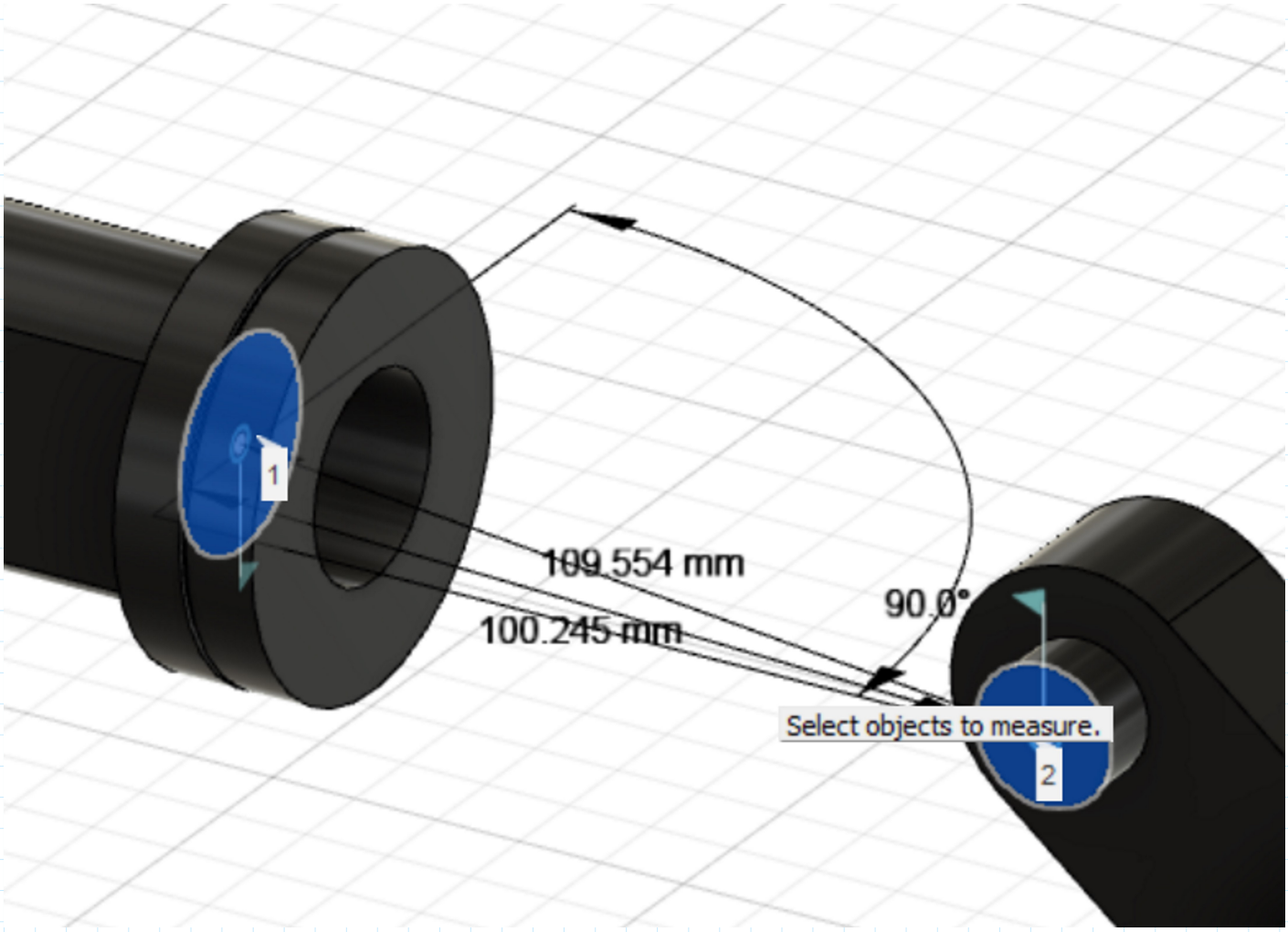
1
109.554 mm
100.245 mm
90.0°
Select objects to measure.
2

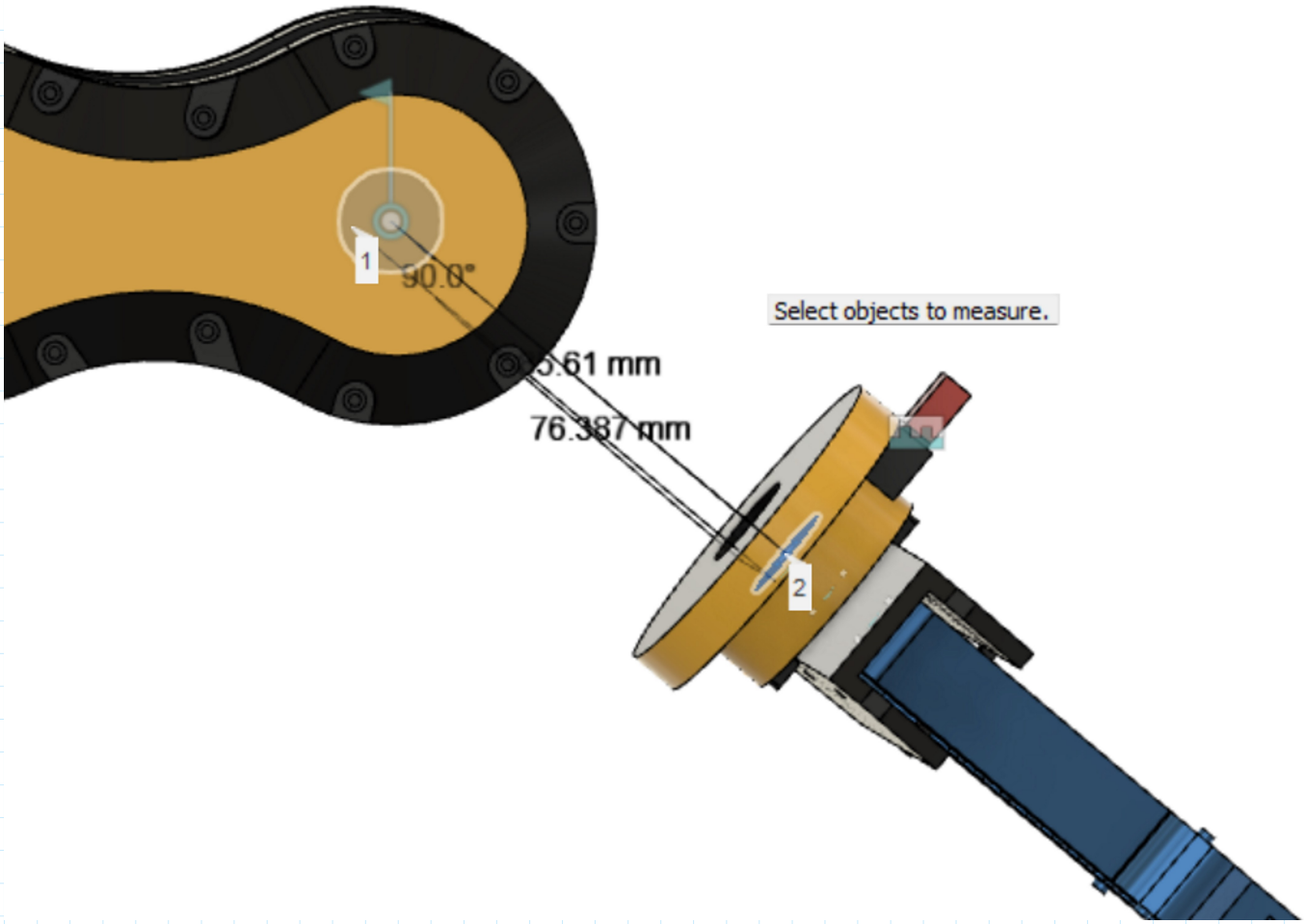
1
90.0°
Select objects to measure.
5.61 mm
76.387 mm
2

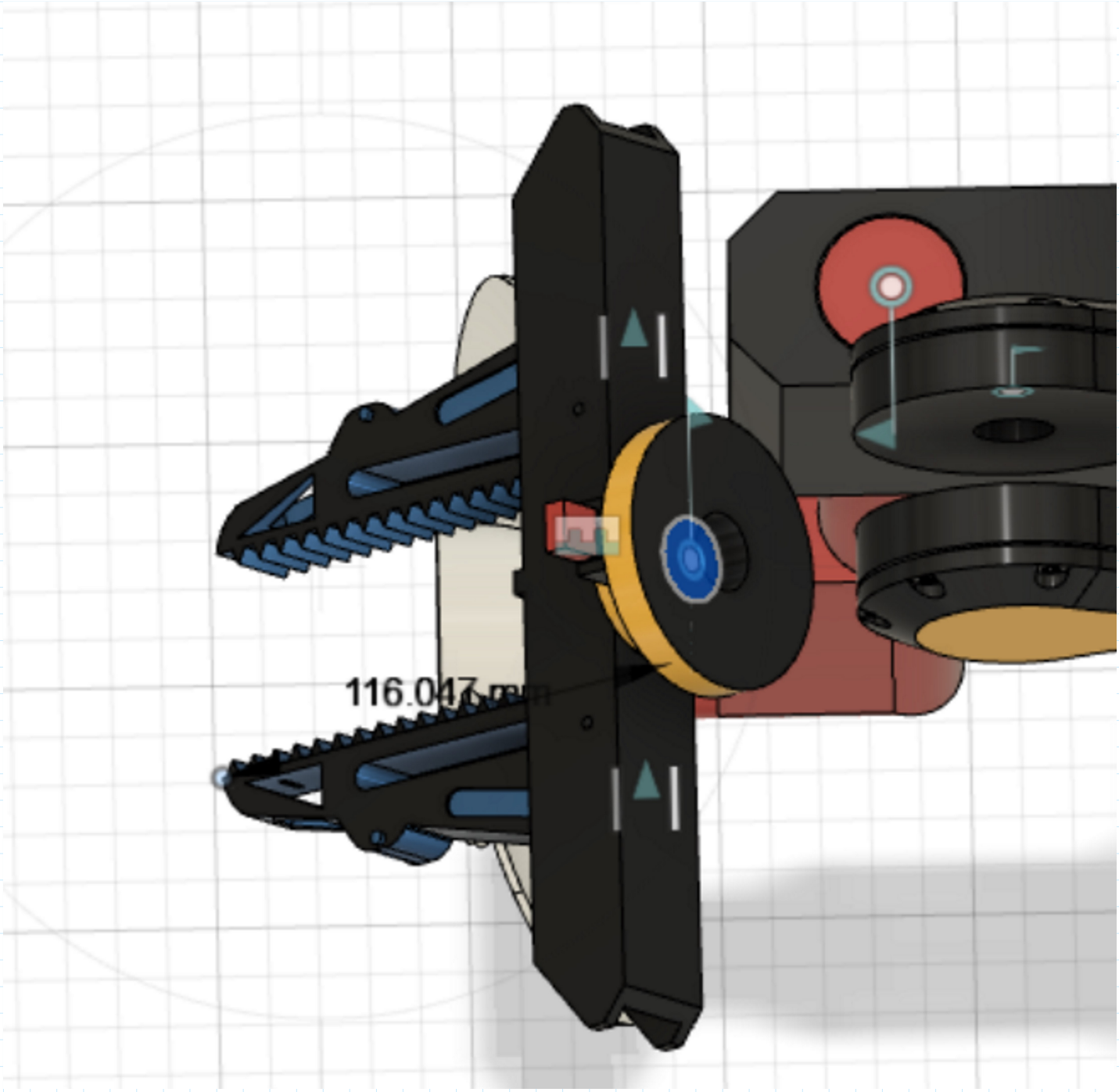
116.047 mm

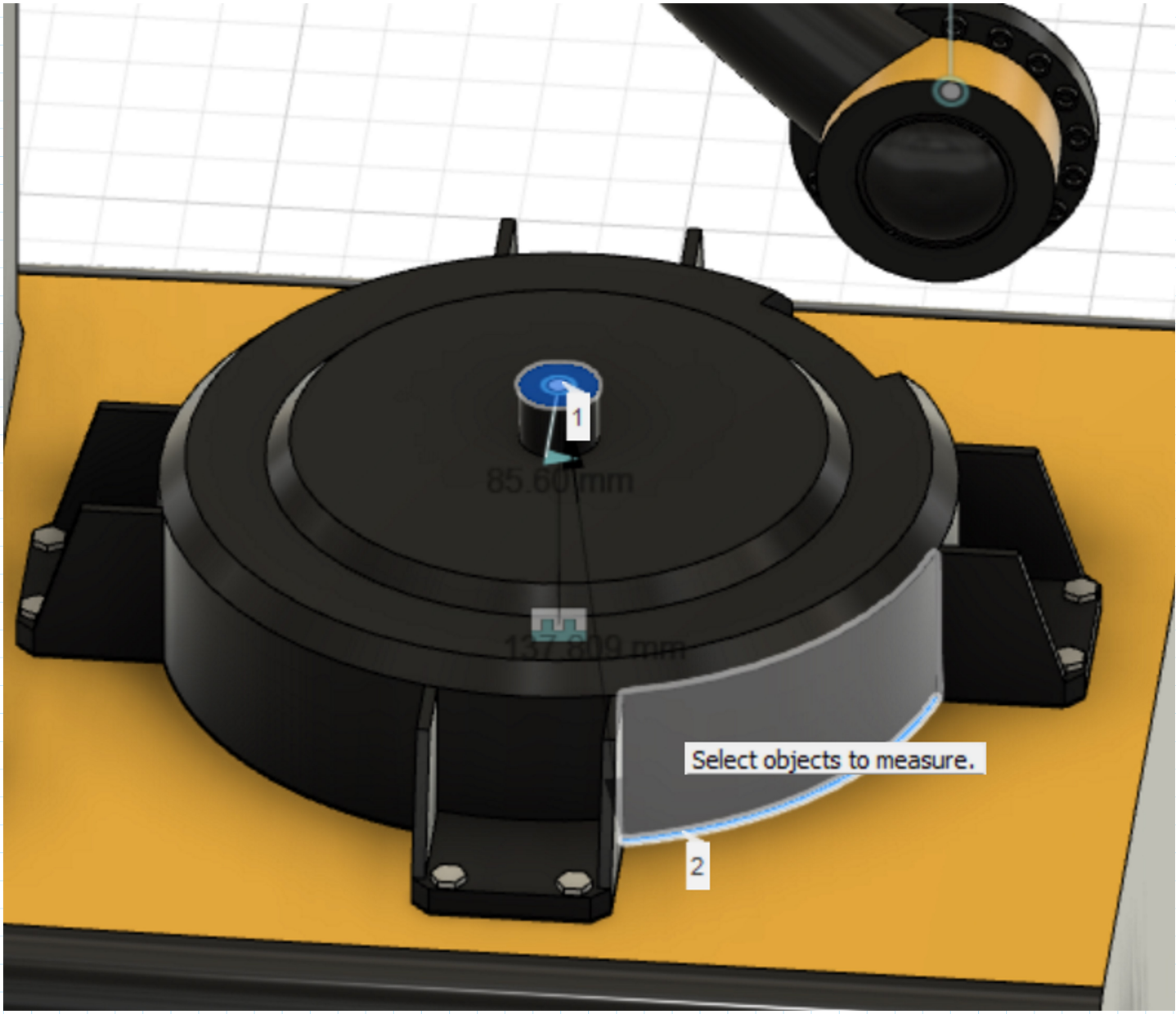
1
85.60 mm
137.609 mm
Select objects to measure.
2