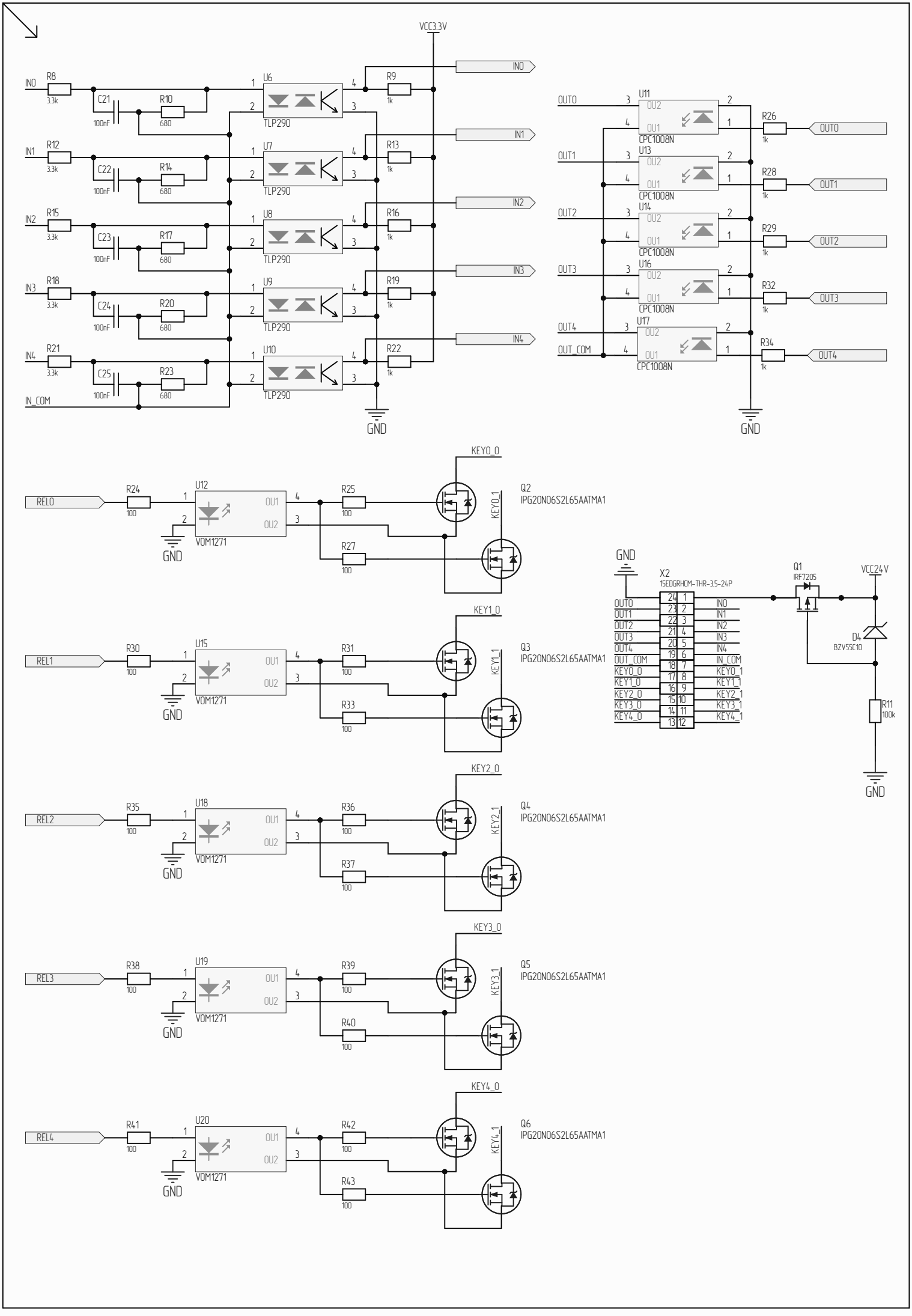
VCC3.3V
IN0
IN1
IN2
IN3
IN4
IN_COM
R8
R12
R15
R18
R21
3.3k
C21
C22
C23
C24
C25
100nF
R10
R14
R17
R20
R23
680
U6
U7
U8
U9
U10
TLP290
R9
R13
R16
R19
R22
1k
GND
OUT0
OUT1
OUT2
OUT3
OUT4
OUT_COM
U11
U13
U14
U16
U17
OU2
OU1
CPC1008N
R26
R28
R29
R32
R34
REL0
REL1
REL2
REL3
REL4
R24
R30
R35
R38
R41
100
U12
U15
U18
U19
U20
VOM1271
R25
R27
R31
R33
R36
R37
R39
R40
R42
R43
KEY0_0
KEY0_1
KEY1_0
KEY1_1
KEY2_0
KEY2_1
KEY3_0
KEY3_1
KEY4_0
KEY4_1
Q2
IPG20N06S2L65AATMA1
Q3
Q4
Q5
Q6
X2
15EDGRHCM-THR-3.5-24P
IN_COM
Q1
IRF7205
VCC24V
D4
BZV55C10
R11
100k

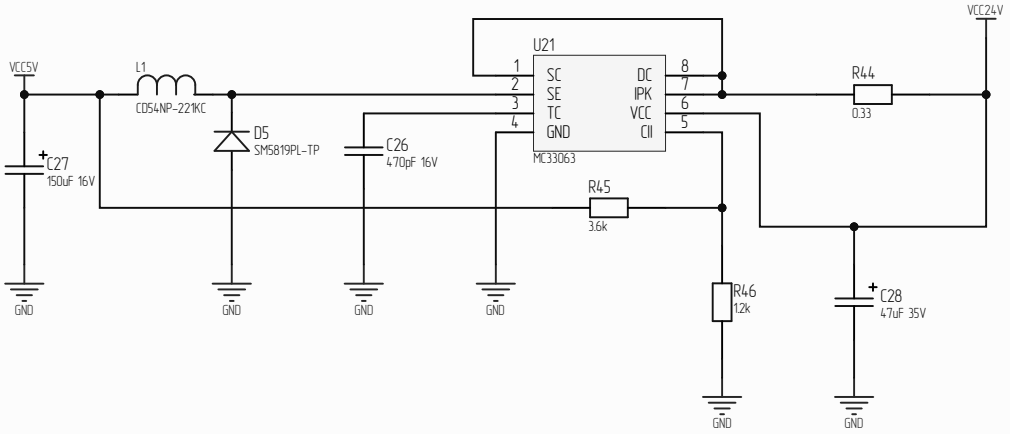
VCC24V
U21
VCC5V
L1
CD54NP-221KC
SC
SE
TC
GND
DC
IPK
VCC
CII
MC33063
R44
0.33
D5
SM5819PL-TP
C26
470pF 16V
C27
150uF 16V
R45
3.6k
R46
12k
C28
47uF 35V
GND

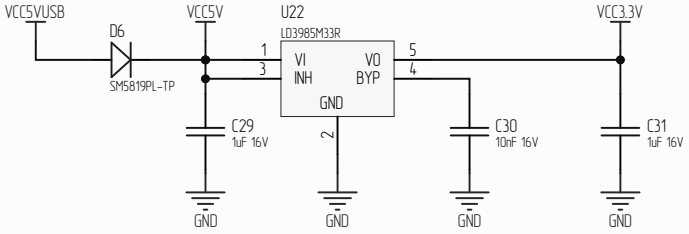
VCC5VUSB
VCC5V
U22
LD3985M33R
VCC3.3V
D6
SM5819PL-TP
VI
INH
VO
BYP
GND
C29
1uF 16V
C30
10nF 16V
C31
1uF 16V
GND

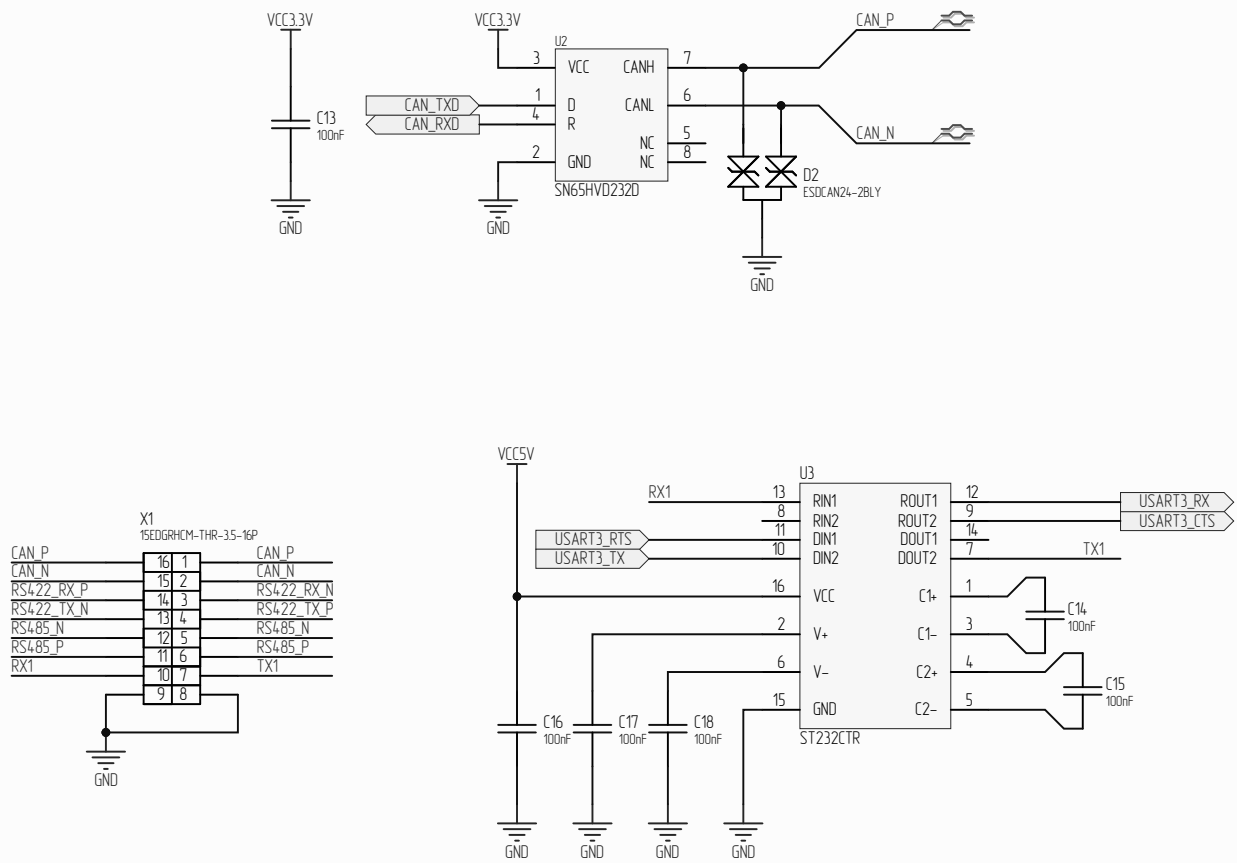
VCC3.3V
C13
100nF
GND
VCC3.3V
U2
VCC
CANH
D
CANL
R
NC
GND
NC
SN65HVD232D
CAN_TXD
CAN_RXD
CAN_P
CAN_N
D2
ESDCAN24-2BLY
X1
15EDGRHCM-THR-3.5-16P
CAN_P
CAN_N
RS422_RX_P
RS422_TX_N
RS485_N
RS485_P
RX1
TX1
VCC5V
U3
RX1
RIN1
RIN2
DIN1
DIN2
VCC
V+
V-
GND
ROUT1
ROUT2
DOUT1
DOUT2
C1+
C1-
C2+
C2-
ST232CTR
USART3_RTS
USART3_TX
USART3_RX
USART3_CTS
TX1
C14
100nF
C15
100nF
C16
100nF
C17
100nF
C18
100nF
VCC5V
C19
100nF
GND
VCC5V
U4
VCC
RO
DI
GND
A
B
Z
Y
MAX488CSA
UART4_RX
UART4_TX
RS422_TX_N
RS422_TX_P
RS422_RX_P
RS422_RX_N
R5
120
GND
VCC5V
R6
10k
U5
R
RE
DE
D
VCC
B
A
GND
SN75176BDR
UART5_RX
UART5_DE
UART5_TX
RS485_N
RS485_P
R7
10k
D3
SM712-02HTG
VCC5V
C20
100nF
GND

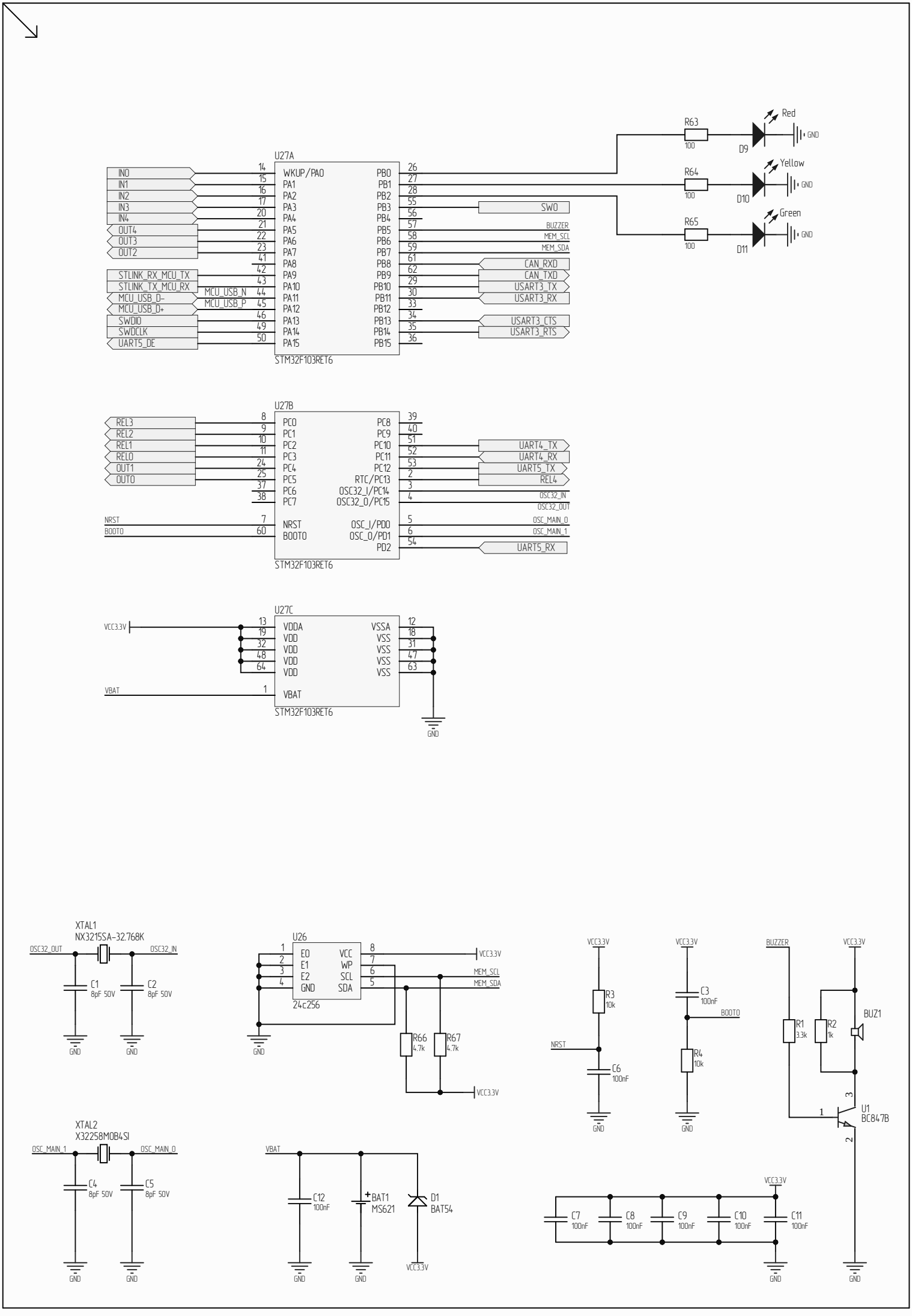
U27A
STM32F103RET6
WKUP/PA0
PA1
PA2
PA3
PA4
PA5
PA6
PA7
PA8
PA9
PA10
PA11
PA12
PA13
PA14
PA15
PB0
PB1
PB2
PB3
PB4
PB5
PB6
PB7
PB8
PB9
PB10
PB11
PB12
PB13
PB14
PB15
IN0
IN1
IN2
IN3
IN4
OUT4
OUT3
OUT2
STLINK_RX_MCU_TX
STLINK_TX_MCU_RX
MCU_USB_D-
MCU_USB_D+
SWDIO
SWDCLK
UART5_DE
MCU_USB_N
MCU_USB_P
SW0
BUZZER
MEM_SCL
MEM_SDA
CAN_RXD
CAN_TXD
USART3_TX
USART3_RX
USART3_CTS
USART3_RTS
R63
100
D9
Red
R64
100
D10
Yellow
R65
100
D11
Green
GND
U27B
STM32F103RET6
PC0
PC1
PC2
PC3
PC4
PC5
PC6
PC7
NRST
BOOT0
PC8
PC9
PC10
PC11
PC12
RTC/PC13
OSC32_I/PC14
OSC32_O/PC15
OSC_I/PD0
OSC_O/PD1
PD2
REL3
REL2
REL1
REL0
OUT1
OUT0
UART4_TX
UART4_RX
UART5_TX
REL4
OSC32_IN
OSC32_OUT
OSC_MAIN_0
OSC_MAIN_1
UART5_RX
U27C
STM32F103RET6
VDDA
VDD
VDD
VDD
VDD
VBAT
VSSA
VSS
VSS
VSS
VSS
VCC3.3V
VBAT
GND
XTAL1
NX3215SA-32.768K
OSC32_OUT
OSC32_IN
C1
8pF 50V
C2
8pF 50V
U26
24c256
E0
E1
E2
GND
VCC
WP
SCL
SDA
VCC3.3V
MEM_SCL
MEM_SDA
R66
4.7k
R67
4.7k
R3
10k
NRST
C6
100nF
C3
100nF
BOOT0
R4
10k
BUZZER
R1
3.3k
R2
1k
BUZ1
U1
BC847B
XTAL2
X32258MOB4SI
OSC_MAIN_1
OSC_MAIN_0
C4
8pF 50V
C5
8pF 50V
C12
100nF
BAT1
MS621
D1
BAT54
C7
100nF
C8
100nF
C9
100nF
C10
100nF
C11
100nF

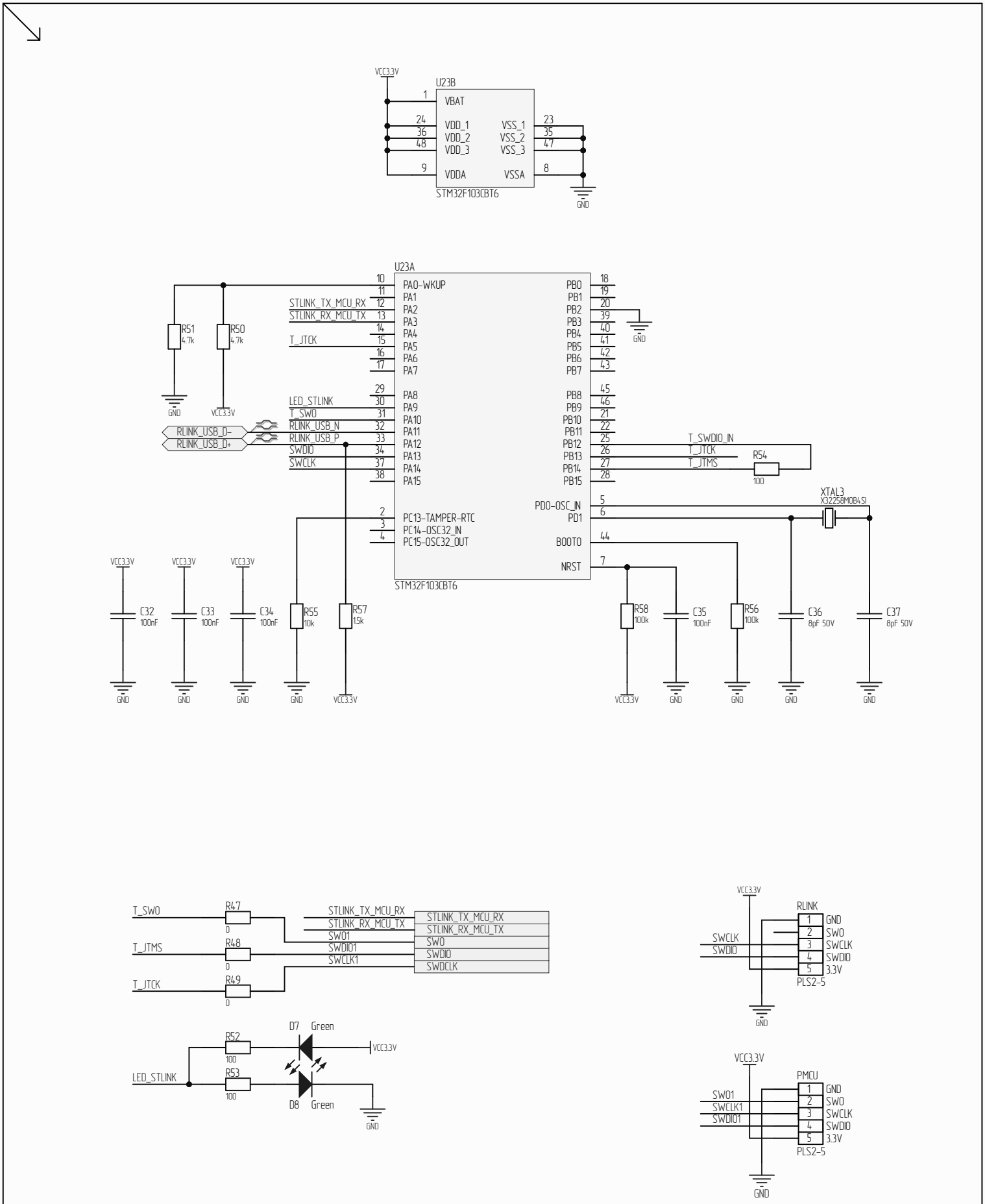
U23B
VCC3.3V
VBAT
VDD_1
VDD_2
VDD_3
VDDA
VSS_1
VSS_2
VSS_3
VSSA
STM32F103CBT6
GND
U23A
PA0-WKUP
PA1
PA2
PA3
PA4
PA5
PA6
PA7
PA8
PA9
PA10
PA11
PA12
PA13
PA14
PA15
PC13-TAMPER-RTC
PC14-OSC32_IN
PC15-OSC32_OUT
PB0
PB1
PB2
PB3
PB4
PB5
PB6
PB7
PB8
PB9
PB10
PB11
PB12
PB13
PB14
PB15
PD0-OSC_IN
PD1
BOOT0
NRST
STM32F103CBT6
STLINK_TX_MCU_RX
STLINK_RX_MCU_TX
T_JTCK
LED_STLINK
T_SWO
RLINK_USB_N
RLINK_USB_P
SWDIO
SWCLK
RLINK_USB_D-
RLINK_USB_D+
T_SWDIO_IN
T_JTCK
T_JTMS
R51 4.7k
R50 4.7k
R54 100
XTAL3 X32258M0B4SI
C32 100nF
C33 100nF
C34 100nF
R55 10k
R57 15k
R58 100k
C35 100nF
R56 100k
C36 8pF 50V
C37 8pF 50V
T_SWO
T_JTMS
T_JTCK
R47 0
R48 0
R49 0
STLINK_TX_MCU_RX
STLINK_RX_MCU_TX
SWO1
SWDIO1
SWCLK1
STLINK_TX_MCU_RX
STLINK_RX_MCU_TX
SWO
SWDIO
SWDCLK
RLINK
SWCLK
SWDIO
GND
SWO
SWCLK
SWDIO
3.3V
PLS2-5
R52 100
R53 100
D7 Green
D8 Green
LED_STLINK
PMCU
SWO1
SWCLK1
SWDIO1

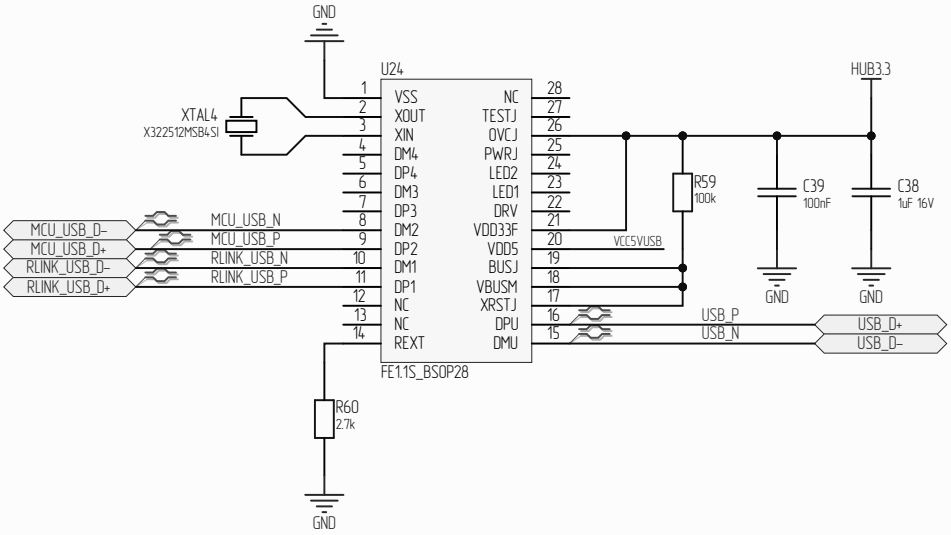
GND
U24
HUB3.3
XTAL4
X322512MSB4SI
VSS
XOUT
XIN
DM4
DP4
DM3
DP3
DM2
DP2
DM1
DP1
NC
NC
REXT
NC
TESTJ
OVCJ
PWRJ
LED2
LED1
DRV
VDD33F
VDD5
BUSJ
VBUSM
XRSTJ
DPU
DMU
FE1.1S_BSOP28
R59
100k
C39
100nF
C38
1uF 16V
VCC5VUSB
MCU_USB_D-
MCU_USB_D+
RLINK_USB_D-
RLINK_USB_D+
MCU_USB_N
MCU_USB_P
RLINK_USB_N
RLINK_USB_P
USB_P
USB_N
USB_D+
USB_D-
R60
2.7k
GND

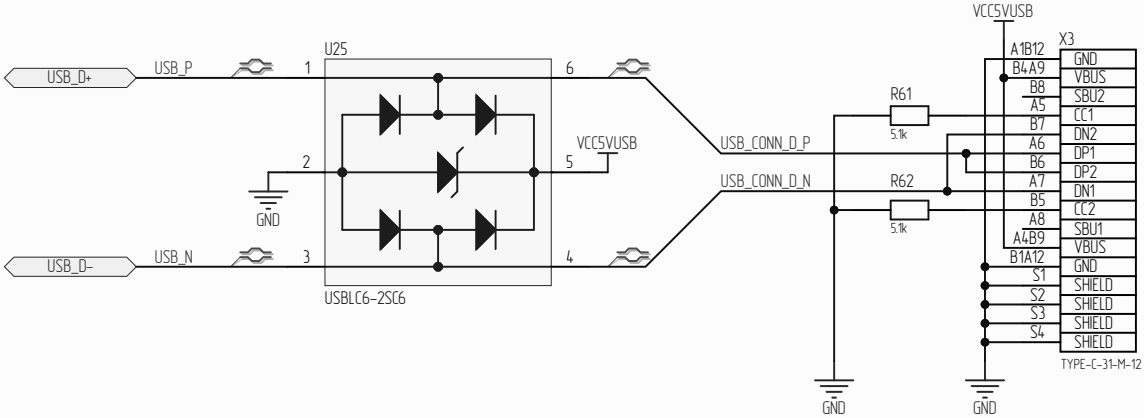
VCC5VUSB
U25
USB_D+
USB_P
USB_D-
USB_N
VCC5VUSB
GND
USBLC6-2SC6
USB_CONN_D_P
USB_CONN_D_N
R61
5.1k
R62
5.1k
X3
A1B12
B4A9
B8
A5
B7
A6
B6
A7
B5
A8
A4B9
B1A12
GND
VBUS
SBU2
CC1
DN2
DP1
DP2
DN1
CC2
SBU1
VBUS
GND
S1
S2
S3
S4
SHIELD
SHIELD
SHIELD
SHIELD
TYPE-C-31-M-12
GND
GND