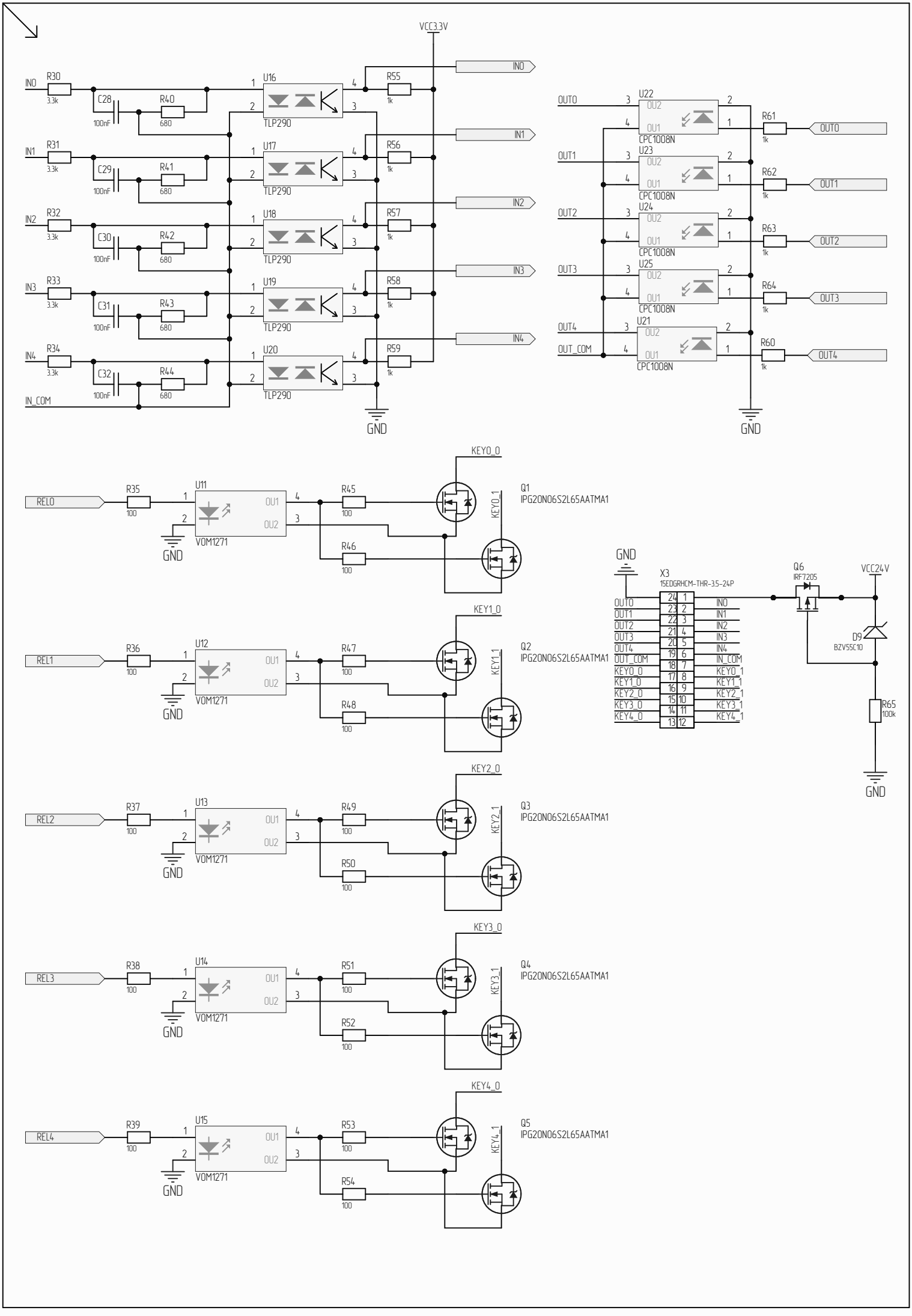
VCC3.3V
IN0
IN1
IN2
IN3
IN4
IN_COM
R30
R31
R32
R33
R34
3.3k
C28
C29
C30
C31
C32
100nF
R40
R41
R42
R43
R44
680
U16
U17
U18
U19
U20
TLP290
R55
R56
R57
R58
R59
1k
GND
OUT0
OUT1
OUT2
OUT3
OUT4
OUT_COM
U22
U23
U24
U25
U21
OU2
OU1
CPC1008N
R61
R62
R63
R64
R60
REL0
REL1
REL2
REL3
REL4
R35
R36
R37
R38
R39
100
U11
U12
U13
U14
U15
VOM1271
R45
R46
R47
R48
R49
R50
R51
R52
R53
R54
KEY0_0
KEY1_0
KEY2_0
KEY3_0
KEY4_0
KEY0_1
KEY1_1
KEY2_1
KEY3_1
KEY4_1
Q1
IPG20N06S2L65AATMA1
Q2
Q3
Q4
Q5
X3
15EDGRHCM-THR-3.5-24P
Q6
IRF7205
VCC24V
D9
BZV55C10
R65
100k

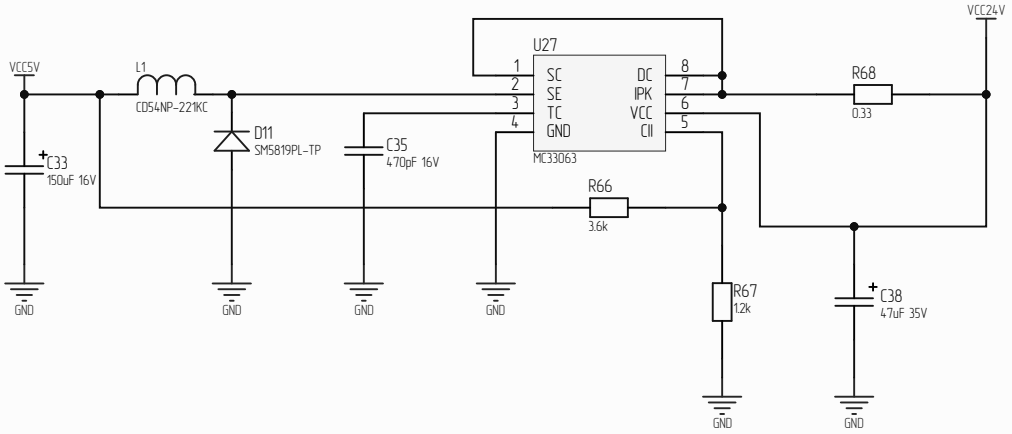
VCC24V
U27
VCC5V
L1
CD54NP-221KC
SC
SE
TC
GND
DC
IPK
VCC
CII
MC33063
R68
0.33
D11
SM5819PL-TP
C35
470pF 16V
C33
150uF 16V
R66
3.6k
R67
1.2k
C38
47uF 35V
GND

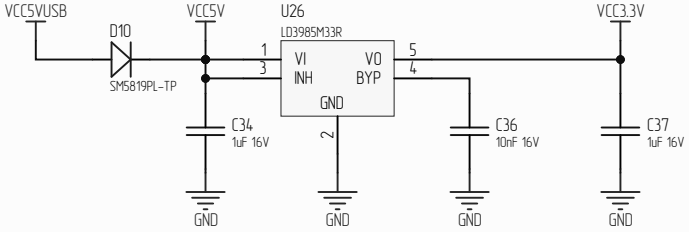
VCC5VUSB
VCC5V
U26
LD3985M33R
VCC3.3V
D10
SM5819PL-TP
VI
INH
VO
BYP
GND
C34
1uF 16V
C36
10nF 16V
C37
1uF 16V
GND

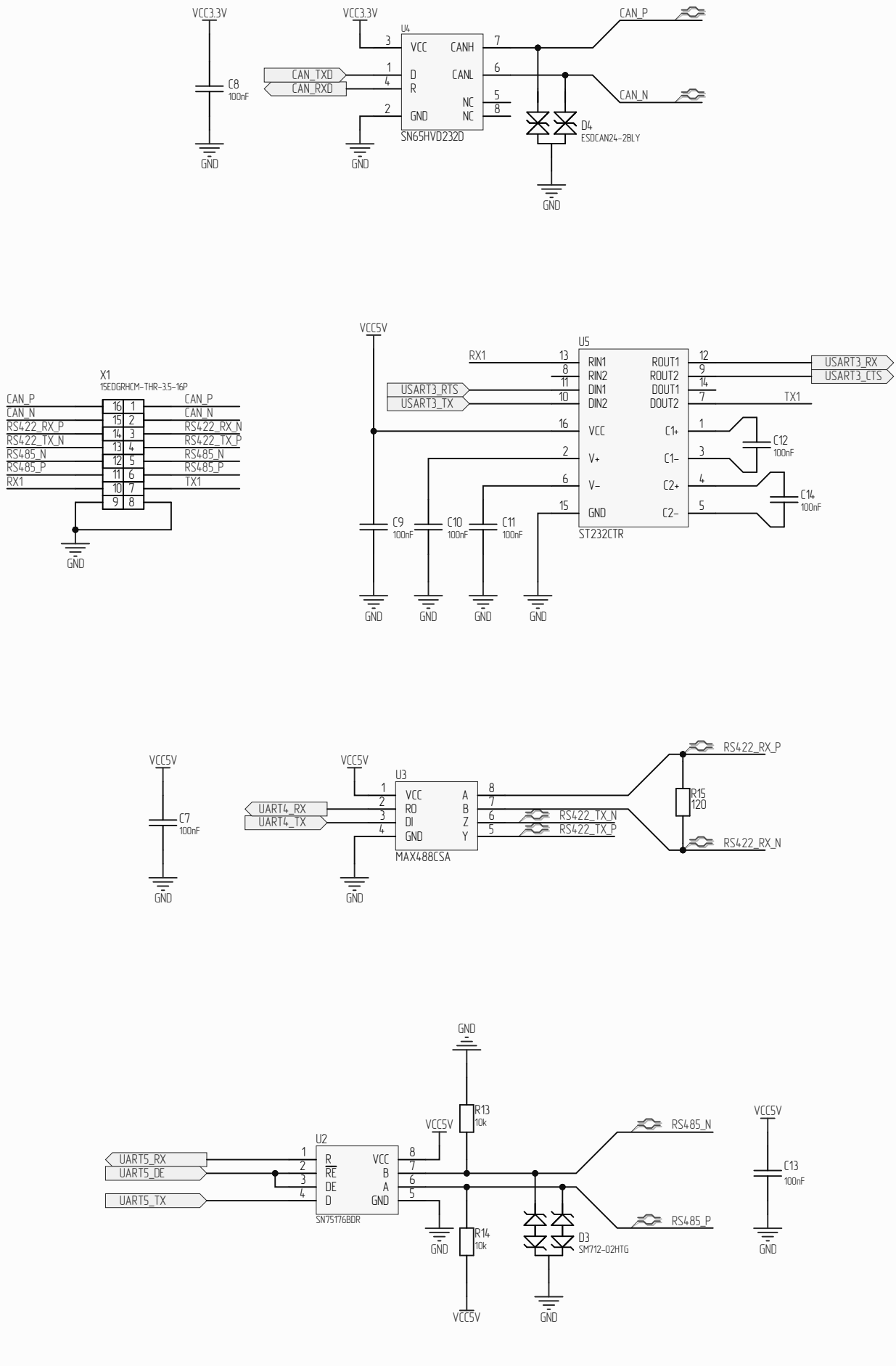
VCC3.3V
C8
100nF
GND
VCC3.3V
U4
VCC
CANH
D
CANL
R
NC
GND
NC
CAN_TXD
CAN_RXD
SN65HVD232D
CAN_P
CAN_N
D4
ESDCAN24-2BLY
X1
15EDGRHCM-THR-3.5-16P
CAN_P
CAN_N
RS422_RX_P
RS422_TX_N
RS485_N
RS485_P
RX1
RS422_RX_N
RS422_TX_P
TX1
VCC5V
U5
RX1
RIN1
RIN2
DIN1
DIN2
VCC
V+
V-
GND
ROUT1
ROUT2
DOUT1
DOUT2
C1+
C1-
C2+
C2-
USART3_RTS
USART3_TX
USART3_RX
USART3_CTS
TX1
C12
100nF
C14
100nF
C9
100nF
C10
100nF
C11
100nF
ST232CTR
VCC5V
C7
100nF
GND
VCC5V
U3
VCC
RO
DI
GND
A
B
Z
Y
UART4_RX
UART4_TX
MAX488CSA
RS422_TX_N
RS422_TX_P
RS422_RX_P
R15
120
RS422_RX_N
GND
R13
10k
VCC5V
U2
R
RE
DE
D
VCC
B
A
GND
UART5_RX
UART5_DE
UART5_TX
SN75176BDR
R14
10k
RS485_N
RS485_P
D3
SM712-02HTG
VCC5V
C13
100nF
GND

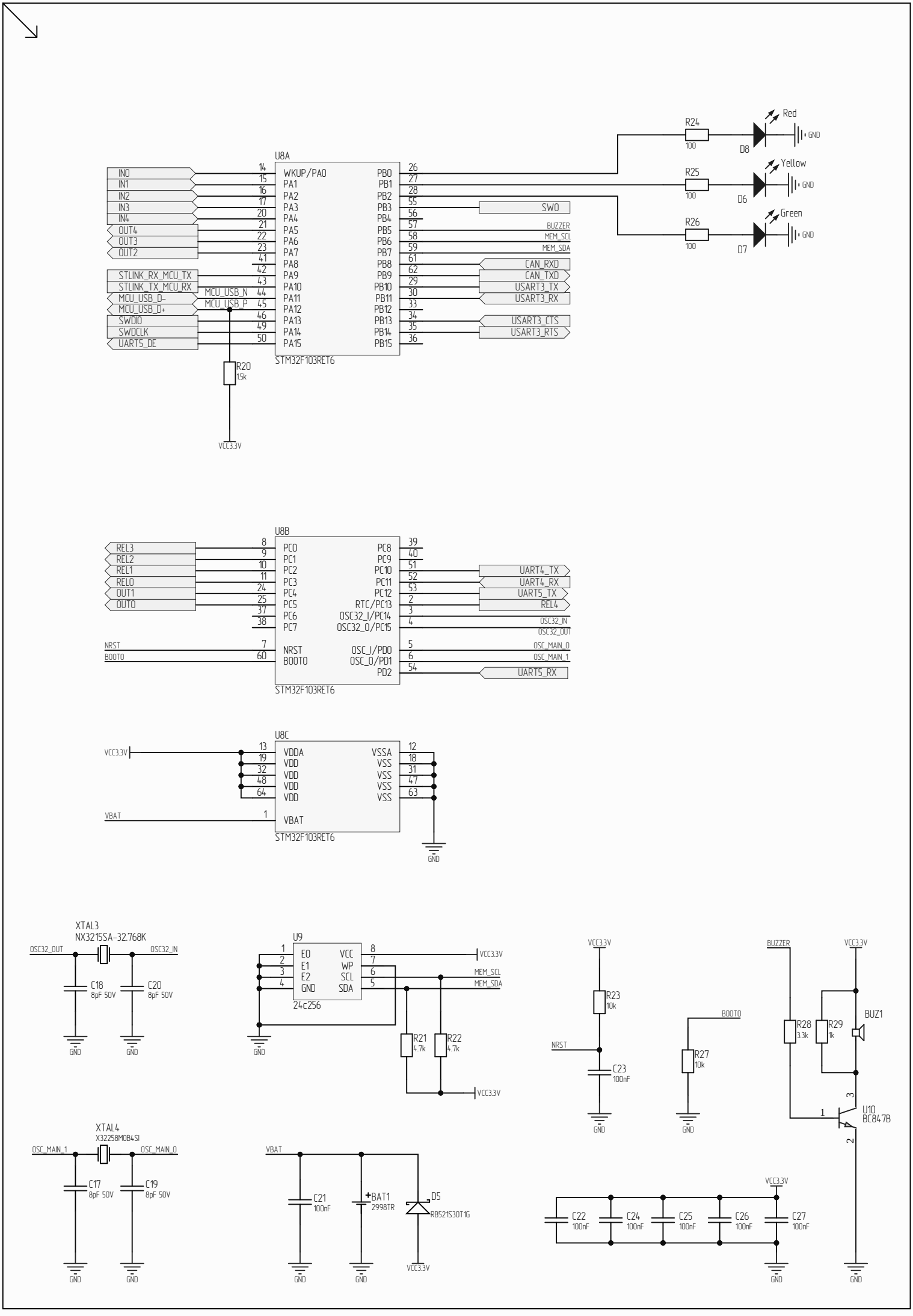
U8A
STM32F103RET6
WKUP/PA0
PA1
PA2
PA3
PA4
PA5
PA6
PA7
PA8
PA9
PA10
PA11
PA12
PA13
PA14
PA15
PB0
PB1
PB2
PB3
PB4
PB5
PB6
PB7
PB8
PB9
PB10
PB11
PB12
PB13
PB14
PB15
IN0
IN1
IN2
IN3
IN4
OUT4
OUT3
OUT2
STLINK_RX_MCU_TX
STLINK_TX_MCU_RX
MCU_USB_D-
MCU_USB_D+
SWDIO
SWDCLK
UART5_DE
MCU_USB_N
MCU_USB_P
R20
15k
VCC3.3V
SW0
BUZZER
MEM_SCL
MEM_SDA
CAN_RXD
CAN_TXD
USART3_TX
USART3_RX
USART3_CTS
USART3_RTS
R24
100
D8
Red
R25
100
D6
Yellow
R26
100
D7
Green
GND
U8B
STM32F103RET6
REL3
REL2
REL1
REL0
OUT1
OUT0
NRST
BOOT0
PC0
PC1
PC2
PC3
PC4
PC5
PC6
PC7
NRST
BOOT0
PC8
PC9
PC10
PC11
PC12
RTC/PC13
OSC32_I/PC14
OSC32_O/PC15
OSC_I/PD0
OSC_O/PD1
PD2
UART4_TX
UART4_RX
UART5_TX
REL4
OSC32_IN
OSC32_OUT
OSC_MAIN_0
OSC_MAIN_1
UART5_RX
U8C
STM32F103RET6
VCC3.3V
VBAT
VDDA
VDD
VDD
VDD
VDD
VBAT
VSSA
VSS
VSS
VSS
VSS
GND
XTAL3
NX3215SA-32.768K
OSC32_OUT
OSC32_IN
C18
8pF 50V
C20
8pF 50V
U9
24c256
E0
E1
E2
GND
VCC
WP
SCL
SDA
VCC3.3V
MEM_SCL
MEM_SDA
R21
4.7k
R22
4.7k
R23
10k
NRST
C23
100nF
BOOT0
R27
10k
BUZZER
R28
3.3k
R29
1k
BUZ1
U10
BC847B
XTAL4
X32258MOB4SI
OSC_MAIN_1
OSC_MAIN_0
C17
8pF 50V
C19
8pF 50V
C21
100nF
BAT1
2998TR
D5
RB521S30T1G
C22
100nF
C24
100nF
C25
100nF
C26
100nF
C27
100nF

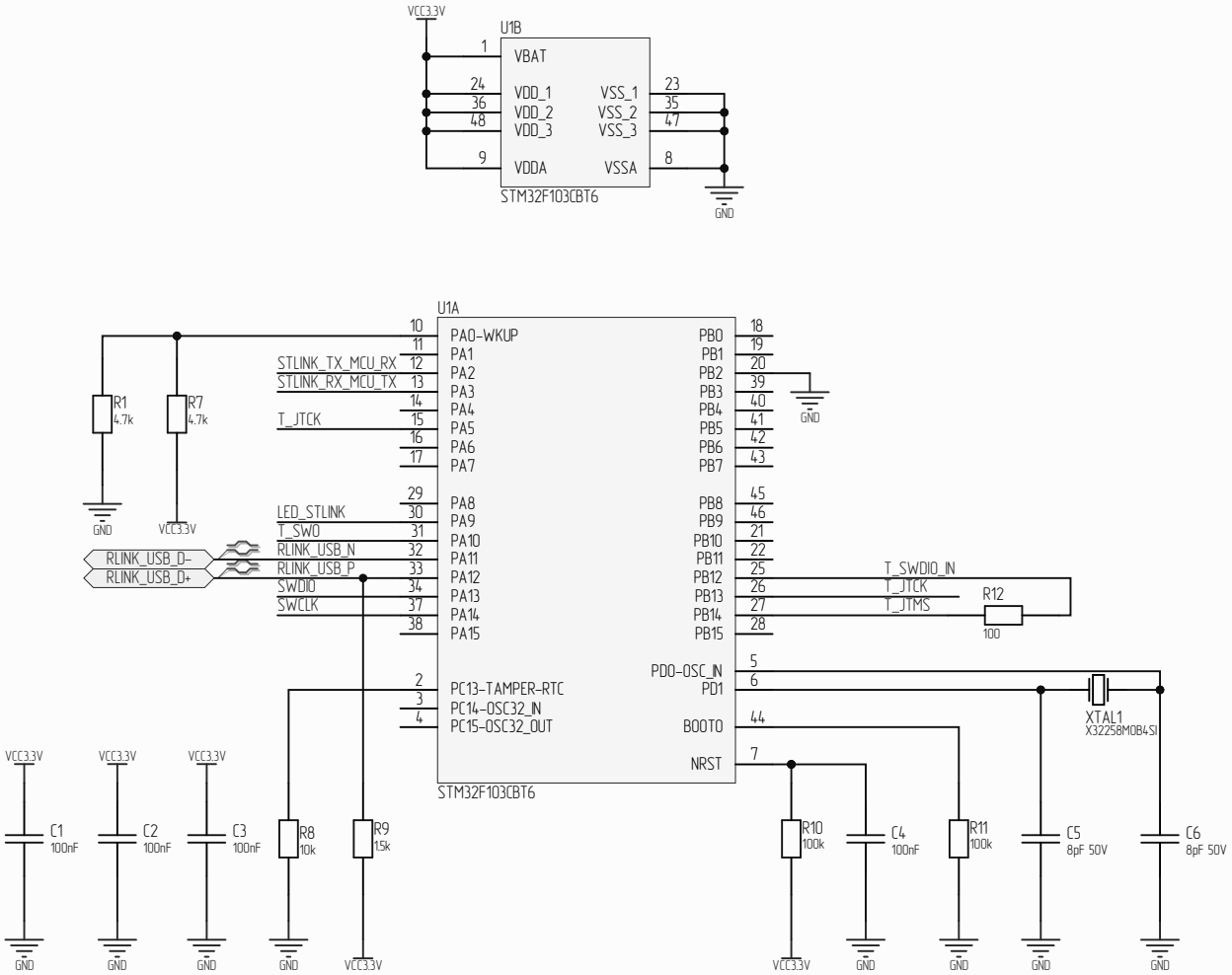
U1B
VCC3.3V
VBAT
VDD_1
VDD_2
VDD_3
VDDA
VSS_1
VSS_2
VSS_3
VSSA
STM32F103CBT6
GND
U1A
PA0-WKUP
PA1
PA2
PA3
PA4
PA5
PA6
PA7
PA8
PA9
PA10
PA11
PA12
PA13
PA14
PA15
PC13-TAMPER-RTC
PC14-OSC32_IN
PC15-OSC32_OUT
PB0
PB1
PB2
PB3
PB4
PB5
PB6
PB7
PB8
PB9
PB10
PB11
PB12
PB13
PB14
PB15
PD0-OSC_IN
PD1
BOOT0
NRST
STM32F103CBT6
STLINK_TX_MCU_RX
STLINK_RX_MCU_TX
T_JTCK
LED_STLINK
T_SWO
RLINK_USB_N
RLINK_USB_P
SWDIO
SWCLK
RLINK_USB_D-
RLINK_USB_D+
T_SWDIO_IN
T_JTCK
T_JTMS
R12
100
R1
4.7k
R7
4.7k
XTAL1
X32258M08B4SI
C1
100nF
C2
100nF
C3
100nF
R8
10k
R9
15k
R10
100k
C4
100nF
R11
100k
C5
8pF 50V
C6
8pF 50V

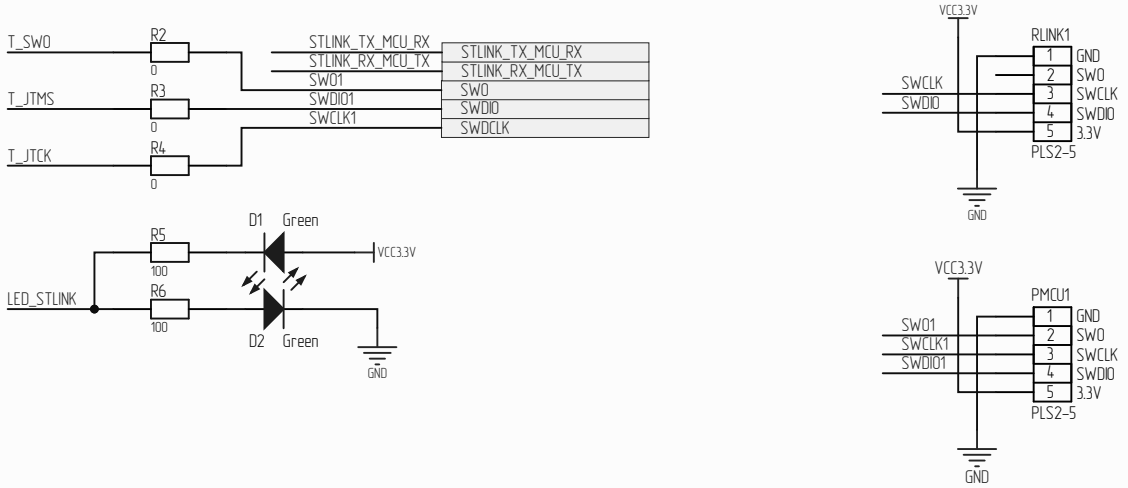
T_SWO
T_JTMS
T_JTCK
R2
R3
R4
0
STLINK_TX_MCU_RX
STLINK_RX_MCU_TX
SWO1
SWDIO1
SWCLK1
STLINK_TX_MCU_RX
STLINK_RX_MCU_TX
SWO
SWDIO
SWDCLK
D1 Green
D2 Green
R5
R6
100
LED_STLINK
VCC3.3V
GND
RLINK1
SWCLK
SWDIO
GND
SWO
SWCLK
SWDIO
3.3V
PLS2-5
PMCU1
SWO1
SWCLK1
SWDIO1
SWO
SWCLK
SWDIO
3.3V
PLS2-5

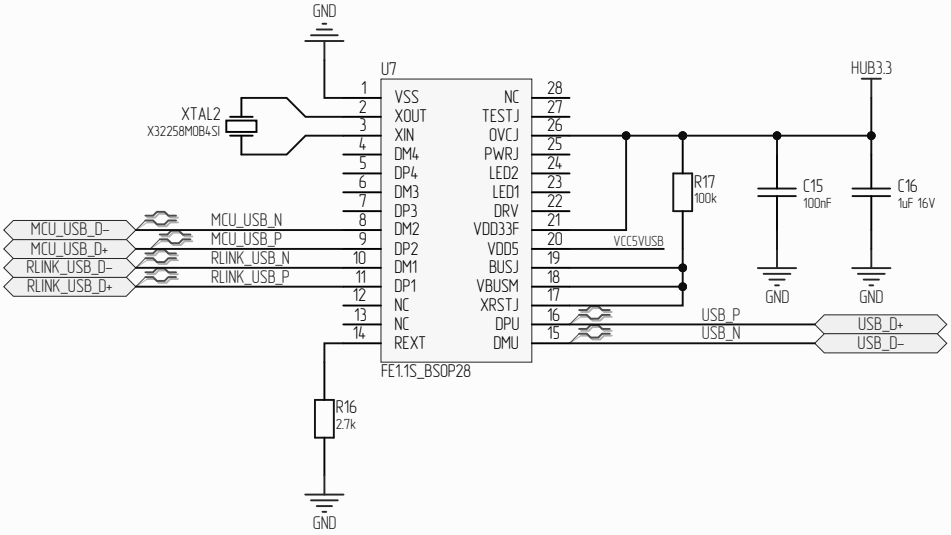
GND
U7
HUB3.3
XTAL2
X32258MOB4SI
VSS
XOUT
XIN
DM4
DP4
DM3
DP3
DM2
DP2
DM1
DP1
NC
NC
REXT
NC
TESTJ
OVCJ
PWRJ
LED2
LED1
DRV
VDD33F
VDD5
BUSJ
VBUSM
XRSTJ
DPU
DMU
FE1.1S_BSOP28
MCU_USB_D-
MCU_USB_D+
RLINK_USB_D-
RLINK_USB_D+
MCU_USB_N
MCU_USB_P
RLINK_USB_N
RLINK_USB_P
VCC5VUSB
R17
100k
C15
100nF
C16
1uF 16V
USB_P
USB_N
USB_D+
USB_D-
R16
2.7k

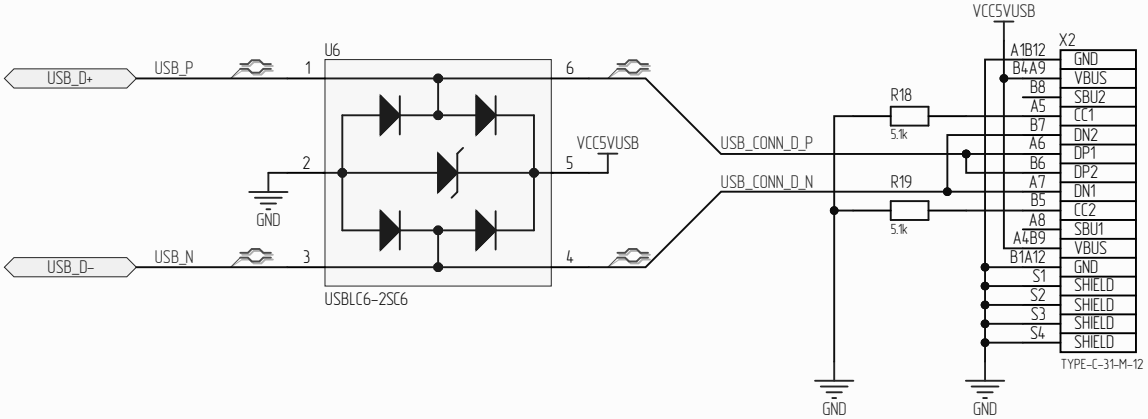
VCC5VUSB
U6
USB_D+
USB_P
USB_D-
USB_N
GND
VCC5VUSB
USBLC6-2SC6
USB_CONN_D_P
USB_CONN_D_N
R18
5.1k
R19
5.1k
X2
A1B12
B4A9
B8
A5
B7
A6
B6
A7
B5
A8
A4B9
B1A12
GND
VBUS
SBU2
CC1
DN2
DP1
DP2
DN1
CC2
SBU1
VBUS
GND
S1
S2
S3
S4
SHIELD
SHIELD
SHIELD
SHIELD
TYPE-C-31-M-12