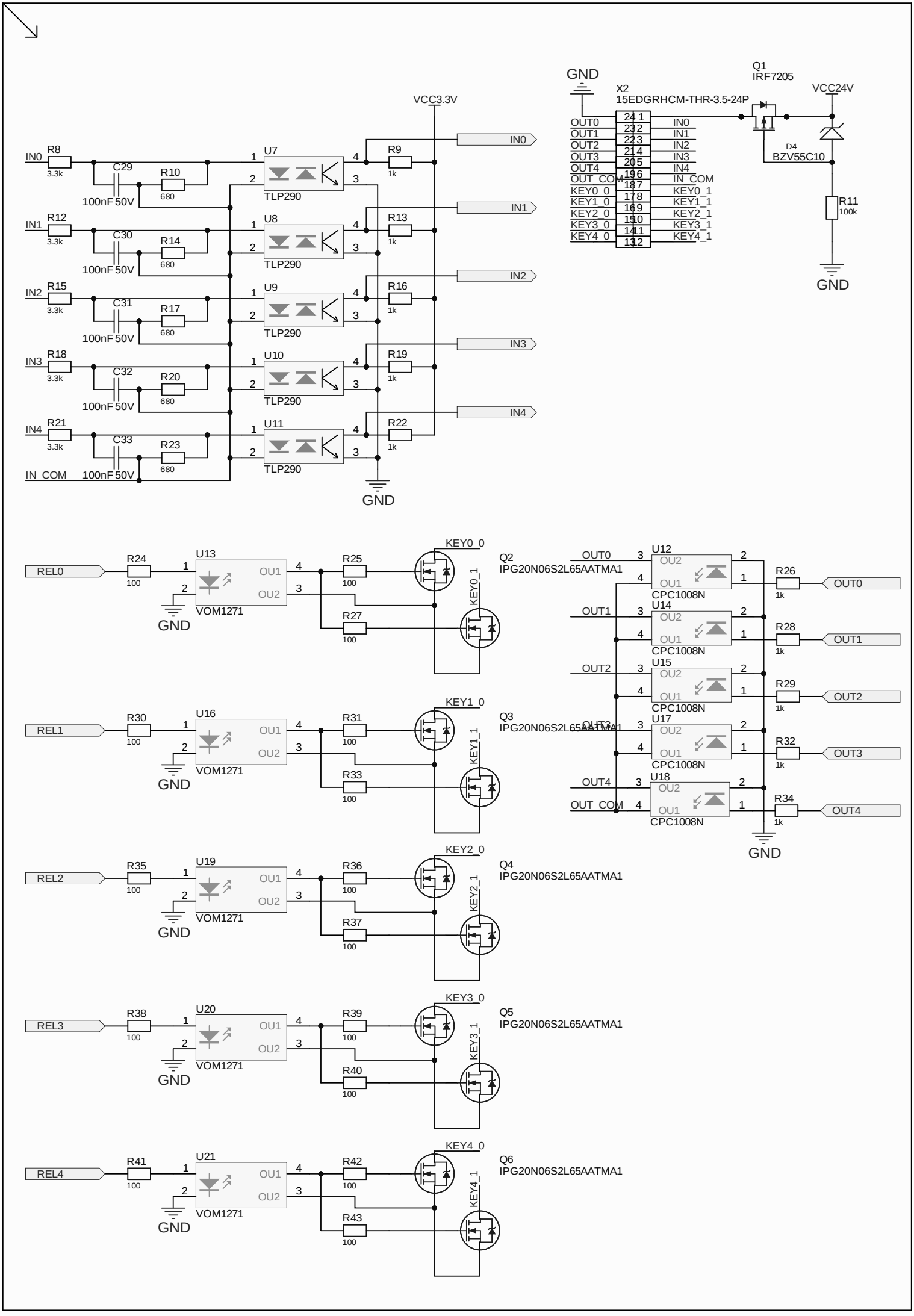
VCC3.3V
IN0
IN1
IN2
IN3
IN4
IN_COM
R8
R12
R15
R18
R21
3.3k
C29
C30
C31
C32
C33
100nF 50V
R10
R14
R17
R20
R23
680
U7
U8
U9
U10
U11
TLP290
R9
R13
R16
R19
R22
1k
GND
X2
15EDGRHCM-THR-3.5-24P
OUT0
OUT1
OUT2
OUT3
OUT4
OUT_COM
KEY0_0
KEY1_0
KEY2_0
KEY3_0
KEY4_0
KEY0_1
KEY1_1
KEY2_1
KEY3_1
KEY4_1
Q1
IRF7205
VCC24V
D4
BZV55C10
R11
100k
REL0
REL1
REL2
REL3
REL4
R24
R30
R35
R38
R41
100
U13
U16
U19
U20
U21
VOM1271
OU1
OU2
R25
R27
R31
R33
R36
R37
R39
R40
R42
R43
KEY0_0
KEY1_0
KEY2_0
KEY3_0
KEY4_0
Q2
Q3
Q4
Q5
Q6
IPG20N06S2L65AATMA1
U12
U14
U15
U17
U18
CPC1008N
R26
R28
R29
R32
R34

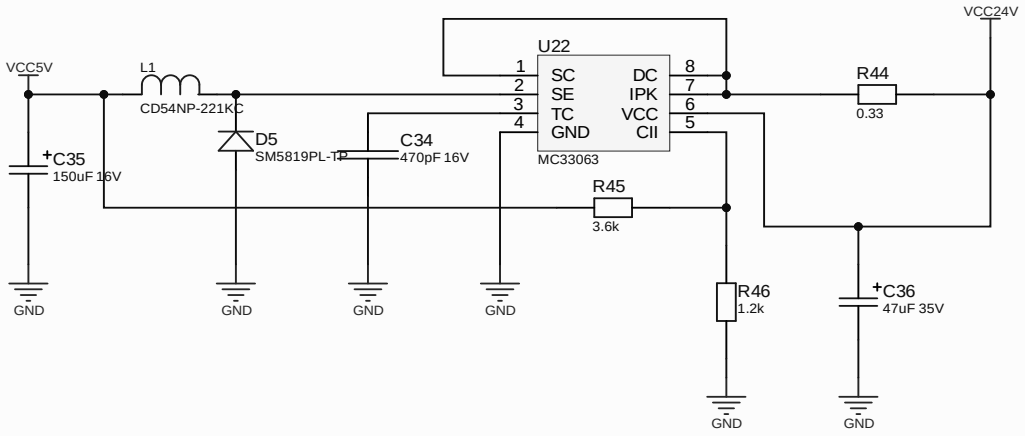
VCC24V
U22
VCC5V
L1
CD54NP-221KC
1
2
3
4
SC
SE
TC
GND
DC
IPK
VCC
CII
8
7
6
5
R44
0.33
D5
SM5819PL-TP
C34
470pF 16V
MC33063
+C35
150uF 16V
R45
3.6k
GND
GND
GND
GND
R46
1.2k
+C36
47uF 35V
GND
GND

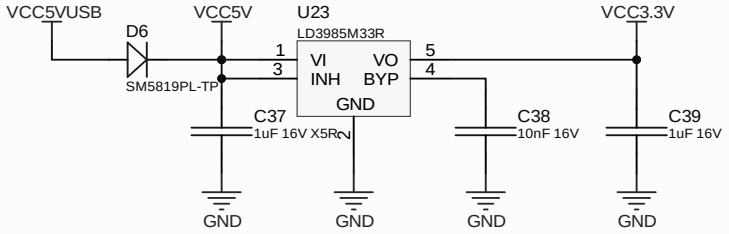
VCC5VUSB
D6
VCC5V
U23
LD3985M33R
VCC3.3V
1
3
VI
INH
VO
BYP
GND
5
4
SM5819PL-TP
C37
1uF 16V X5R
C38
10nF 16V
C39
1uF 16V
GND
GND
GND
GND

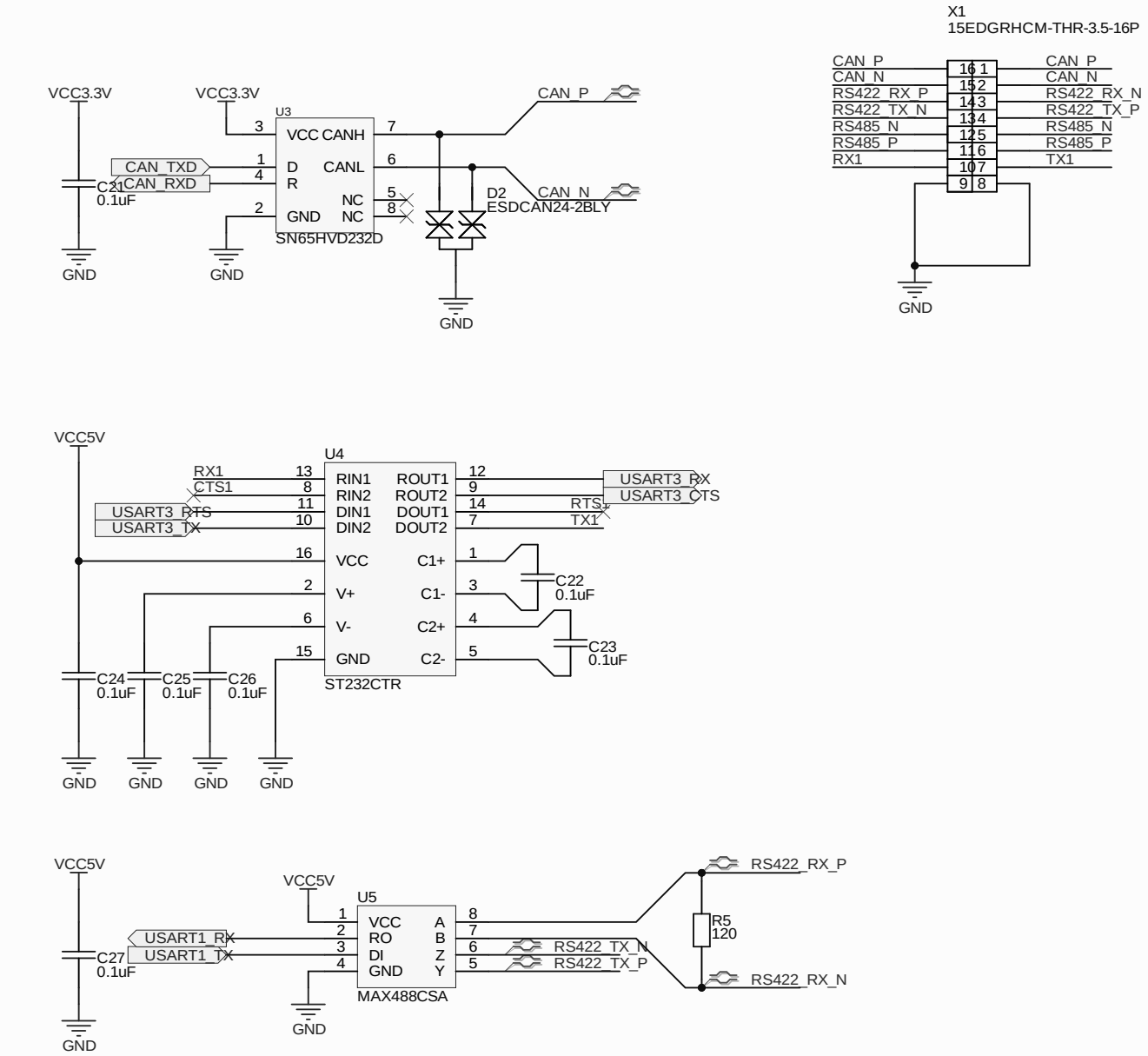
VCC3.3V
VCC3.3V
U3
VCC CANH
D CANL
R
NC
GND NC
SN65HVD232D
CAN_TXD
CAN_RXD
C21
0.1uF
GND
GND
CAN_P
CAN_N
D2
ESDCAN24-2BLY
GND
X1
15EDGRHCM-THR-3.5-16P
CAN_P
CAN_N
RS422_RX_P
RS422_TX_N
RS485_N
RS485_P
RX1
CAN_P
CAN_N
RS422_RX_N
RS422_TX_P
RS485_N
RS485_P
TX1
GND
VCC5V
U4
RX1
CTS1
USART3_RTS
USART3_TX
RIN1 ROUT1
RIN2 ROUT2
DIN1 DOUT1
DIN2 DOUT2
VCC C1+
V+ C1-
V- C2+
GND C2-
ST232CTR
USART3_RX
USART3_CTS
RTS1
TX1
C22
0.1uF
C23
0.1uF
C24
0.1uF
C25
0.1uF
C26
0.1uF
GND
GND
GND
GND
VCC5V
C27
0.1uF
GND
VCC5V
U5
USART1_RX
USART1_TX
VCC A
RO B
DI Z
GND Y
MAX488CSA
GND
RS422_TX_N
RS422_TX_P
RS422_RX_P
R5
120
RS422_RX_N
GND
R6
10k
VCC5V
U6
USART6_RX
USART6_DE
USART6_TX
R RE
DE
D
VCC
B
A
GND
SN75176BDR
GND
R7
10k
VCC5V
RS485_N
VCC5V
C28
0.1uF
RS485_P
GND
D3
SM712-02HTG
GND

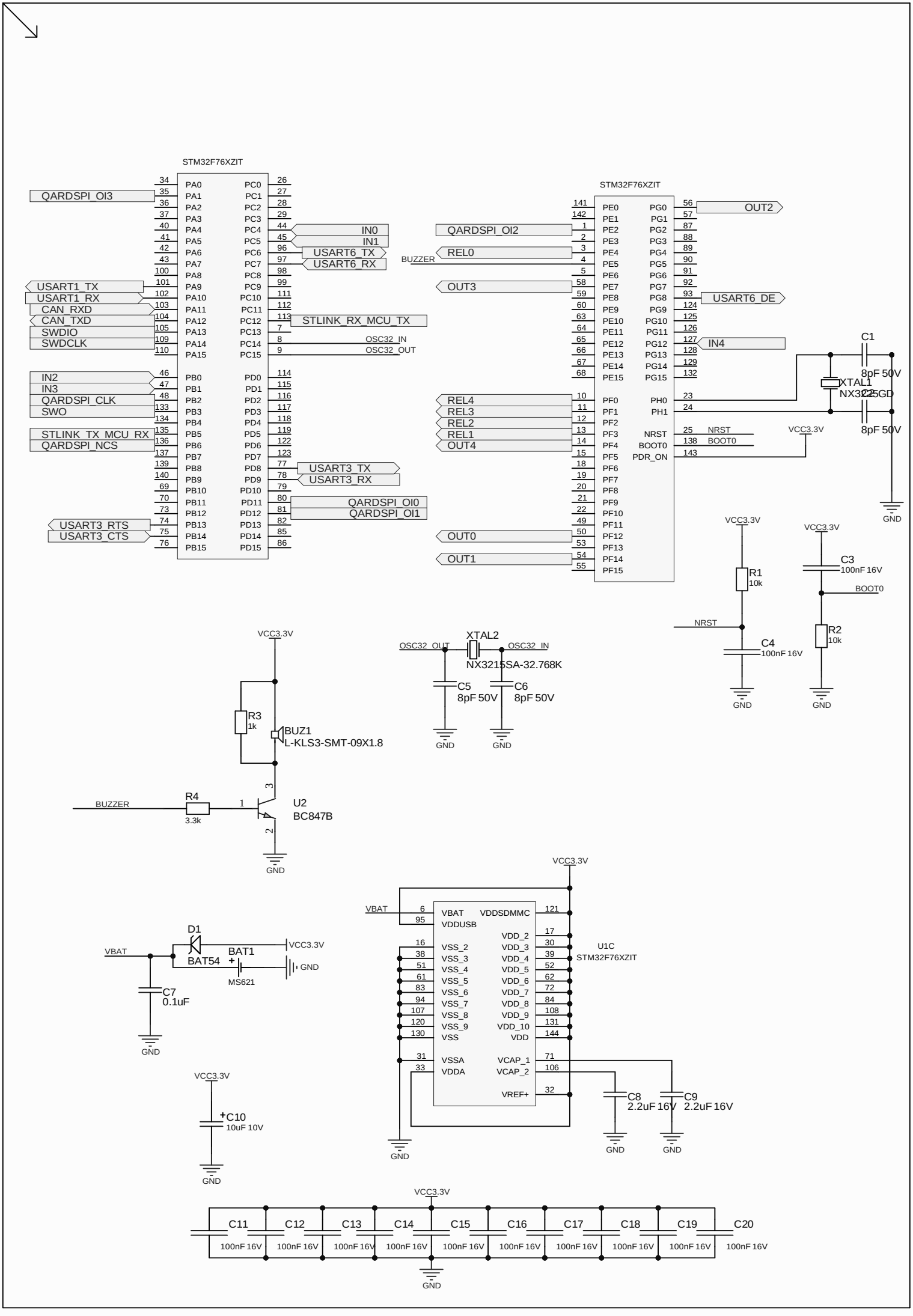
STM32F76XZIT
QARDSPI_OI3
IN0
IN1
USART6_TX
USART6_RX
USART1_TX
USART1_RX
CAN_RXD
CAN_TXD
SWDIO
SWDCLK
STLINK_RX_MCU_TX
OSC32_IN
OSC32_OUT
IN2
IN3
QARDSPI_CLK
SWO
STLINK_TX_MCU_RX
QARDSPI_NCS
USART3_TX
USART3_RX
QARDSPI_OI0
QARDSPI_OI1
USART3_RTS
USART3_CTS
STM32F76XZIT
QARDSPI_OI2
REL0
BUZZER
OUT3
OUT2
USART6_DE
IN4
REL4
REL3
REL2
REL1
OUT4
OUT0
OUT1
NRST
BOOT0
PDR_ON
C1
8pF 50V
XTAL1
NX3225GD
8pF 50V
VCC3.3V
GND
R1
10k
C3
100nF 16V
BOOT0
R2
10k
C4
100nF 16V
XTAL2
NX3215SA-32.768K
C5
8pF 50V
C6
8pF 50V
R3
1k
BUZ1
L-KLS3-SMT-09X1.8
R4
3.3k
U2
BC847B
D1
BAT54
BAT1
MS621
VBAT
C7
0.1uF
U1C
STM32F76XZIT
VDDSDMMC
VDDUSB
VDD_2
VDD_3
VDD_4
VDD_5
VDD_6
VDD_7
VDD_8
VDD_9
VDD_10
VDD
VSS_2
VSS_3
VSS_4
VSS_5
VSS_6
VSS_7
VSS_8
VSS_9
VSS
VSSA
VDDA
VCAP_1
VCAP_2
VREF+
C8
2.2uF 16V
C9
2.2uF 16V
C10
10uF 10V
C11
C12
C13
C14
C15
C16
C17
C18
C19
C20
100nF 16V

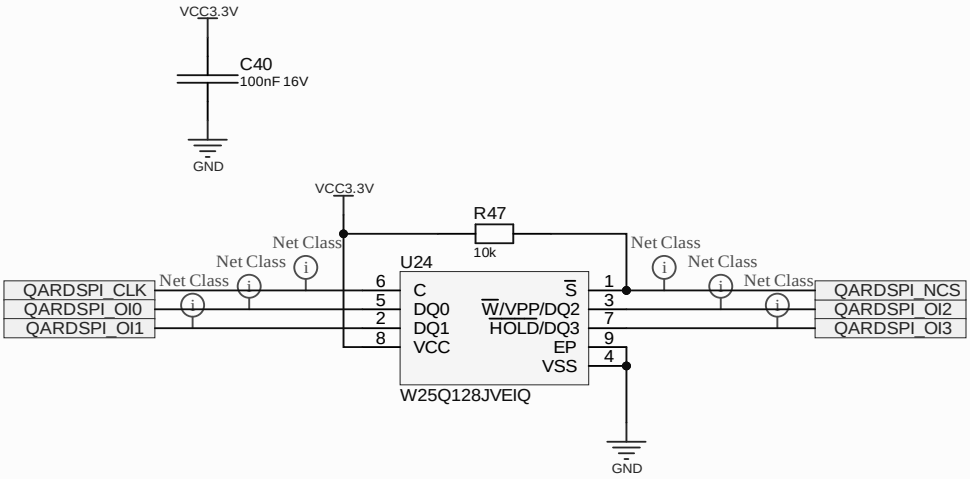
VCC3.3V
C40
100nF 16V
GND
VCC3.3V
R47
10k
Net Class
Net Class
Net Class
Net Class
Net Class
Net Class
U24
QARDSPI_CLK
QARDSPI_OI0
QARDSPI_OI1
6
5
2
8
C
DQ0
DQ1
VCC
S
W/VPP/DQ2
HOLD/DQ3
EP
VSS
1
3
7
9
4
QARDSPI_NCS
QARDSPI_OI2
QARDSPI_OI3
W25Q128JVEIQ
GND

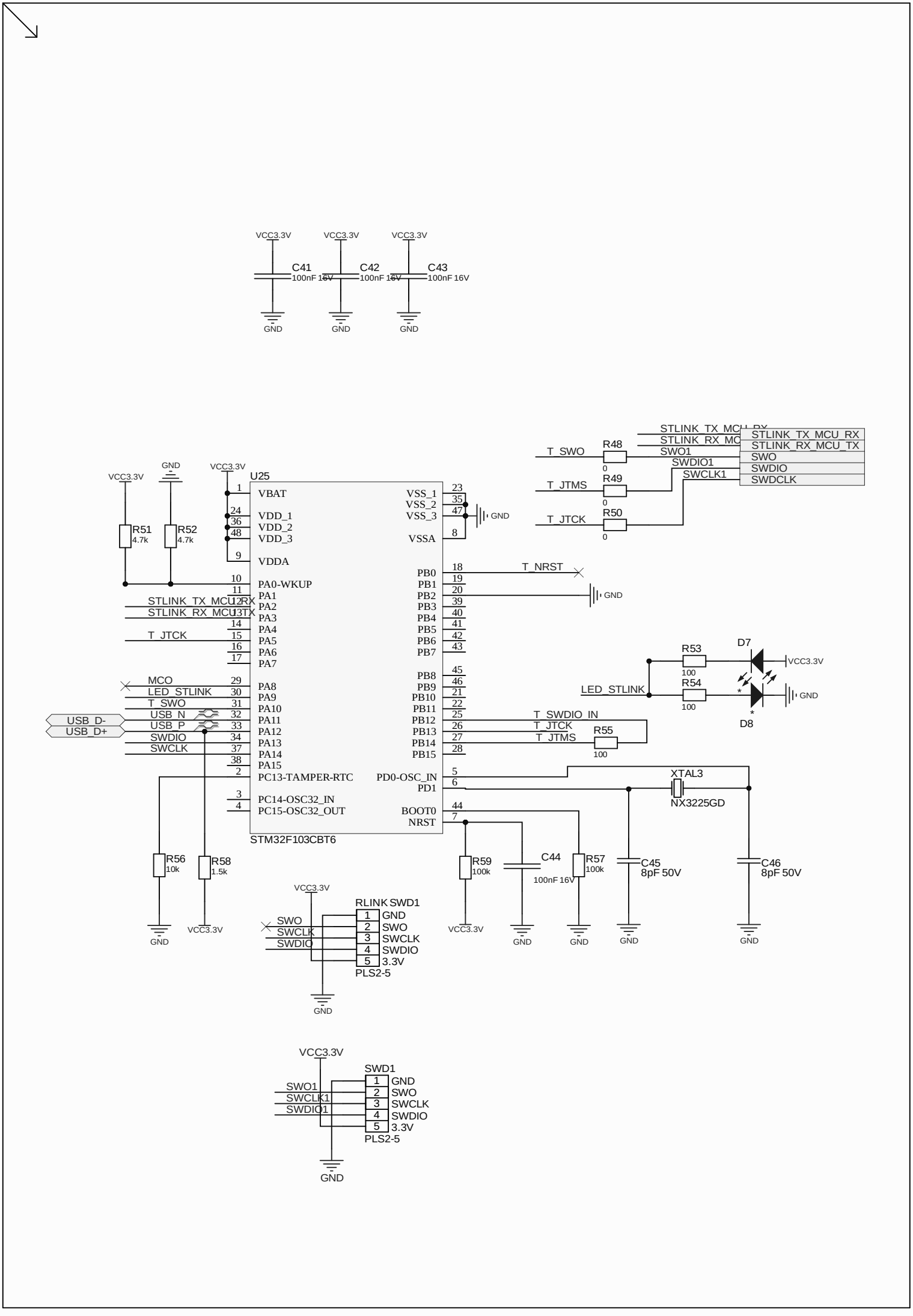
VCC3.3V
C41
100nF 16V
C42
100nF 16V
C43
100nF 16V
GND
U25
VBAT
VDD_1
VDD_2
VDD_3
VDDA
PA0-WKUP
PA1
PA2
PA3
PA4
PA5
PA6
PA7
PA8
PA9
PA10
PA11
PA12
PA13
PA14
PA15
PC13-TAMPER-RTC
PC14-OSC32_IN
PC15-OSC32_OUT
VSS_1
VSS_2
VSS_3
VSSA
PB0
PB1
PB2
PB3
PB4
PB5
PB6
PB7
PB8
PB9
PB10
PB11
PB12
PB13
PB14
PB15
PD0-OSC_IN
PD1
BOOT0
NRST
STM32F103CBT6
R51
4.7k
R52
4.7k
STLINK_TX_MCU_RX
STLINK_RX_MCU_TX
T_JTCK
MCO
LED_STLINK
T_SWO
USB_N
USB_P
SWDIO
SWCLK
USB_D-
USB_D+
T_NRST
T_SWO
T_JTMS
T_JTCK
R48
R49
R50
SWO1
SWDIO1
SWCLK1
STLINK_TX_MCU_RX
STLINK_RX_MCU_TX
SWO
SWDIO
SWDCLK
R53
R54
D7
D8
LED_STLINK
T_SWDIO_IN
T_JTCK
T_JTMS
R55
XTAL3
NX3225GD
R56
10k
R58
1.5k
R59
100k
C44
100nF 16V
R57
100k
C45
8pF 50V
C46
8pF 50V
RLINK SWD1
SWO
SWCLK
SWDIO
GND
SWO
SWCLK
SWDIO
3.3V
PLS2-5
SWD1
SWO1
SWCLK1
SWDIO1
GND
SWO
SWCLK
SWDIO
3.3V
PLS2-5

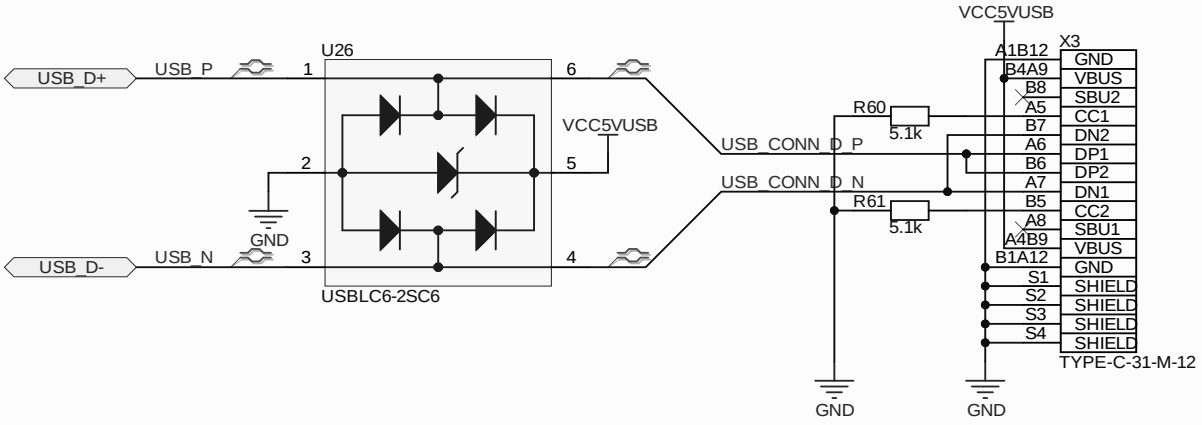
USB_D+
USB_P
1
U26
6
VCC5VUSB
2
5
GND
USB_D-
USB_N
3
4
USBLC6-2SC6
USB_CONN_D_P
USB_CONN_D_N
R60
5.1k
R61
5.1k
GND
VCC5VUSB
X3
A1B12
B4A9
B8
A5
B7
A6
B6
A7
B5
A8
A4B9
B1A12
S1
S2
S3
S4
GND
VBUS
SBU2
CC1
DN2
DP1
DP2
DN1
CC2
SBU1
VBUS
GND
SHIELD
SHIELD
SHIELD
SHIELD
TYPE-C-31-M-12
GND
GND