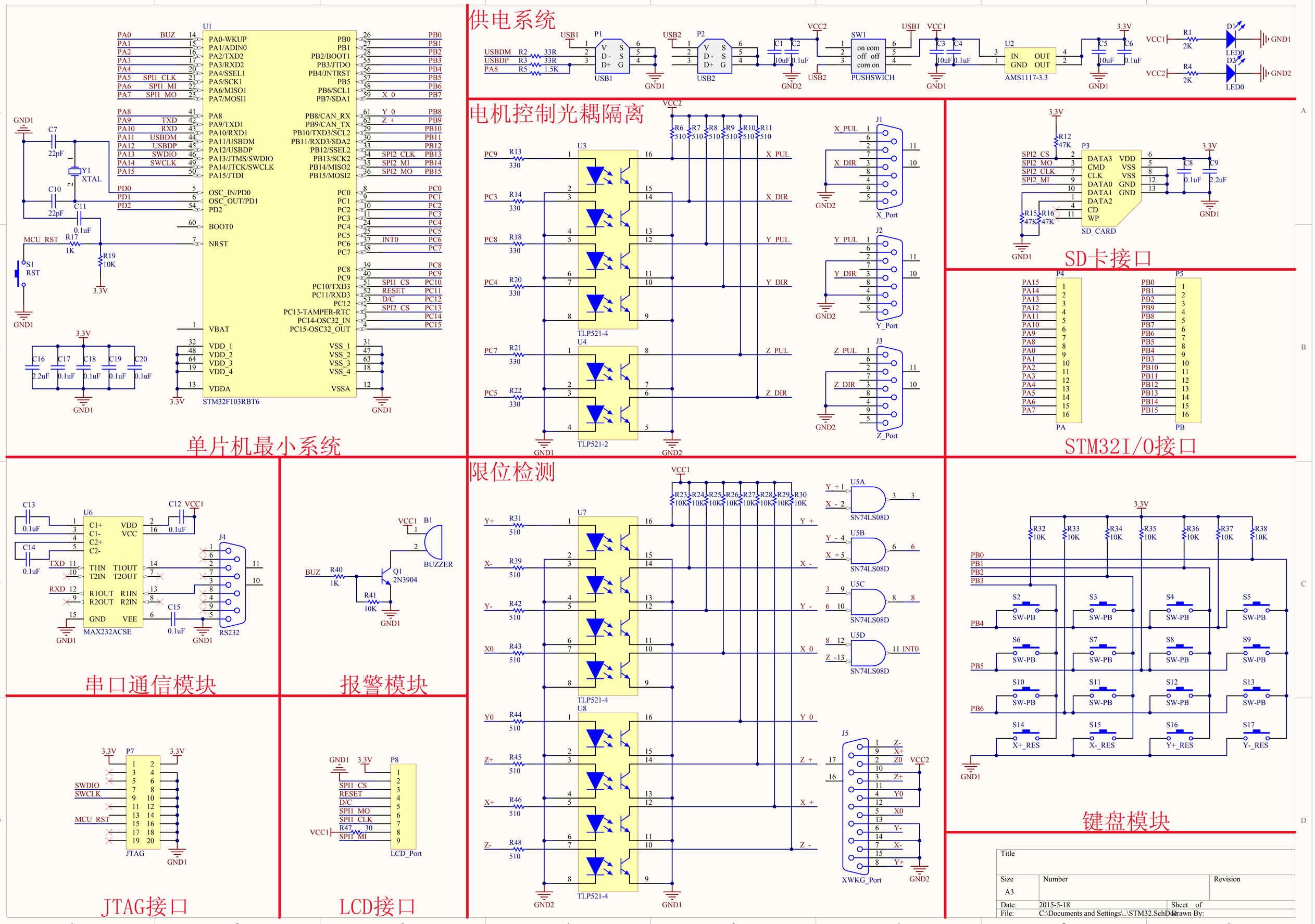
供电系统
USB1
P1
USB2
P2
USBDM R2 33R
USBDP R3 33R
PA8 R5 1.5K
C1 C2
10uF 0.1uF
VCC2
SW1
on com
off off
com on
PUSHSWICH
VCC1
C3 C4
U2
IN OUT
GND OUT
AMS1117-3.3
3.3V
C5 C6
R1 2K
R4 2K
D1 LED0
D2 LED0
GND1
GND2
电机控制光耦隔离
U3
U4
TLP521-4
TLP521-2
R6 R7 R8 R9 R10 R11 510
PC9 R13 330
PC3 R14 330
PC8 R18 330
PC4 R20 330
PC7 R21 330
PC5 R22 330
X_PUL
X_DIR
Y_PUL
Y_DIR
Z_PUL
Z_DIR
J1
J2
J3
X_Port
Y_Port
Z_Port
SD卡接口
R12 47K
P3
SD_CARD
SPI2_CS
SPI2_MO
SPI2_CLK
SPI2_MI
DATA3 VDD
CMD VSS
CLK VSS
DATA0 GND
DATA1 GND
DATA2
CD
WP
C8 0.1uF
C9 2.2uF
R15 47K
R16 47K
STM32I/O接口
P4
P5
PA
PB
单片机最小系统
U1
STM32F103RBT6
PA0-WKUP
PA1/ADIN0
PA2/TXD2
PA3/RXD2
PA4/SSEL1
PA5/SCK1
PA6/MISO1
PA7/MOSI1
PA8
PA9/TXD1
PA10/RXD1
PA11/USBDM
PA12/USBDP
PA13/JTMS/SWDIO
PA14/JTCK/SWCLK
PA15/JTDI
OSC_IN/PD0
OSC_OUT/PD1
PD2
BOOT0
NRST
VBAT
VDD_1
VDD_2
VDD_3
VDD_4
VDDA
VSS_1
VSS_2
VSS_3
VSS_4
VSSA
PB0/BOOT1
PB1
PB2/BOOT1
PB3/JTDO
PB4/JNTRST
PB5
PB6/SCL1
PB7/SDA1
PB8/CAN_RX
PB9/CAN_TX
PB10/TXD3/SCL2
PB11/RXD3/SDA2
PB12/SSEL2
PB13/SCK2
PB14/MISO2
PB15/MOSI2
PC0
PC1
PC2
PC3
PC4
PC5
PC6
PC7
PC8
PC9
PC10/TXD3
PC11/RXD3
PC12
PC13-TAMPER-RTC
PC14-OSC32_IN
PC15-OSC32_OUT
BUZ
TXD
RXD
USBDM
USBDP
SPI1_CLK
SPI1_MI
SPI1_MO
X_0
Y_0
Y_+
INT0
SPI1_CS
RESET
D/C
SPI2_CS
SPI2_MI
SPI2_MO
C7 22pF
C10 22pF
Y1 XTAL
C11 0.1uF
MCU_RST
R17 1K
R19 10K
S1 RST
C16 2.2uF
C17 0.1uF
C18 0.1uF
C19 0.1uF
C20 0.1uF
限位检测
U7
U8
TLP521-4
R23 R24 R25 R26 R27 R28 R29 R30 10K
Y+ R31 510
X- R39 510
Y- R42 510
X0 R43 510
Y0 R44 510
Z+ R45 510
X+ R46 510
Z- R48 510
U5A
U5B
U5C
U5D
SN74LS08D
INT0
J5
XWKG_Port
键盘模块
R32 R33 R34 R35 R36 R37 R38 10K
S2 S3 S4 S5
S6 S7 S8 S9
S10 S11 S12 S13
S14 S15 S16 S17
SW-PB
X+_RES
X-_RES
Y+_RES
Y-_RES
串口通信模块
U6
MAX232ACSE
C13 0.1uF
C14 0.1uF
C12 0.1uF
C15 0.1uF
J4
RS232
报警模块
B1
BUZZER
Q1 2N3904
R40 1K
R41 10K
JTAG接口
P7
JTAG
LCD接口
P8
LCD_Port
R47 30
Title
Size A3
Number
Revision
Date: 2015-5-18
Sheet of
File: C:\Documents and Settings\...\STM32.SchDoc
Drawn By: