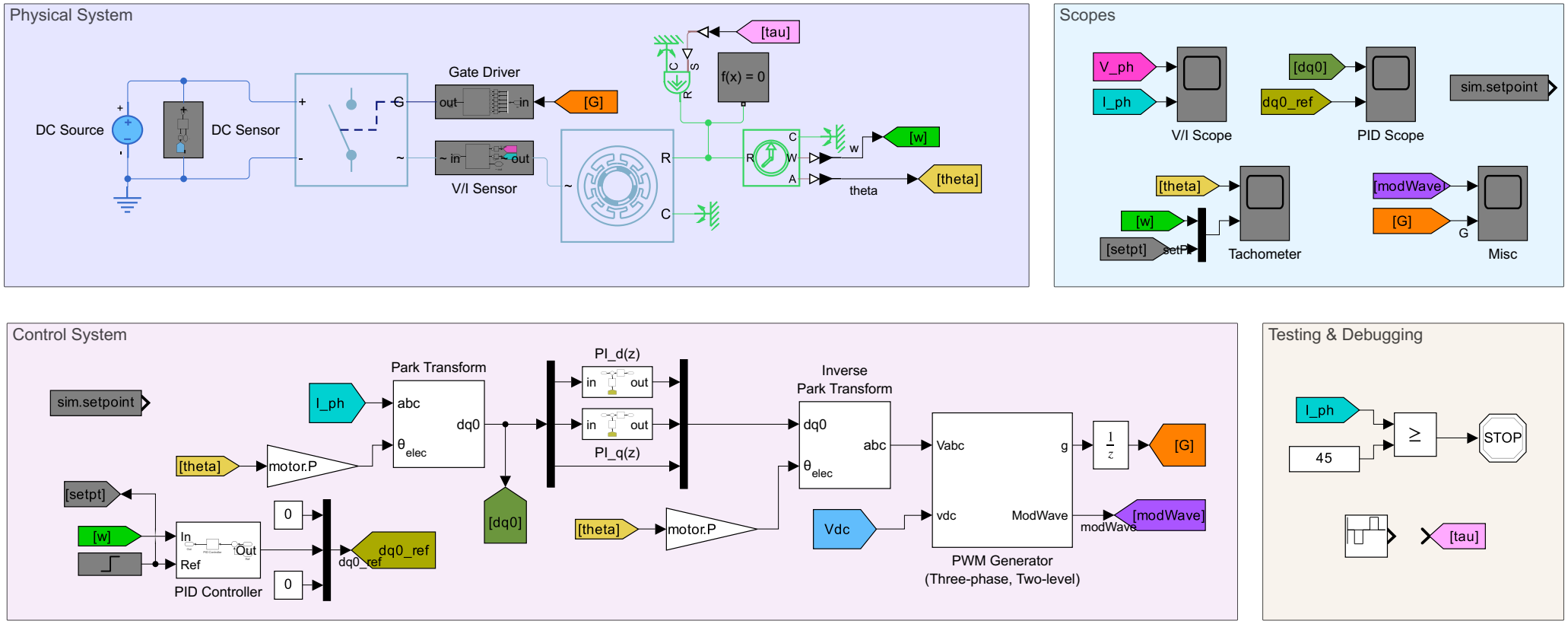
Physical System
DC Source
DC Sensor
Gate Driver
out
in
[G]
V/I Sensor
~ in
~ out
[tau]
f(x) = 0
R
C
S
R
C
W
A
w
theta
[w]
[theta]
Scopes
V_ph
I_ph
V/I Scope
[dq0]
dq0_ref
PID Scope
sim.setpoint
[theta]
[w]
[setpt]
setP
Tachometer
[modWave]
[G]
G
Misc
Control System
sim.setpoint
I_ph
Park Transform
abc
dq0
θ elec
[theta]
motor.P
[setpt]
[w]
In
Out
Ref
PID Controller
0
0
dq0_ref
dq0_ref
[dq0]
PI_d(z)
in
out
in
out
PI_q(z)
[theta]
motor.P
Inverse
Park Transform
dq0
abc
θ elec
Vdc
Vabc
g
vdc
ModWave
PWM Generator
(Three-phase, Two-level)
1/z
[G]
[modWave]
modWave
Testing & Debugging
I_ph
45
≥
STOP
[tau]

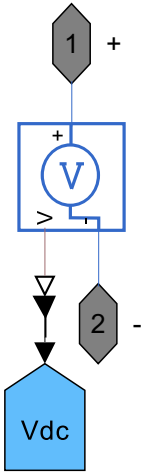
1
+
+
V
>
2
-
Vdc

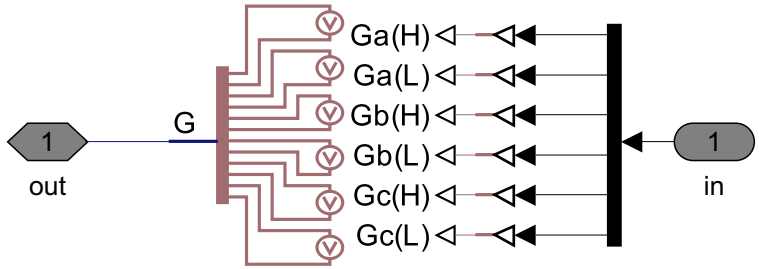
1
out
G
Ga(H)
Ga(L)
Gb(H)
Gb(L)
Gc(H)
Gc(L)
1
in

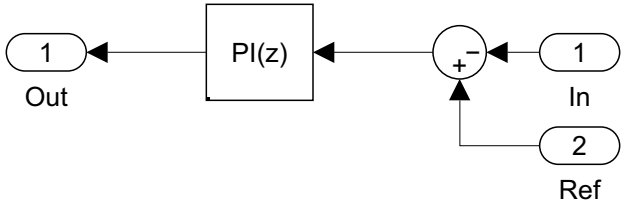
1
Out
PI(z)
+
−
1
In
2
Ref

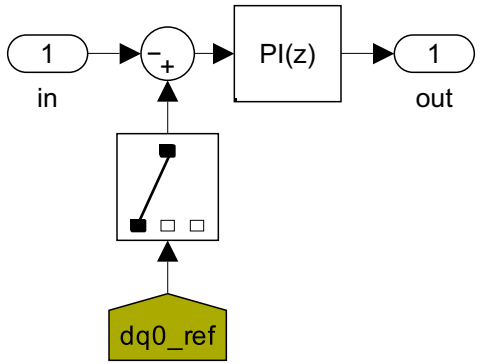
1
in
−
+
PI(z)
1
out
dq0_ref

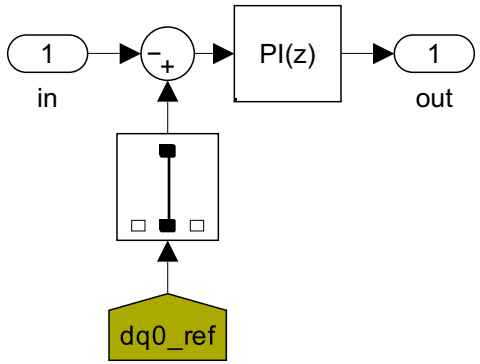
1
in
−
+
PI(z)
1
out
dq0_ref

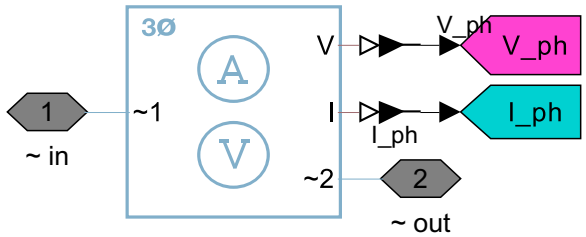
3Ø
A
V
~1
V
I
~2
1
~ in
2
~ out
V_ph
V_ph
I_ph
I_ph