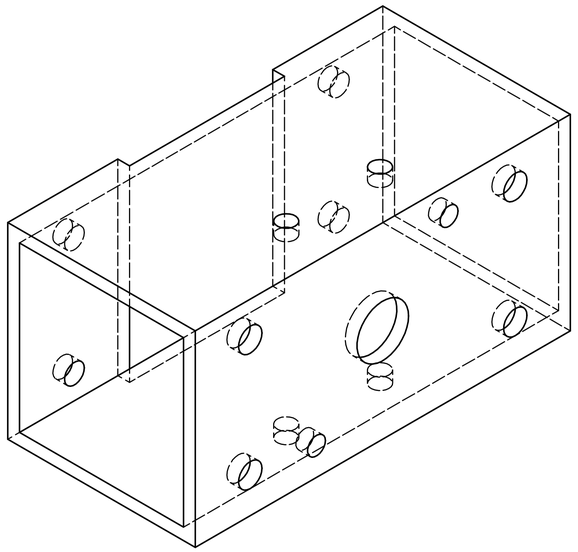

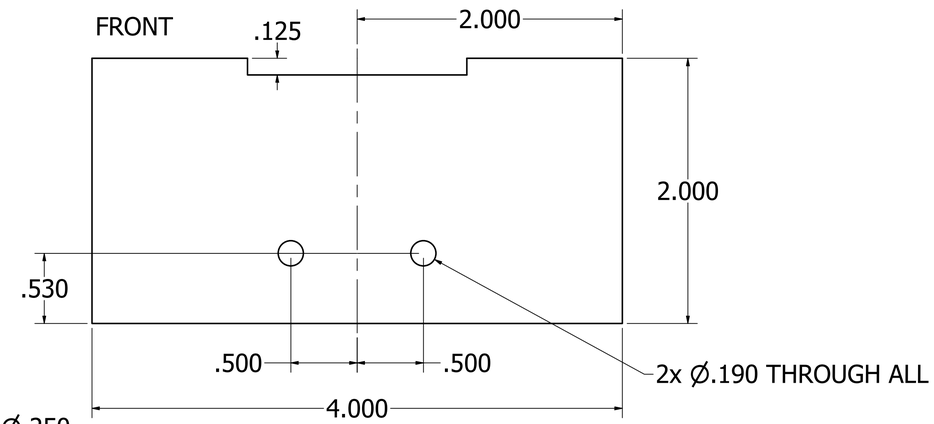

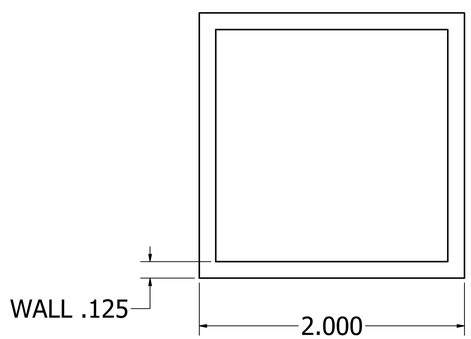

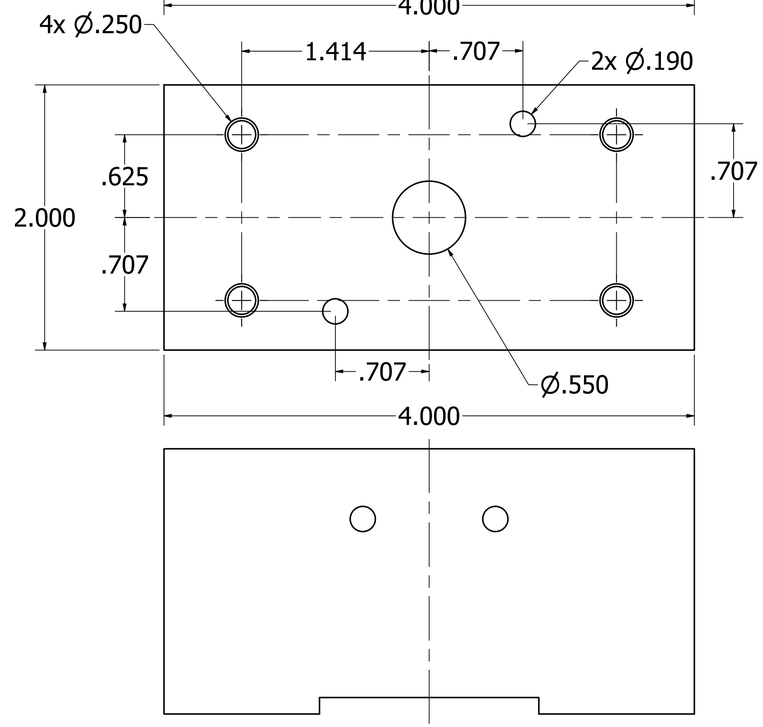

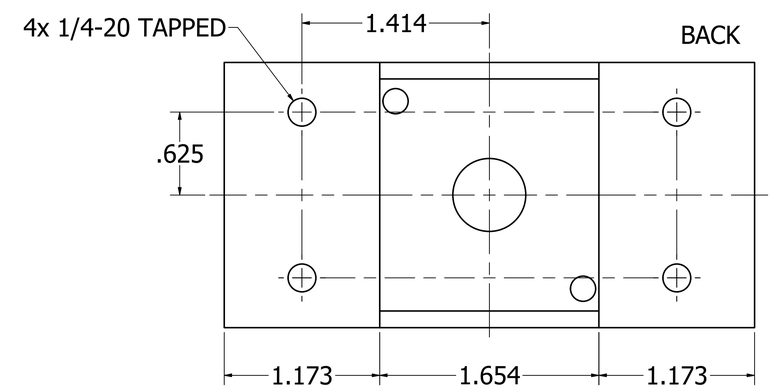

ALL DIMENSIONS IN INCHES

QUANTITY: 4

DRAWN Adhikara Budhyhartono	11/3/2018	RPI Rock Raiders
CHECKED		TITLE Drive Mount A
QA		
MFG		
APPROVED		SIZE D / DWG NO Drive Mount A / REV
		SCALE 1.75 / SHEET 1 OF 1