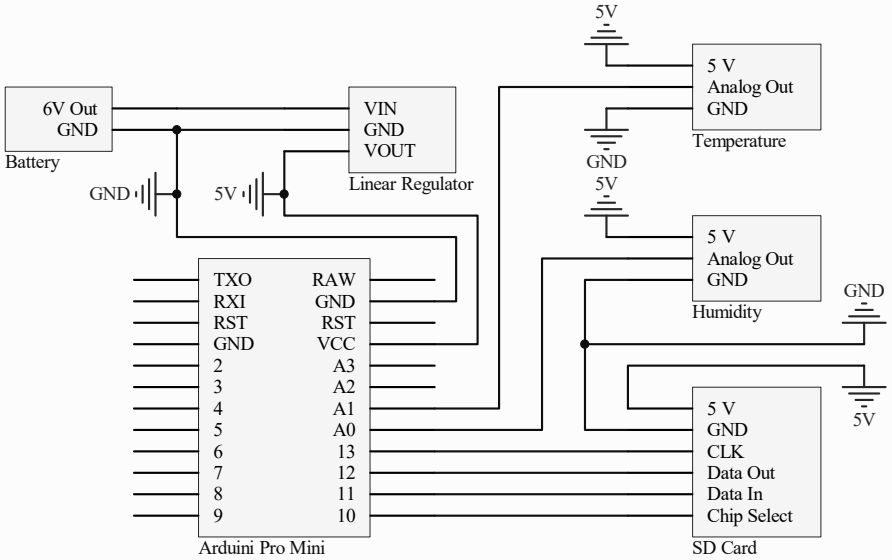

Title *			
Size: A	Number: *	Revision: *	
Date: 4/25/2017	Time: 7:31:08 PM	Sheet * of *	
File: C:\Users\viny4503\repos\Rocket-Sat-11-PCB\PCB_Project_EnviroSys\Schematic_EnivoSys.SchDoc			