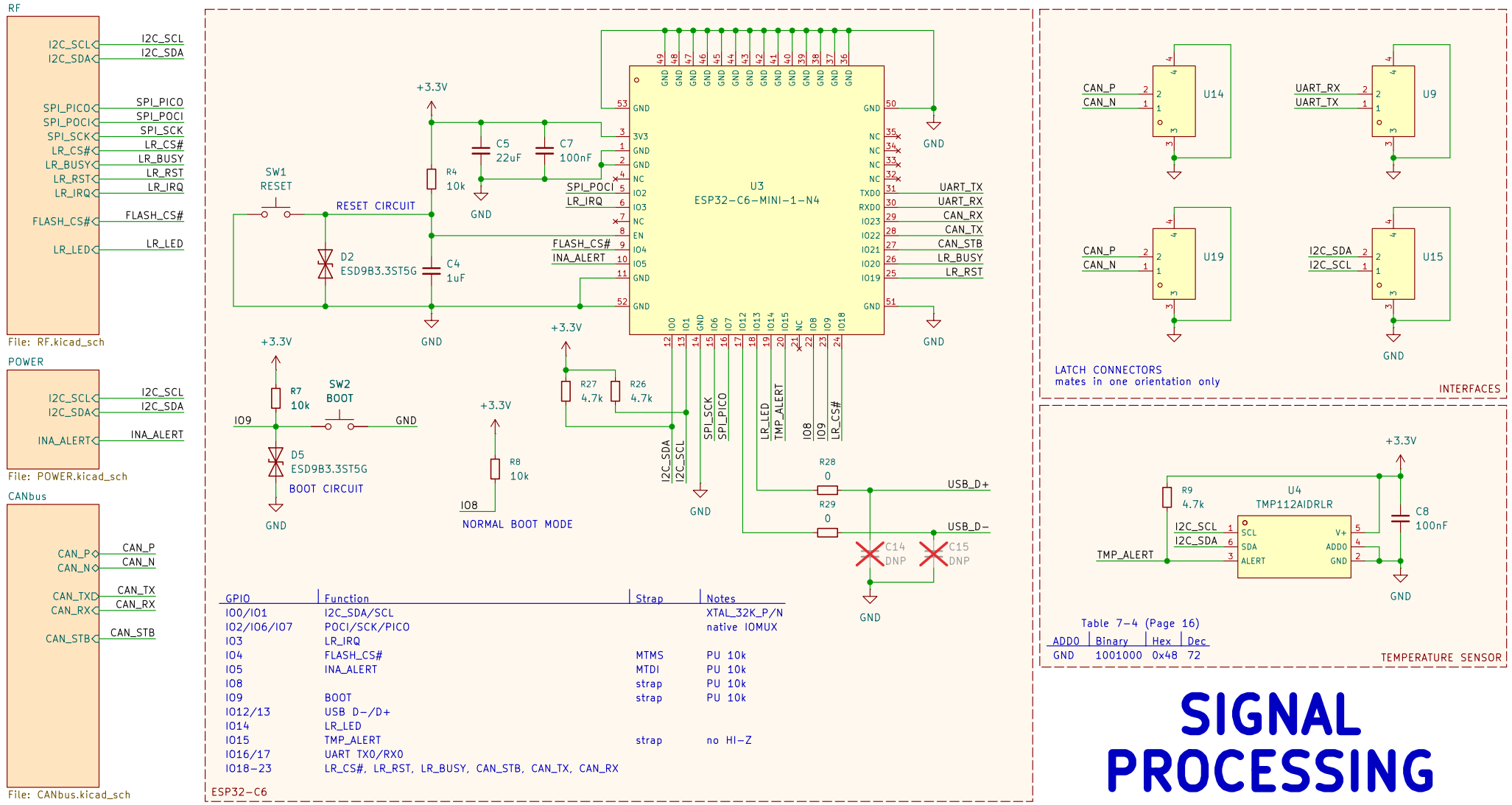

Name/Signature	Date
Drawn: Rodrigo Andrade	2026-08-12
Reviewed	
Approved (1)	
Approved (2)	

Title

LIONv3

Engineering the communication infrastructure that connects us to space.

Date	Revision	Size
2026-08-12	0.1	A4
Software: KiCad E.D.A. 10.0.3	Sheet: 1/4	Code: v3-Rodrigo

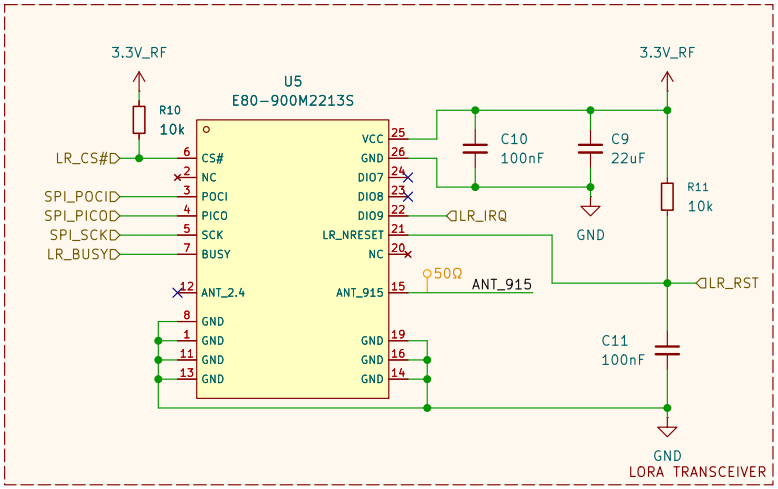

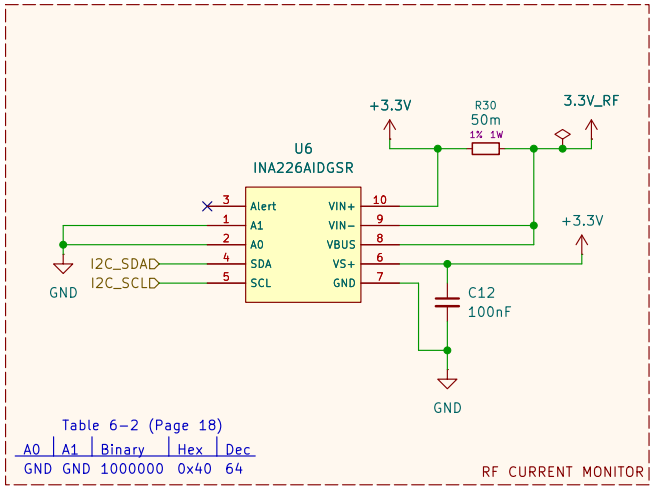

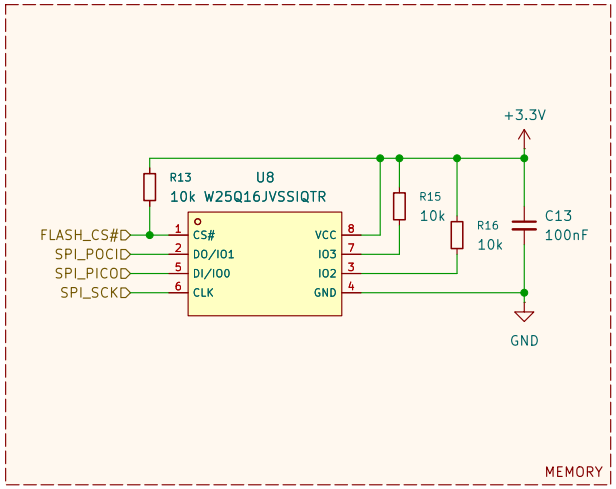

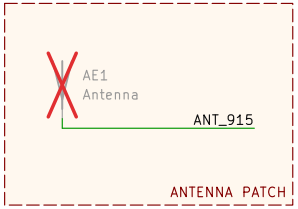

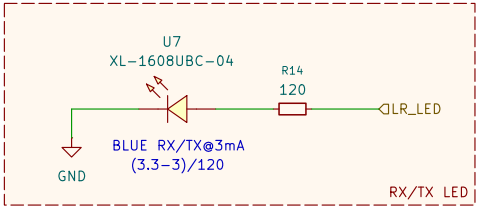

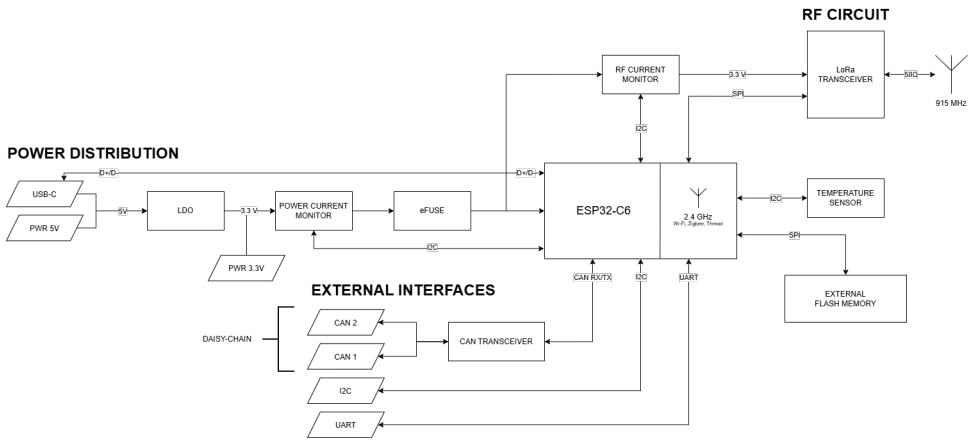

RF CIRCUIT

Name/Signature		Date	Title
Drawn: Rodrigo Andrade		2026-08-12	LIONv3
Reviewed			Engineering the communication infrastructure that connects us to space.
Approved (1)			Date: 2026-08-12 · Revision: 0.1 · Size: A4
Approved (2)			Software: KiCad E.D.A. 10.0.3 · Sheet: 2/4 · Code: v3-Rodrigo

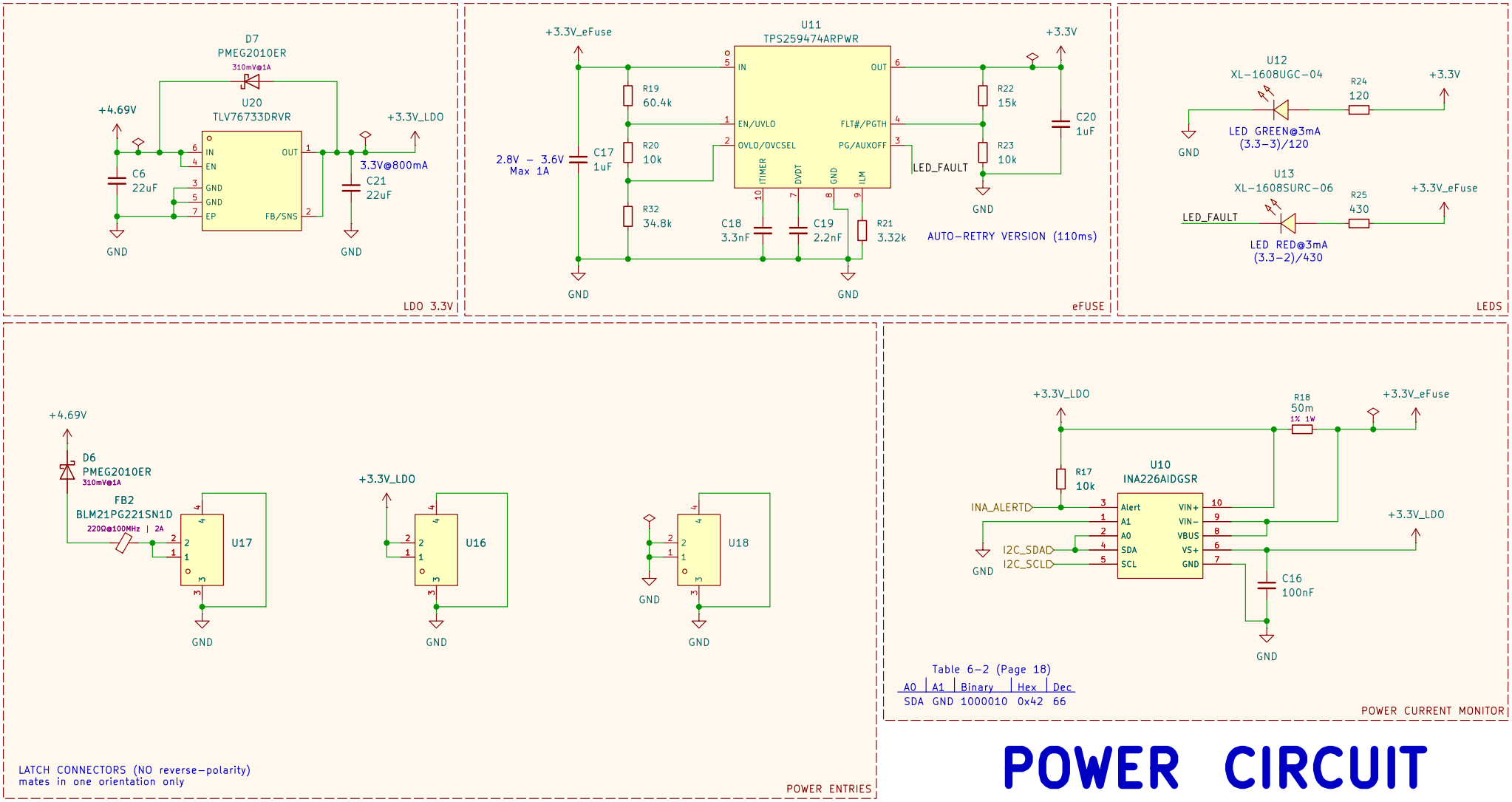

POWER CIRCUIT

Name/Signature		Date
Drawn: Rodrigo Andrade		2026-08-12
Reviewed		
Approved (1)		
Approved (2)		

Title: **LIONv3**

Engineering the communication infrastructure that connects us to space.

Date	Revision	Size
2026-08-12	0.1	A4
Software: KiCad E.D.A. 10.0.3	Sheet: 3/4	Code: v3-Rodrigo

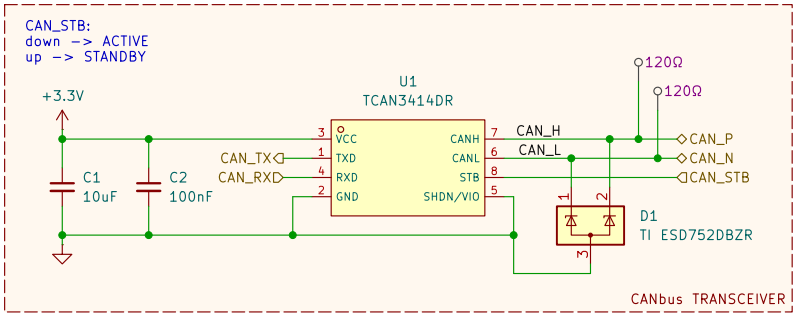

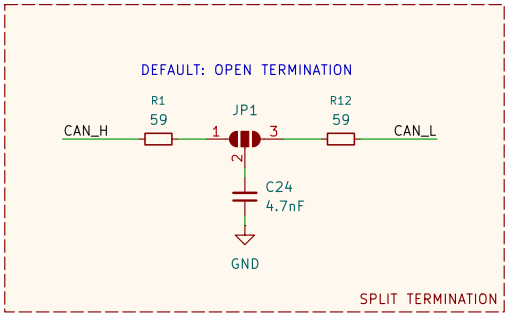

CANbus

Name/Signature		Date
Drawn **Rodrigo Andrade**		**2026-08-12**
Reviewed		
Approved (1)		
Approved (2)		

Title

LIONv3

Engineering the communication infrastructure that connects us to space.

Date	Revision	Size
2026-08-12	**0.1**	**A4**
Software **KiCad E.D.A. 10.0.3**	Sheet **4/4**	Code **v3-Rodrigo**