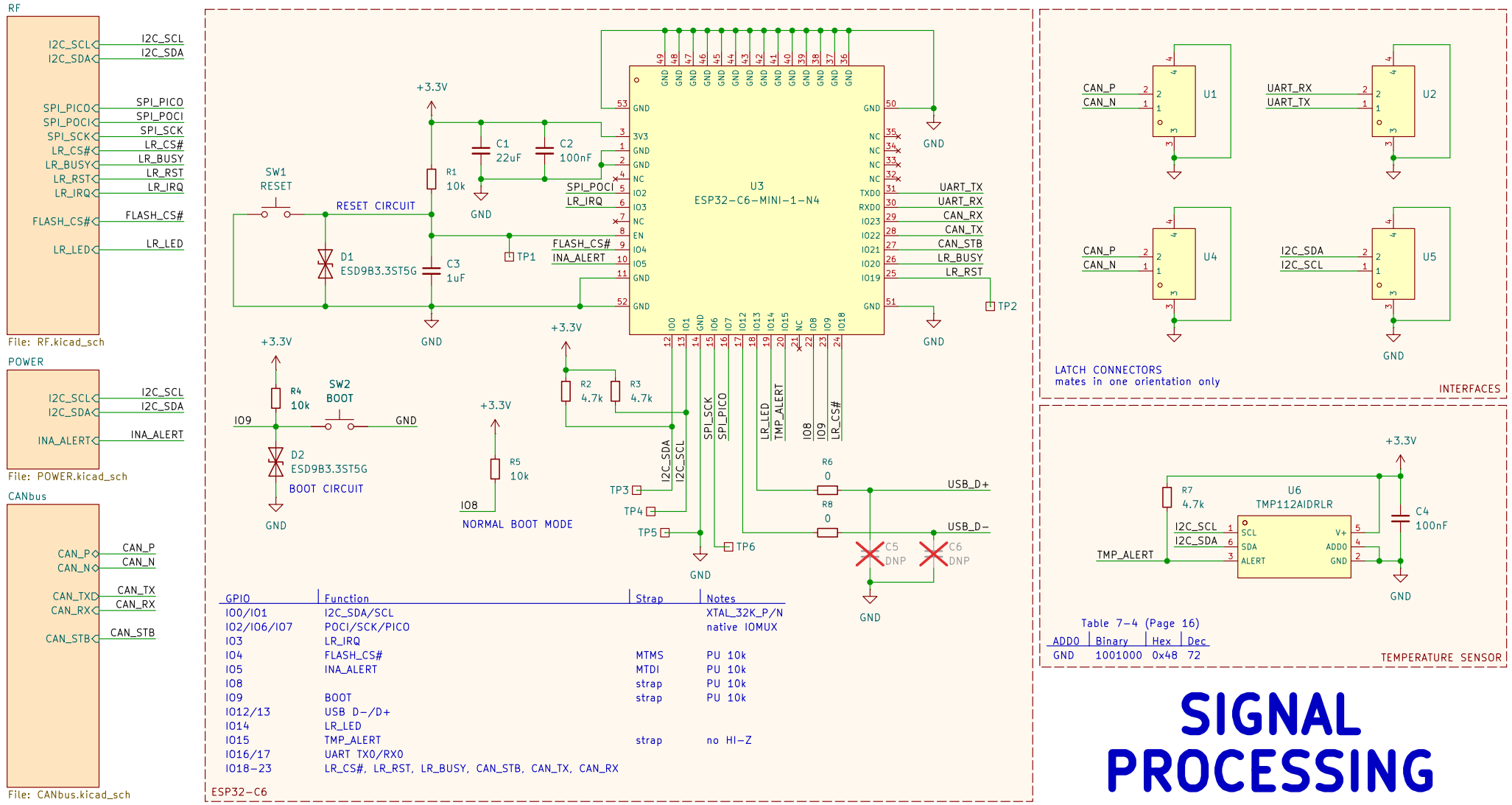

GPIO	Function	Strap	Notes
IO0/IO1	I2C_SDA/SCL		XTAL_32K_P/N
IO2/IO6/IO7	POCI/SCK/PICO		native IOMUX
IO3	LR_IRQ		
IO4	FLASH_CS#	MTMS	PU 10k
IO5	INA_ALERT	MTDI	PU 10k
IO8		strap	PU 10k
IO9	BOOT	strap	PU 10k
IO12/13	USB D-/D+		
IO14	LR_LED		
IO15	TMP_ALERT	strap	no HI-Z
IO16/17	UART TX0/RX0		
IO18-23	LR_CS#, LR_RST, LR_BUSY, CAN_STB, CAN_TX, CAN_RX		

Name/Signature	Date
Drawn: Rodrigo Andrade	2026-08-12
Reviewed: Rodrigo Andrade	2026-09-14
Approved (1)	
Approved (2)	

Title
LIONv3

Engineering the communication infrastructure that connects us to space.

Date	Revision	Size
2026-08-12	1.0	A4
Software: KiCad E.D.A. 10.0.2	Sheet: 1/4	Code: v3-Rodrigo

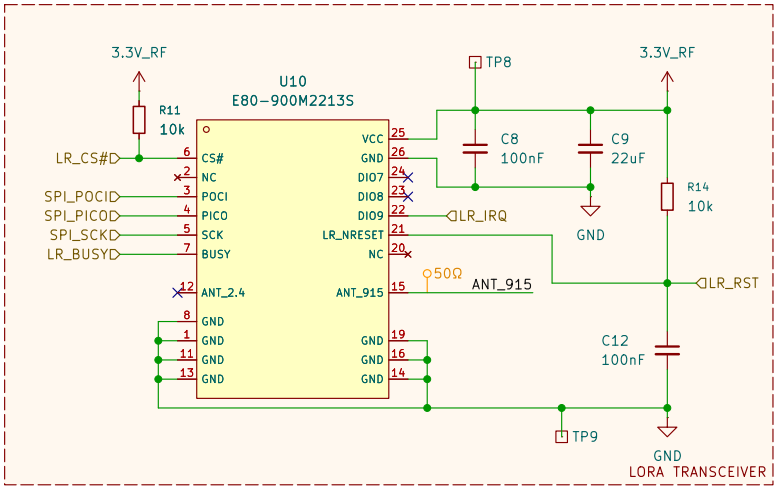

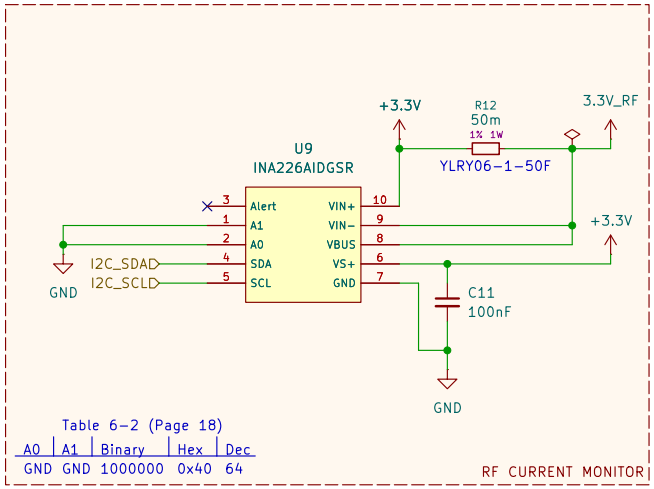

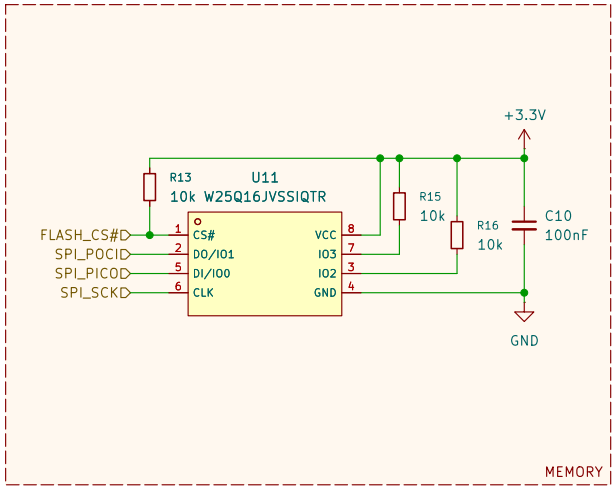

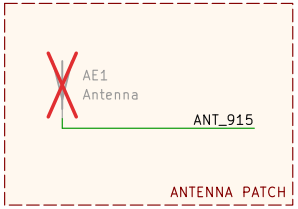

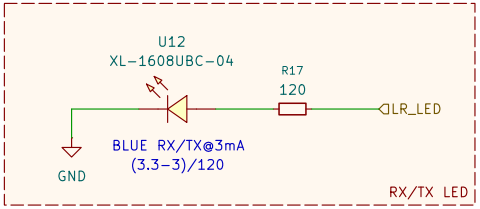

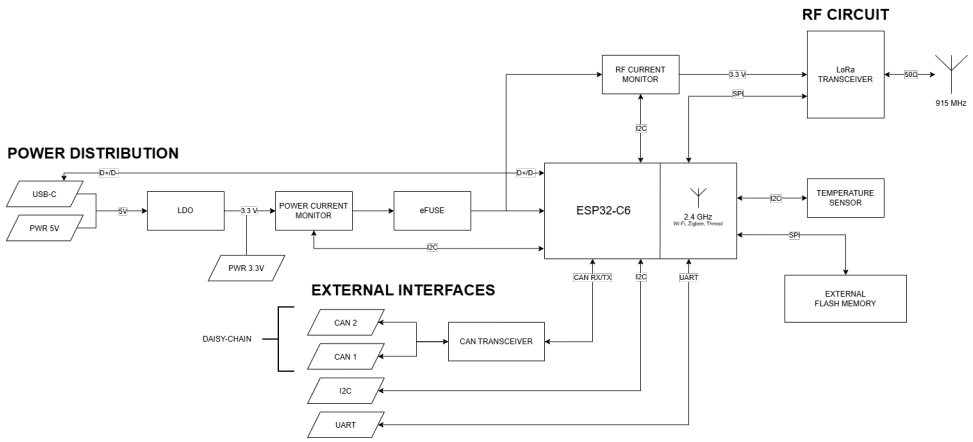

RF CIRCUIT

Name/Signature		Date	Title
Drawn: Rodrigo Andrade		2026-08-12	LIONv3
Reviewed: Rodrigo Andrade		2026-09-14	Engineering the communication infrastructure that connects us to space.
Approved (1)			Date: 2026-08-12 / Revision: 1.0 / Size: A4
Approved (2)			Software: KiCad E.D.A. 10.0.2 / Sheet: 2/4 / Code: v3-Rodrigo

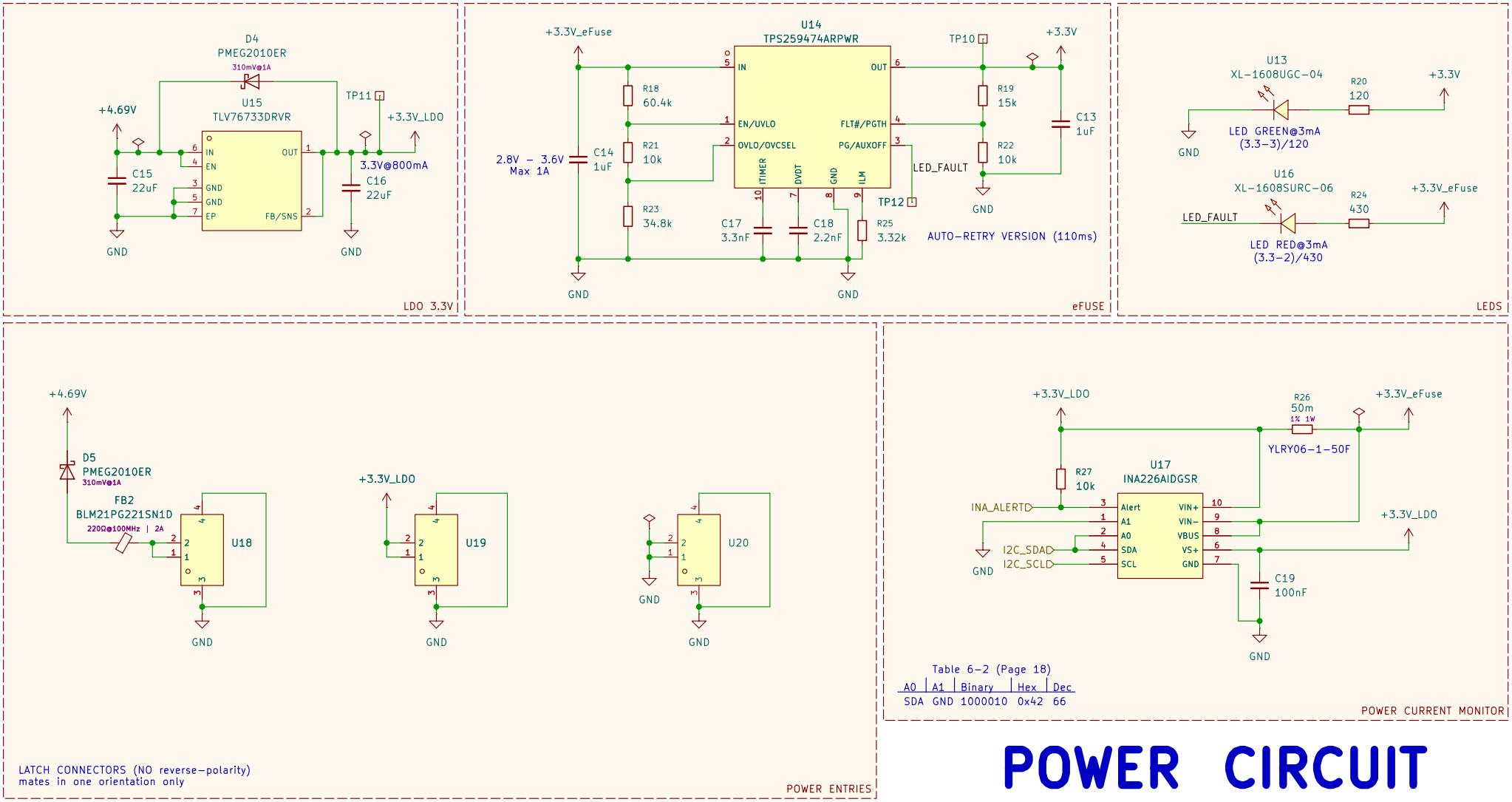

POWER CIRCUIT

Name/Signature		Date
Drawn: Rodrigo Andrade		2026-08-12
Reviewed: Rodrigo Andrade		2026-09-14
Approved (1)		
Approved (2)		

Title: **LIONv3**

Engineering the communication infrastructure that connects us to space.

Date	Revision	Size
2026-08-12	1.0	A4
Software: KiCad E.D.A. 10.0.2	Sheet: 3/4	Code: v3-Rodrigo

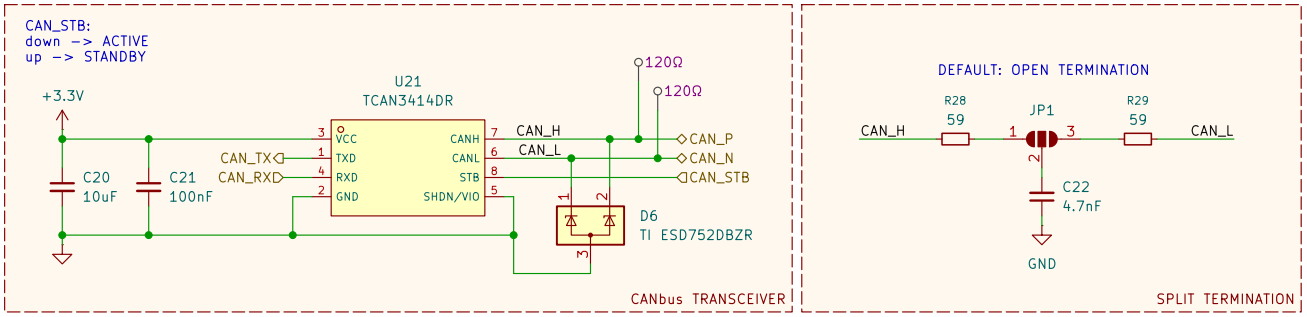

CANbus

Name/Signature		Date
Drawn: Rodrigo Andrade		2026-08-12
Reviewed: Rodrigo Andrade		2026-09-14
Approved (1)		
Approved (2)		

Title

LIONv3

Engineering the communication infrastructure that connects us to space.

Date	Revision	Size
2026-08-12	1.0	A4
Software: KiCad E.D.A. 10.0.2	Sheet: 4/4	Code: v3-Rodrigo