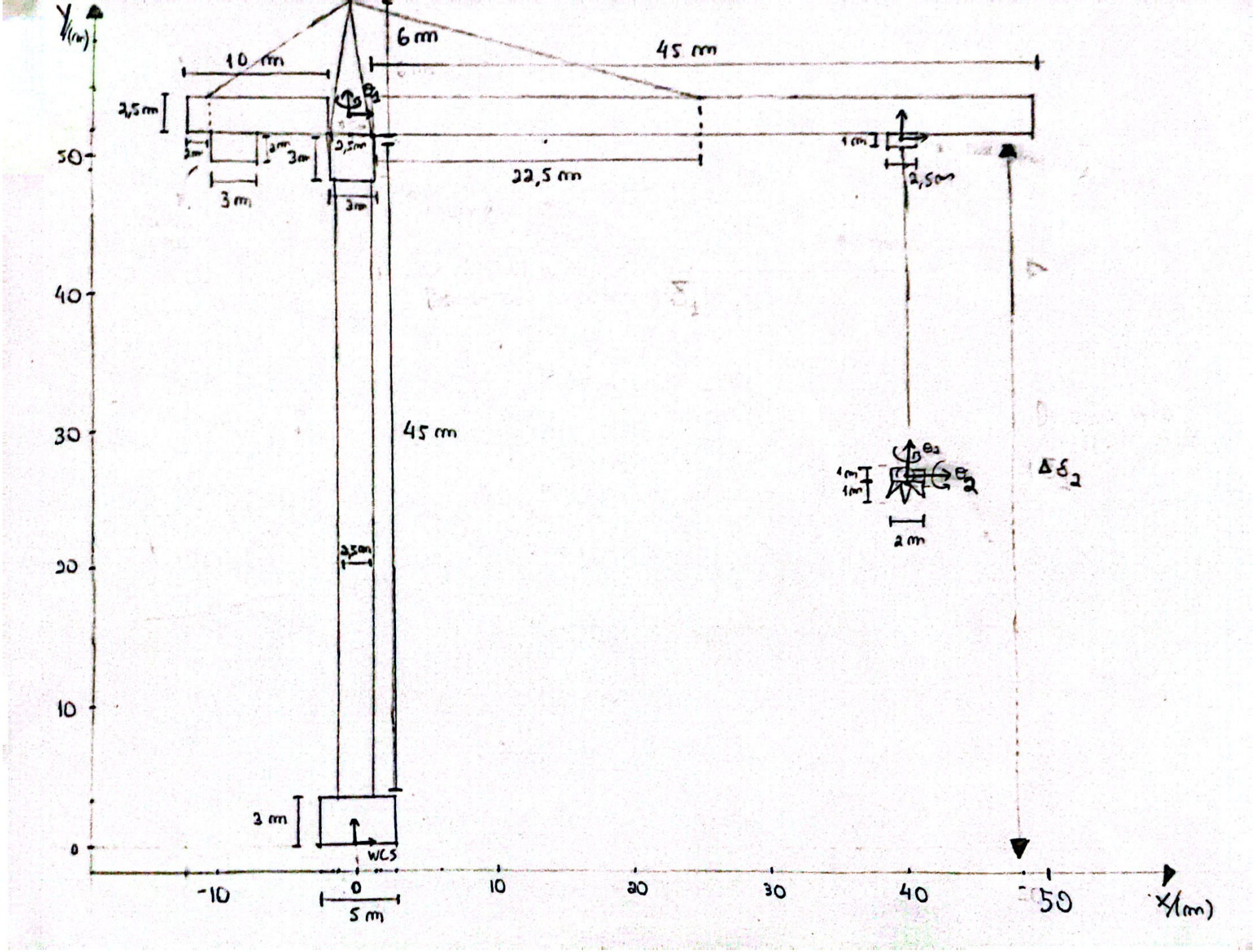

Scanned with CamScanner

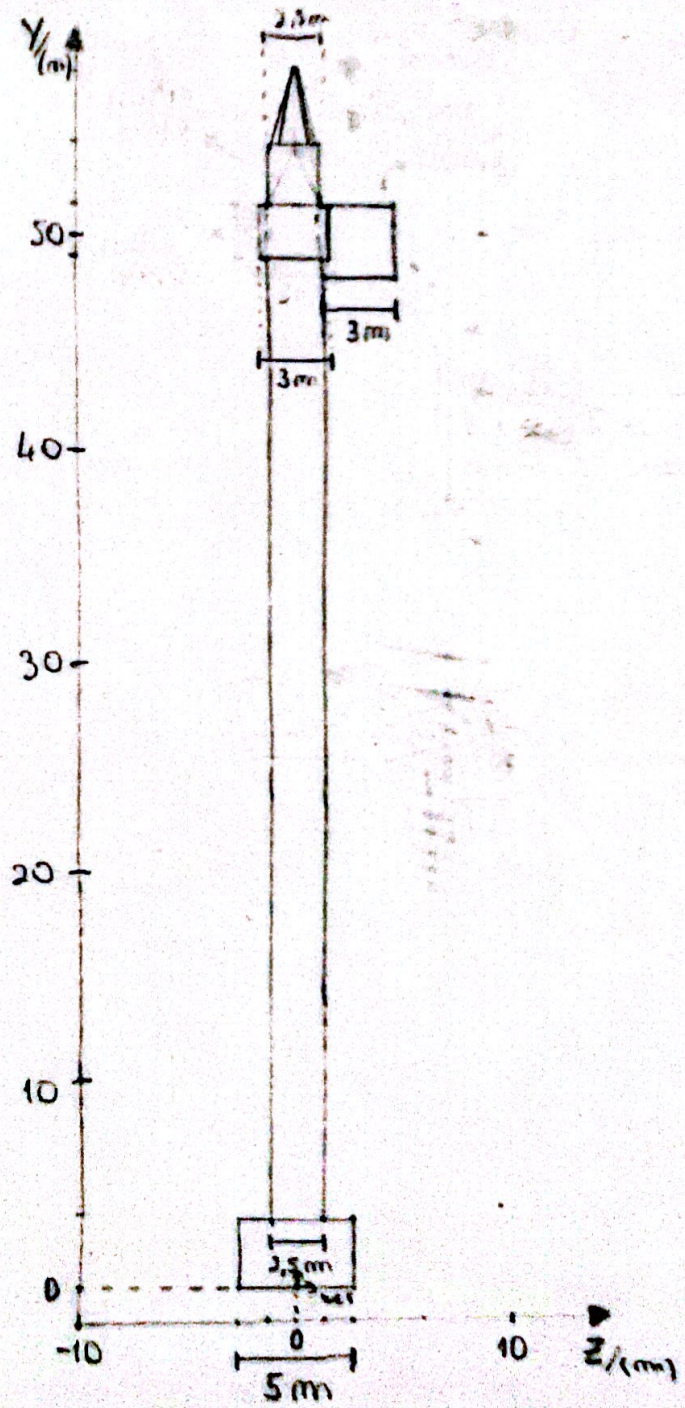

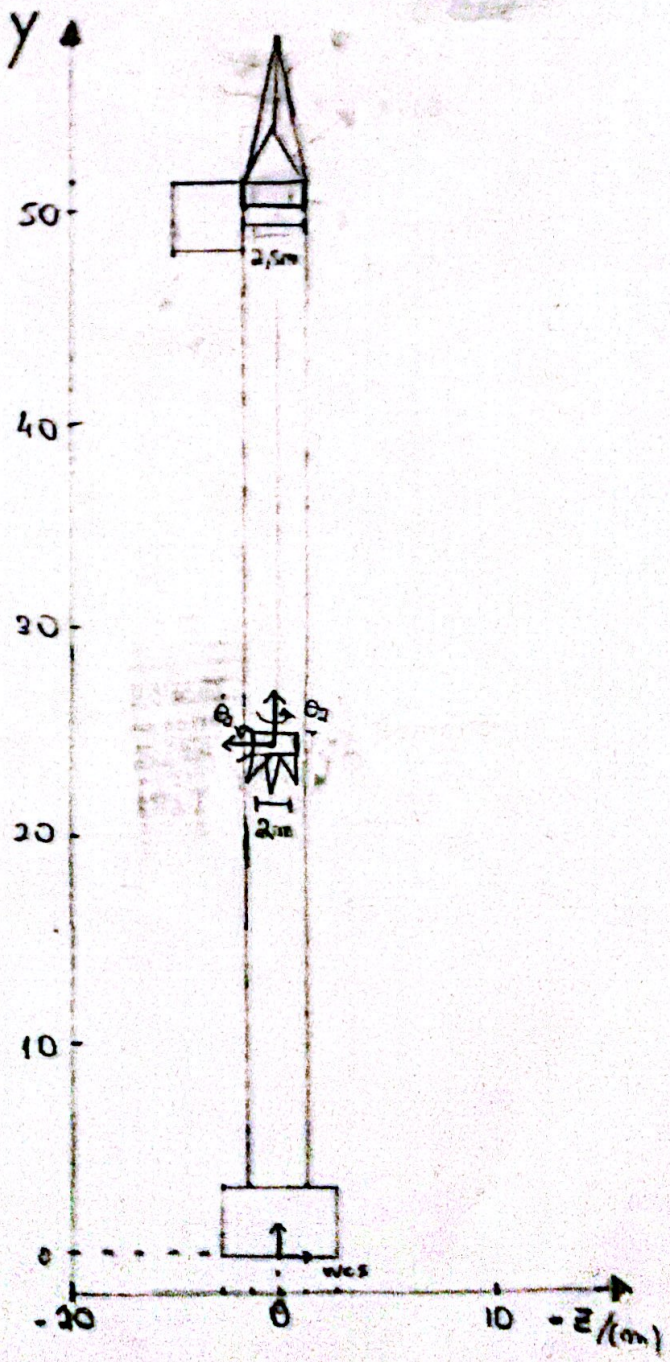

Scanned with CamScanner

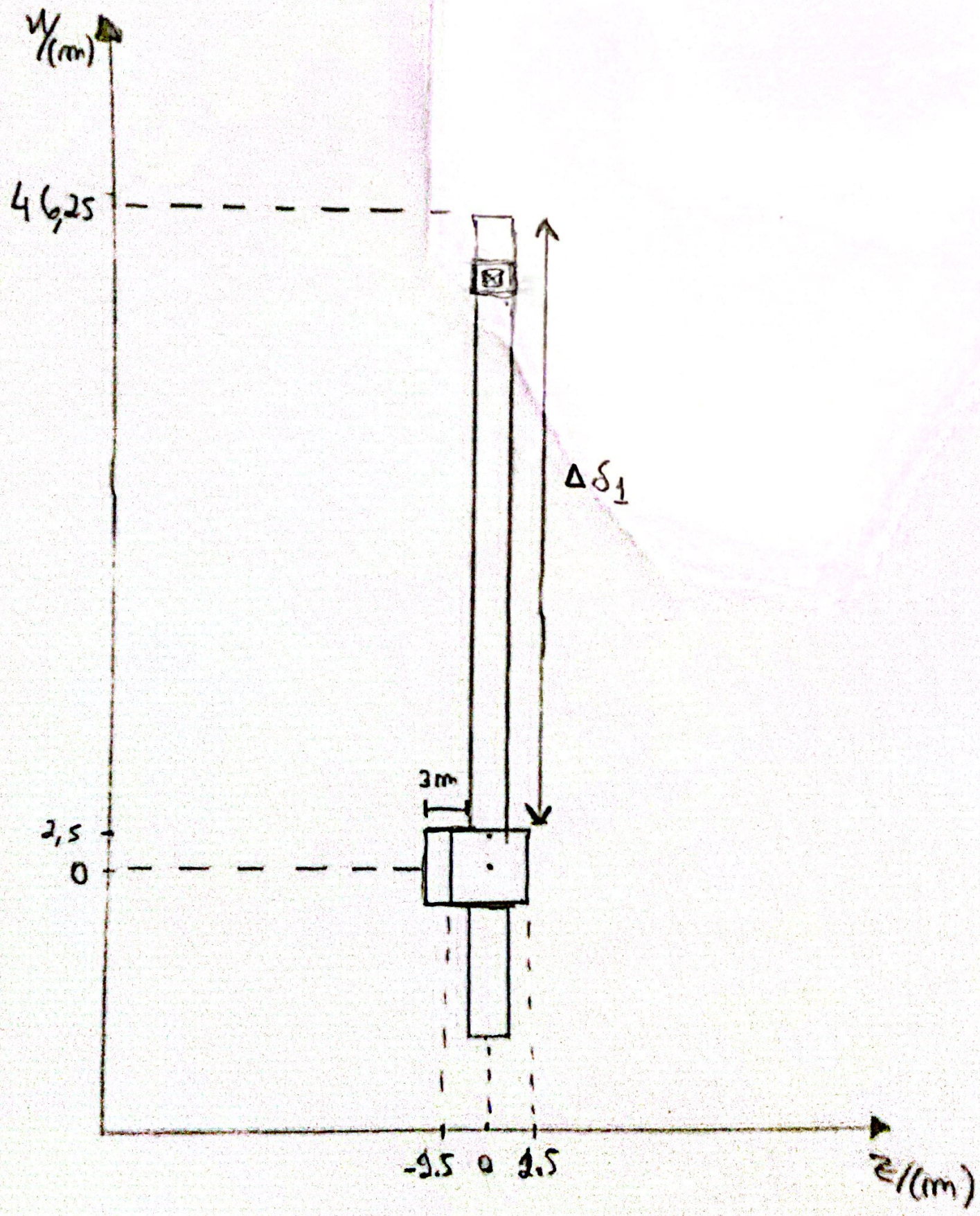

Scanned with CamScanner