# POWER_SUPPLY

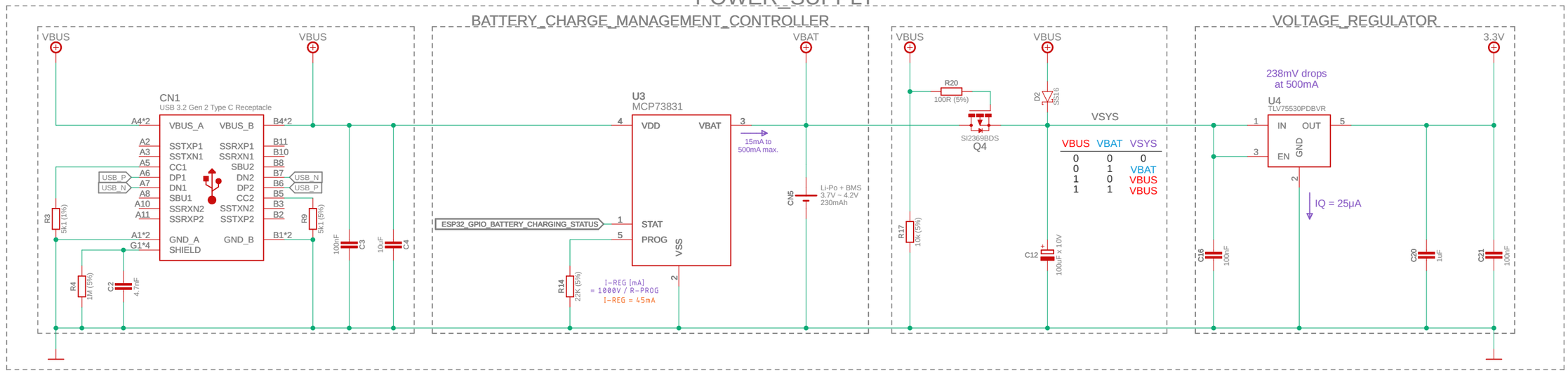


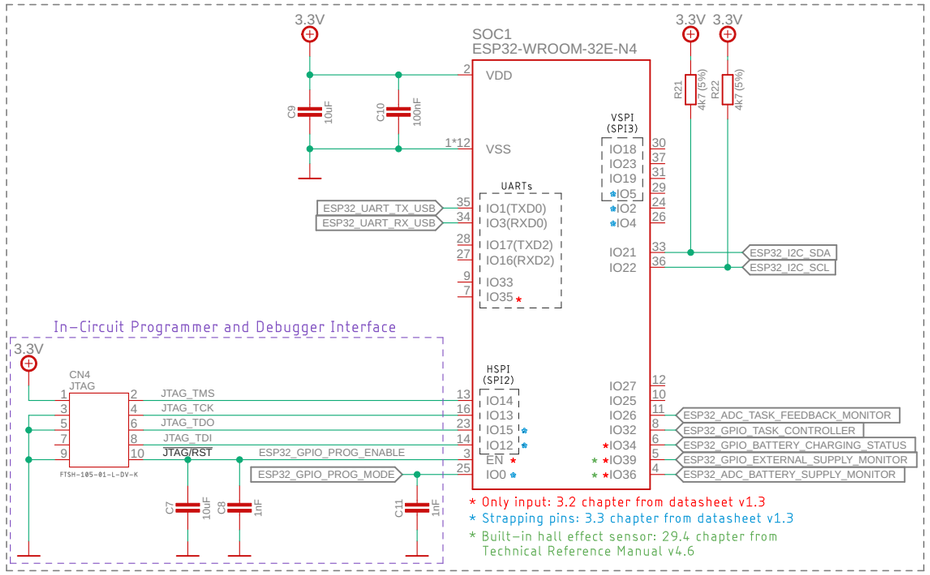


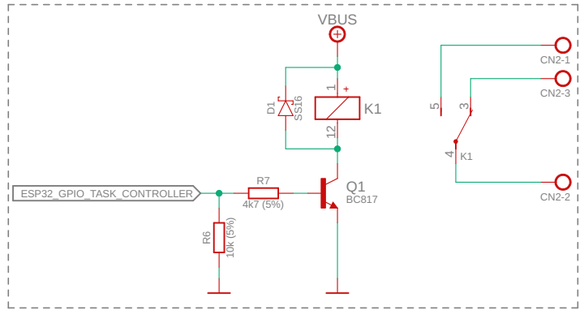


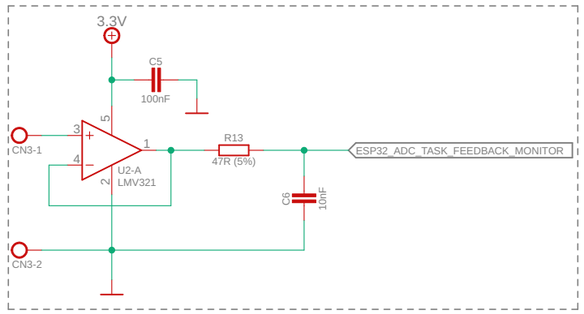


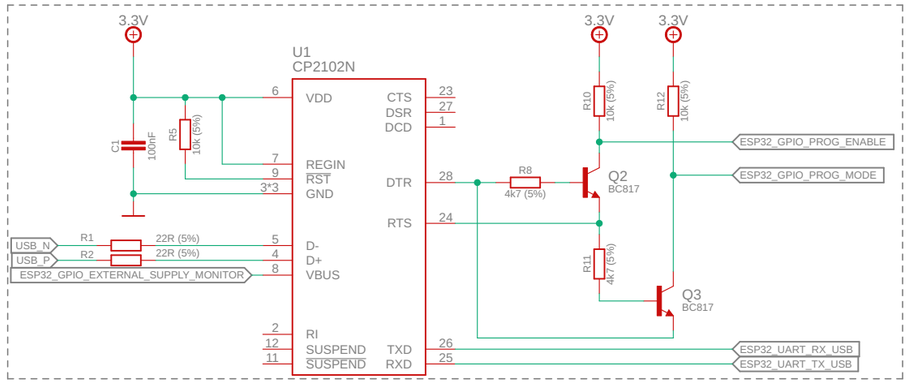


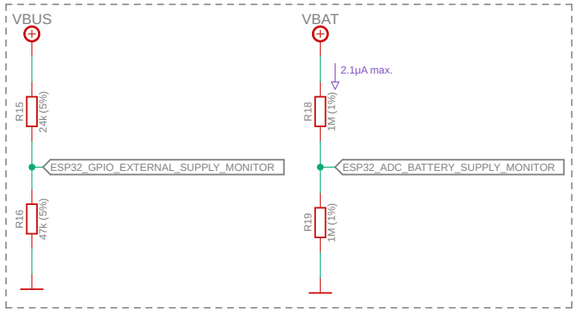


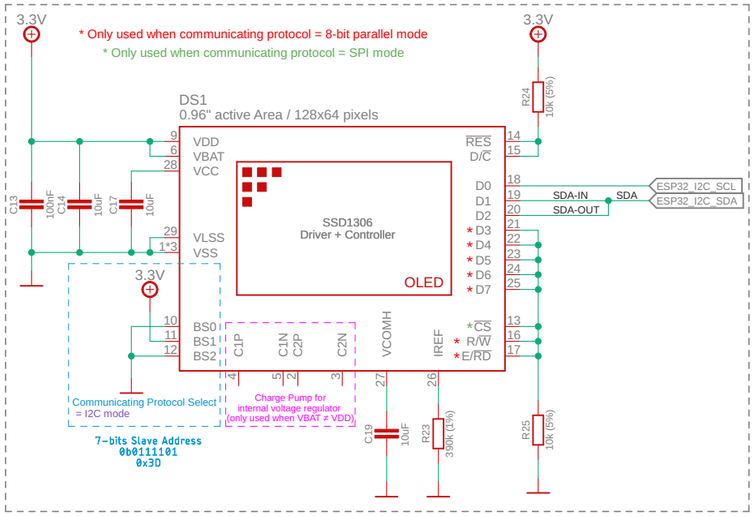


## REAL_TIME_CLOCK

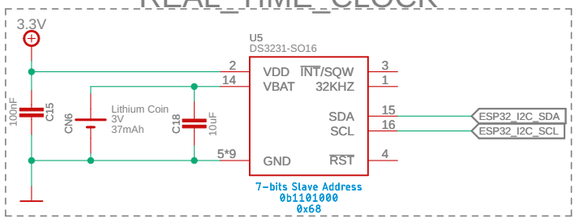


DESIGN BY:

Tiago Silva

github.com/TiagoPaulaSilva/It-s-Time-Do

open hardware

| | |
|---|---|
| PROJECT TITLE: It-s Time, Do | |
| SHEET TITLE: Complete Schematic | SHEET: 1/1 |
| DATE: 16/05/2022 08:58 | REV.: 1.1 |