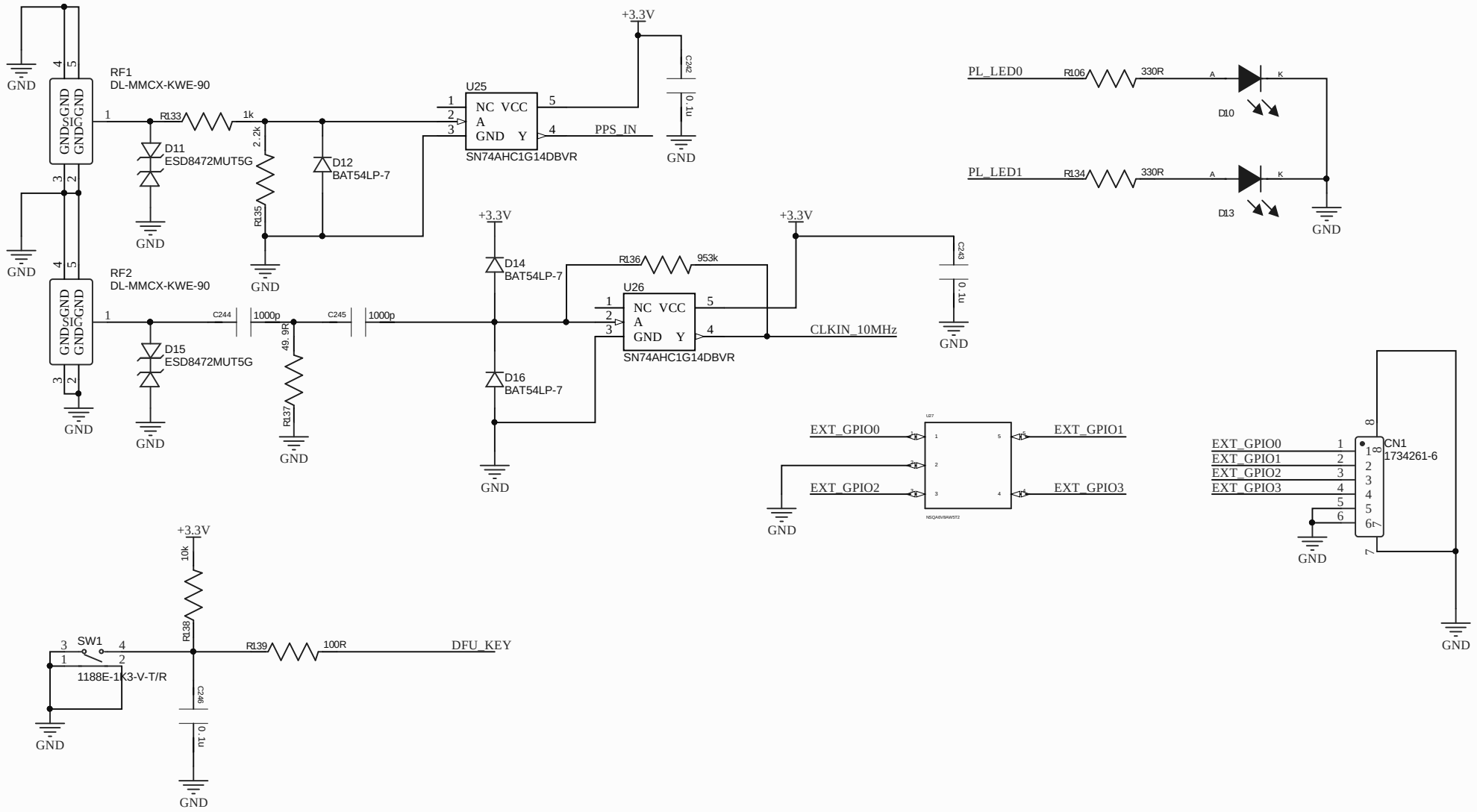

Title		
Size A4	Number	Revision
Date: 2022/11/8	Sheet of	
File: C:\Users\..\ACCESSORIES_PORT.SchDoc	Drawn By:	

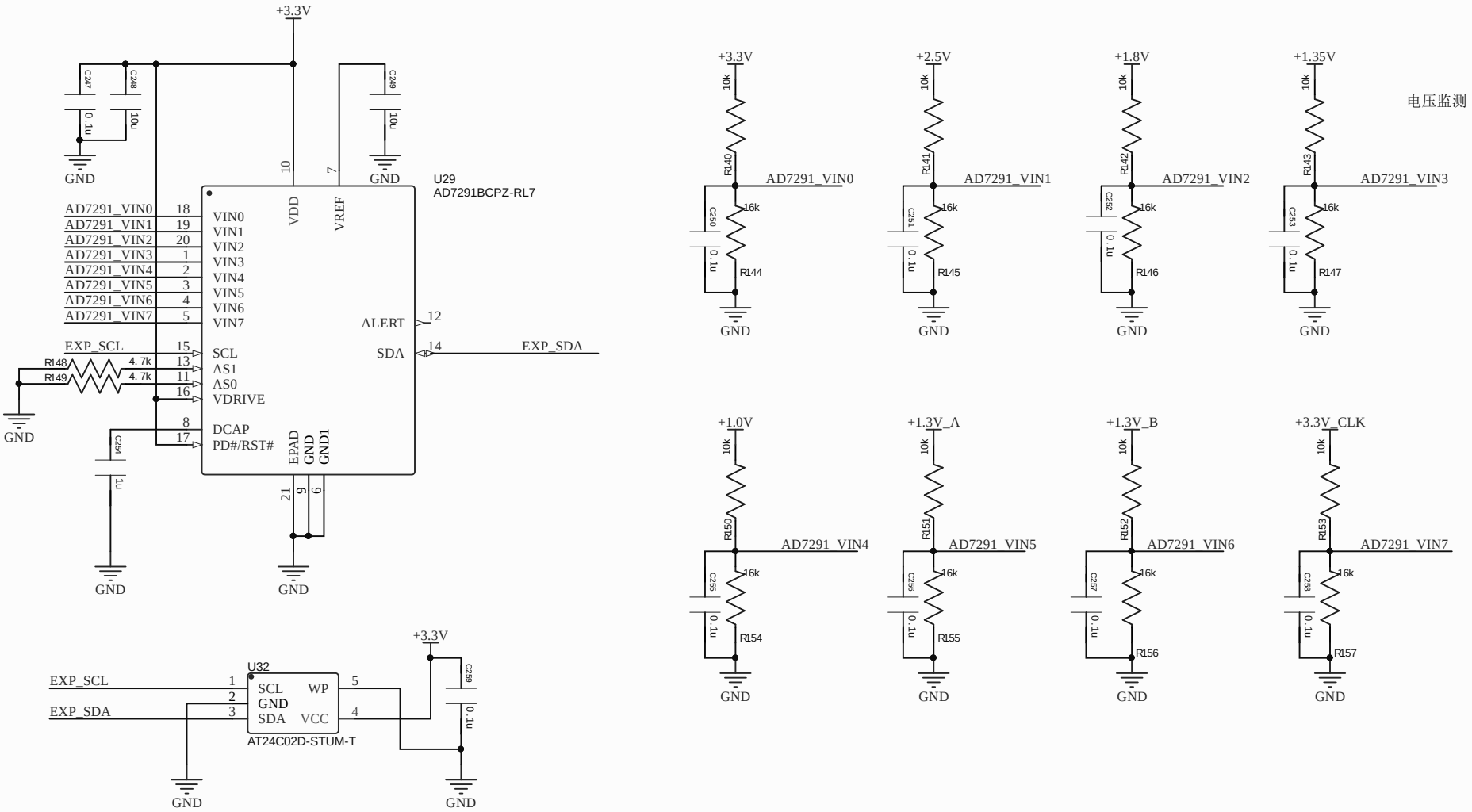

Title		
Size A4	Number	Revision
Date: 2022/11/8	Sheet of	
File: C:\Users\..\ACCESSORIESPARTSSchDoc.SchDoc	Drawn by:	

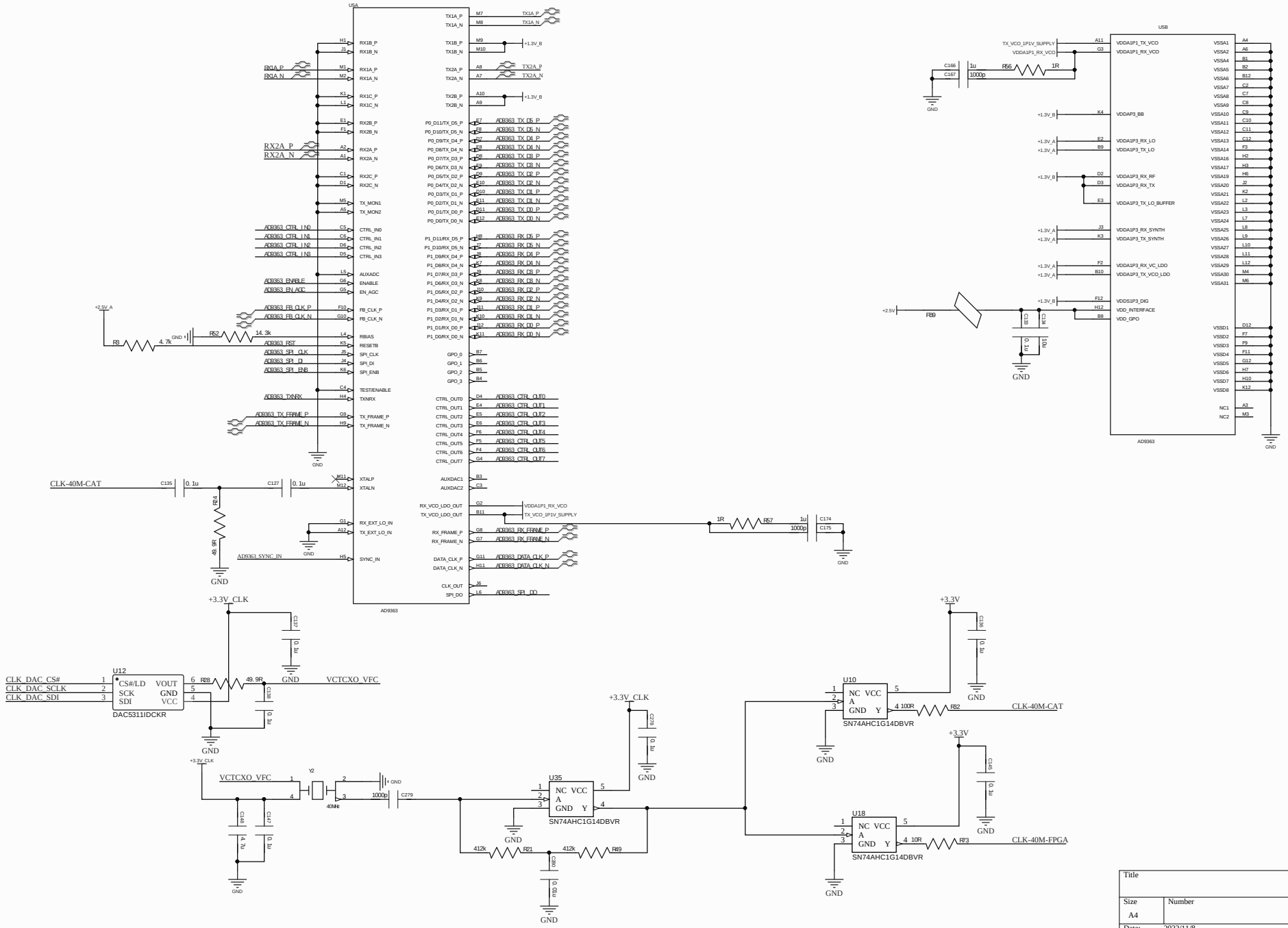

Title		
Size A4	Number	Revision
Date: 2022/11/8	Sheet of	
File: C:\Users\..\AD9363.SchDoc	Drawn By:	

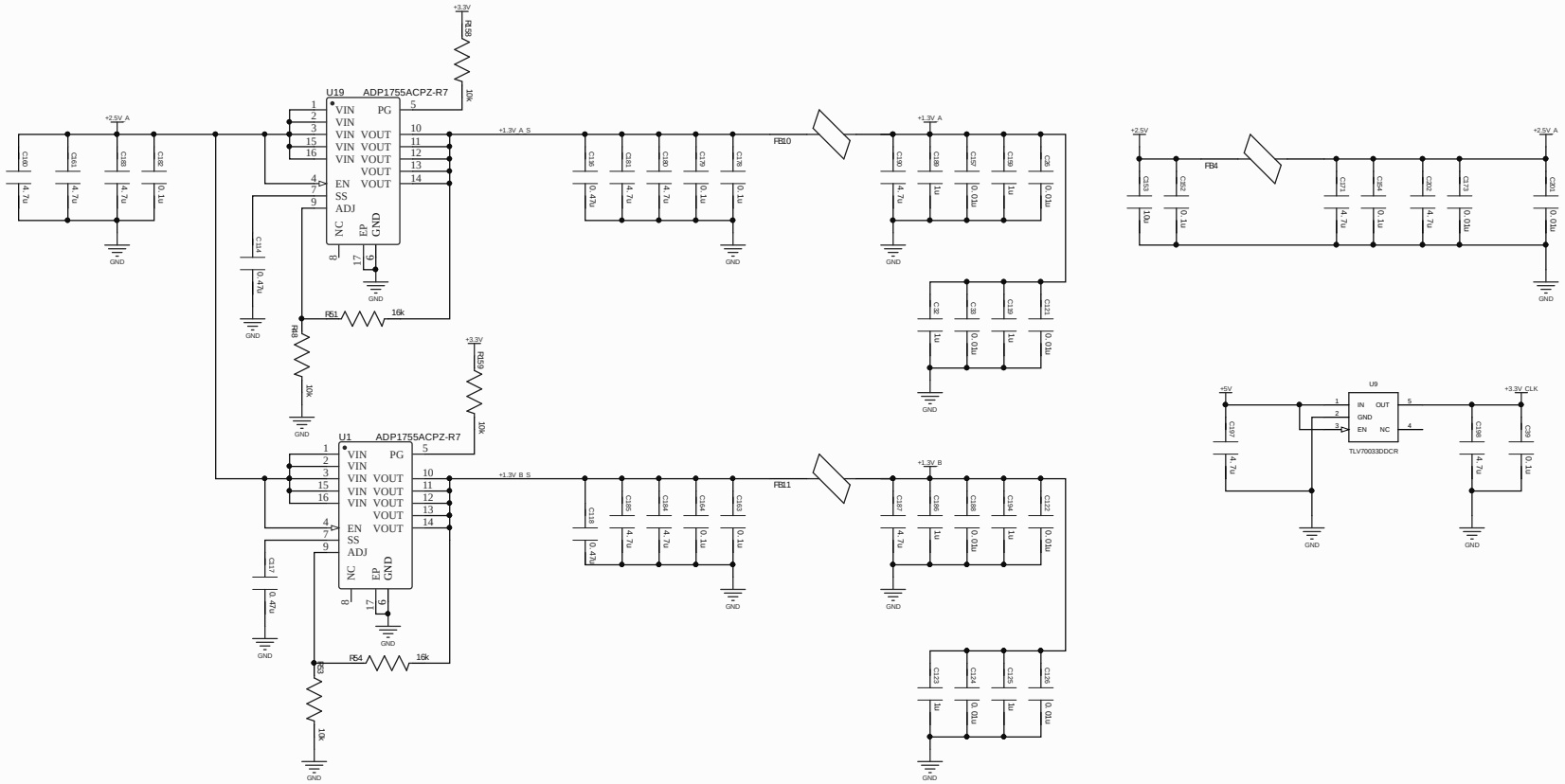

Title		
Size A4	Number	Revision
Date: 2022/11/8	Sheet of	
File: C:\Users\..\ANALOG_PWR.SchDoc	Drawn By:	

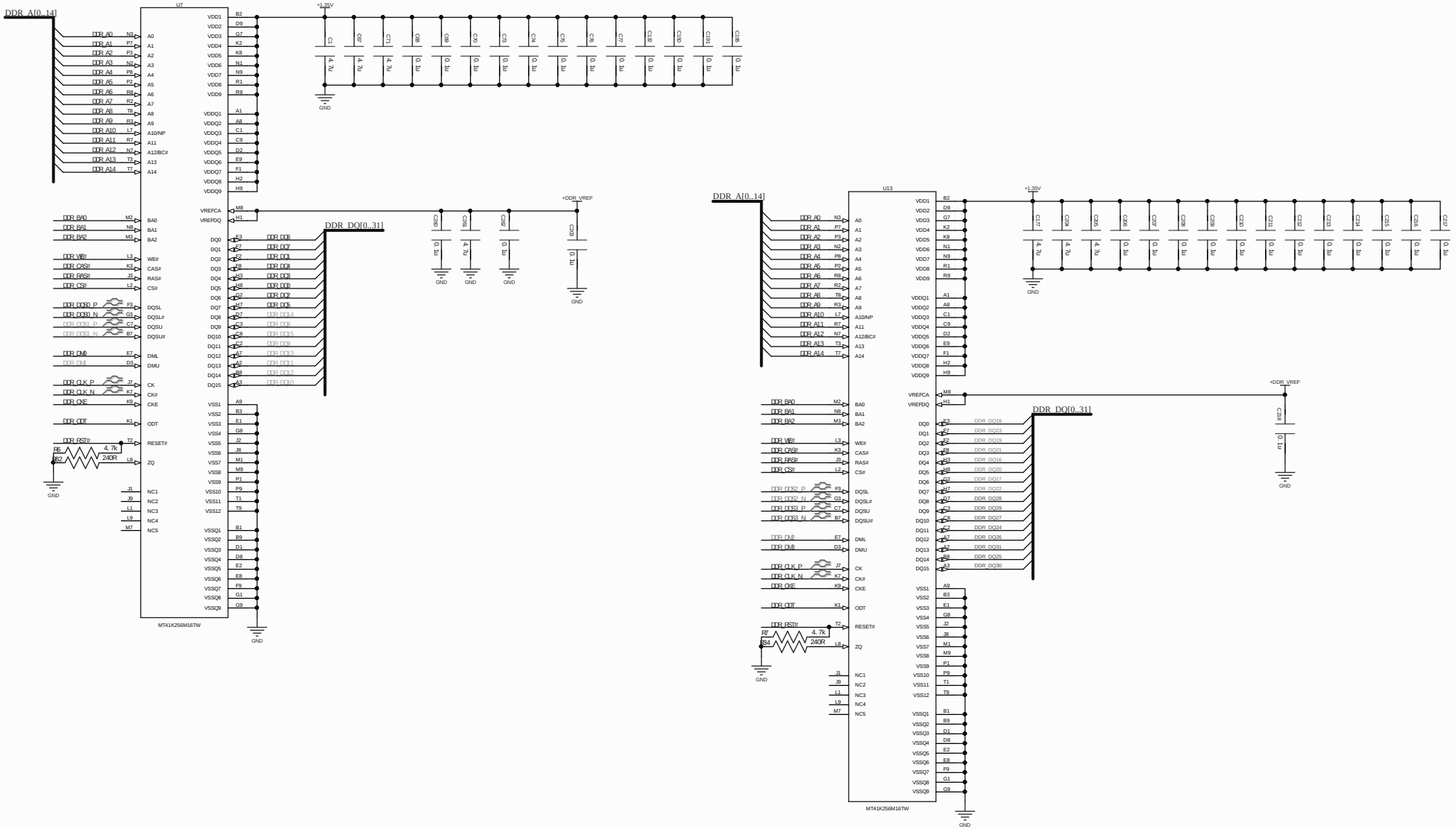

Title		
Size A4	Number	Revision
Date: 2022/11/8	Sheet of	
File: C:\Users\..\DDR3.SchDoc	Drawn By:	

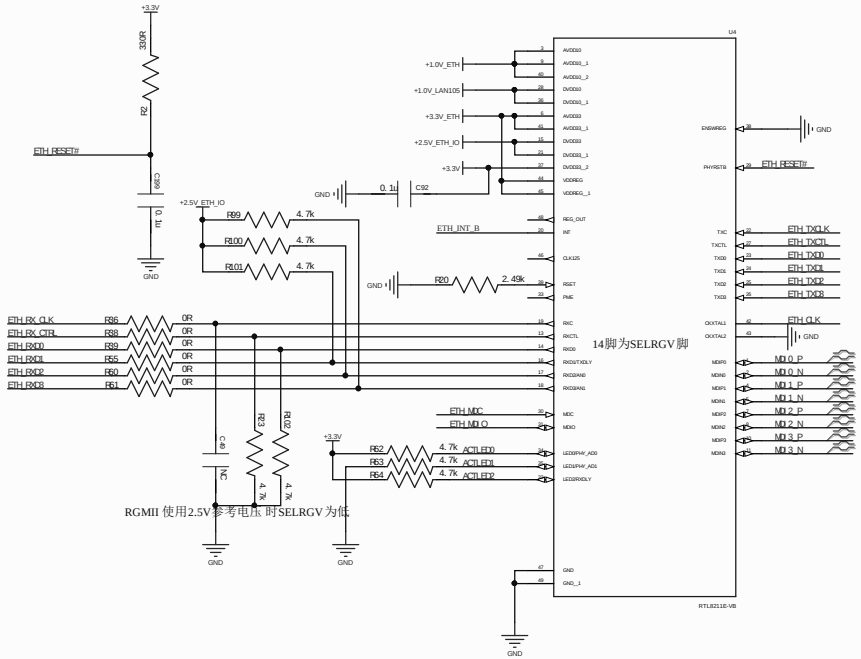

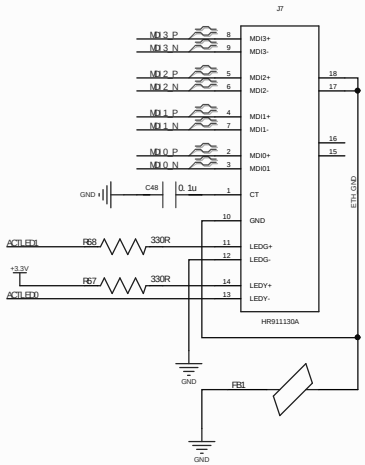

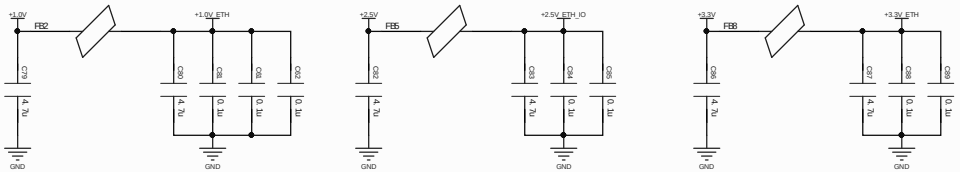

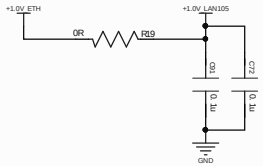

Title		
Size A4	Number	Revision
Date: 2022/11/8		Sheet of
File: C:\Users\...\ETHERNET.SchDoc		Drawn By:

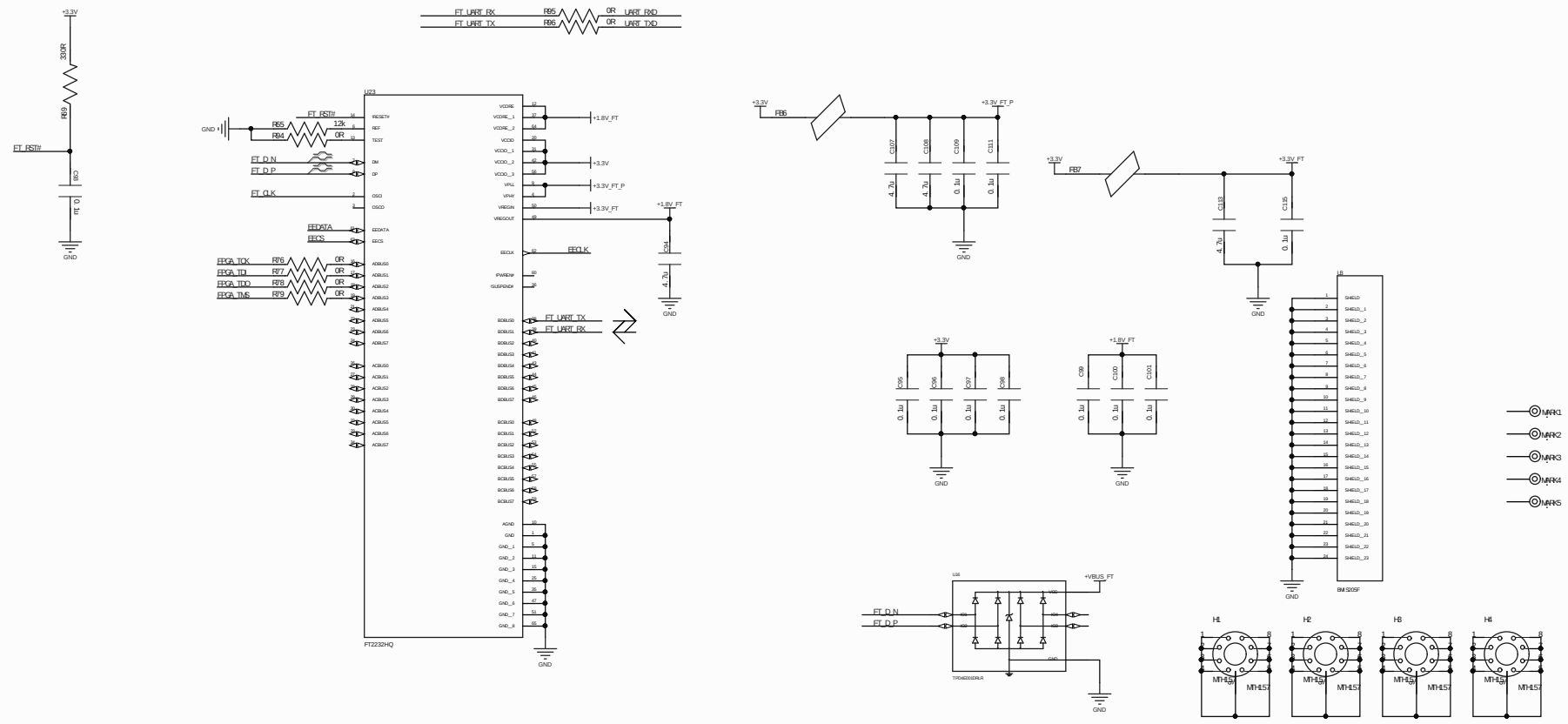

Title		
Size A4	Number	Revision
Date: 2022/11/8	Sheet of	
File: C:\Users\...\JTAG_UART.SchDoc	Drawn By:	

上电顺序1.0V->1.8V->(2.5V,3.3V,1.35V)

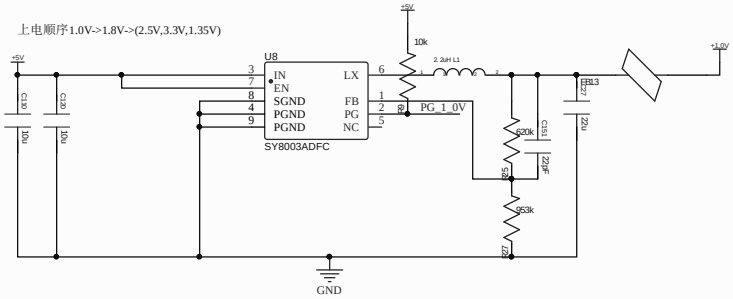

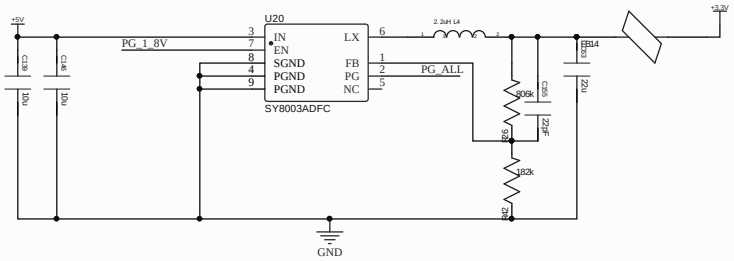

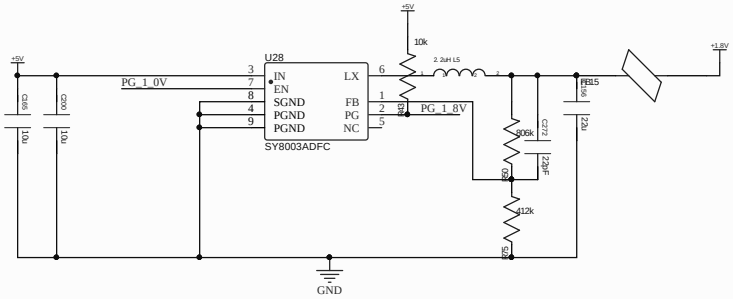

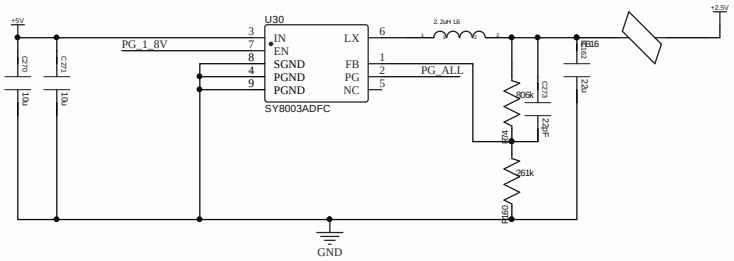

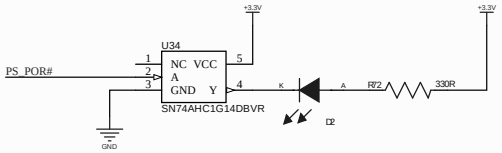

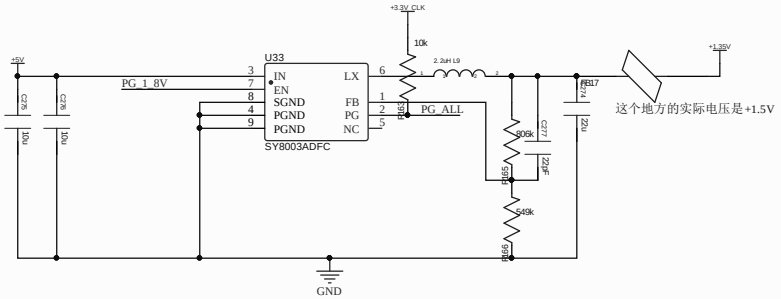

这个地方的实际电压是+1.5V

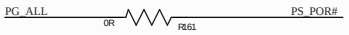

利用PG信号进行POR复位，当全部电压准备就绪时，为高

Title		
Size A4	Number	Revision
Date: 2022/11/8	Sheet of	
File: C:\Users\..\POWER.SchDoc	Drawn By:	

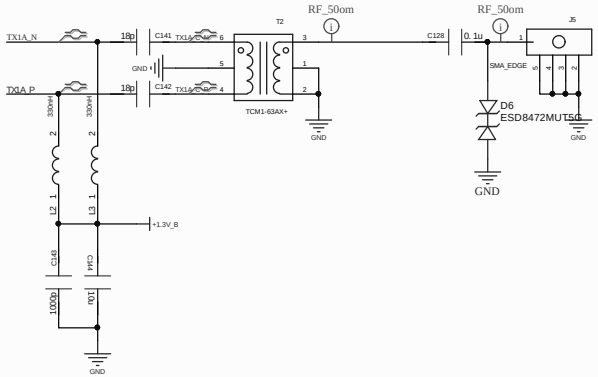

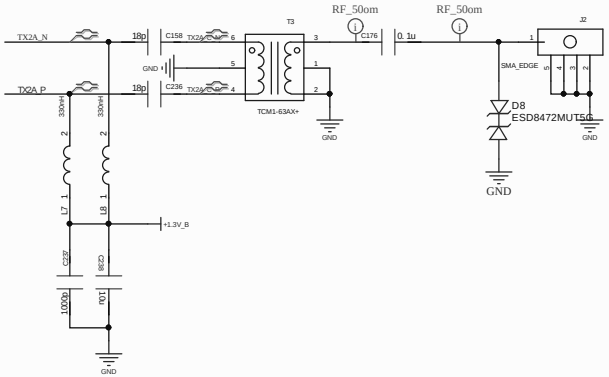

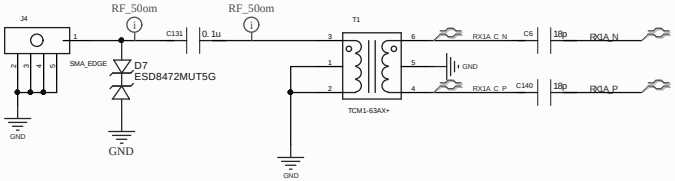

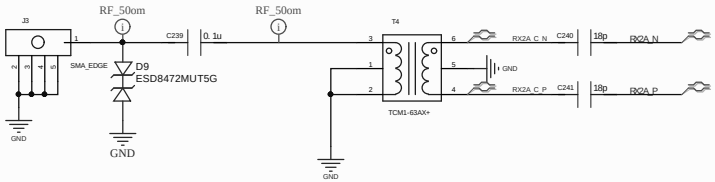

Title		
Size A4	Number	Revision
Date: 2022/11/8		Sheet of
File: C:\Users\...\RF_IN_OUT.SchDoc		Drawn By:

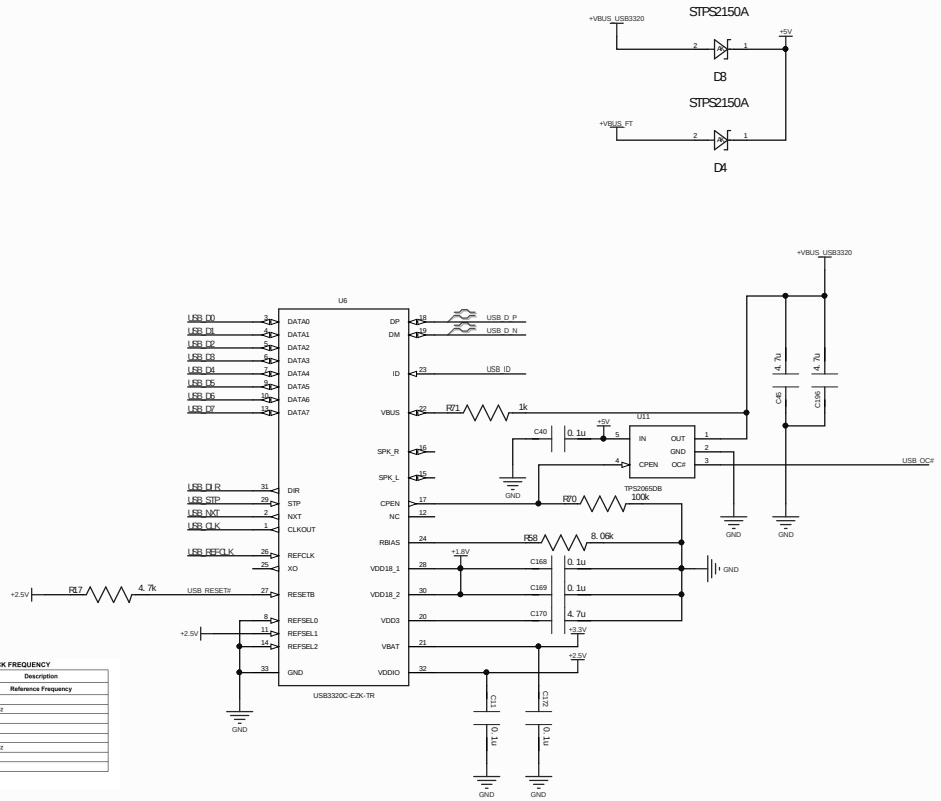

TABLE 5-10: CONFIGURATION TO SELECT REFERENCE CLOCK FREQUENCY

Configuration Pins			Description
REFSEL[2]	REFSEL[1]	REFSEL[0]	Reference Frequency
0	0	0	52 MHz
0	0	1	38.4 MHz
0	1	0	12 MHz
0	1	1	27 MHz
1	0	0	13 MHz
1	0	1	19.2 MHz
1	1	0	26 MHz
1	1	1	24 MHz

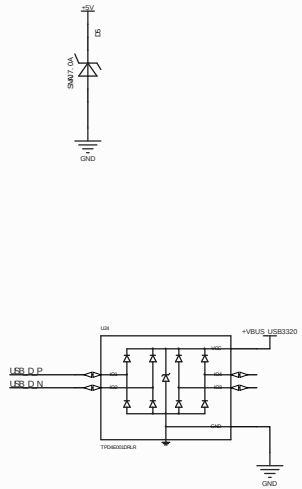

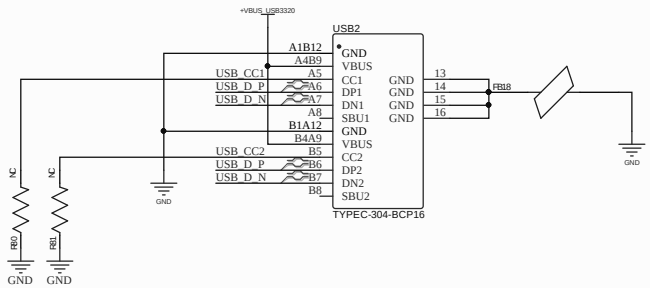

如果TUSB321不能正常工作，去除TUSB321焊接上R80、R81这两个电阻

Title		
Size A4	Number	Revision
Date: 2022/11/8	Sheet of	
File: C:\Users\...\USB3320_RAS_PI.SchDoc	Drawn By:	

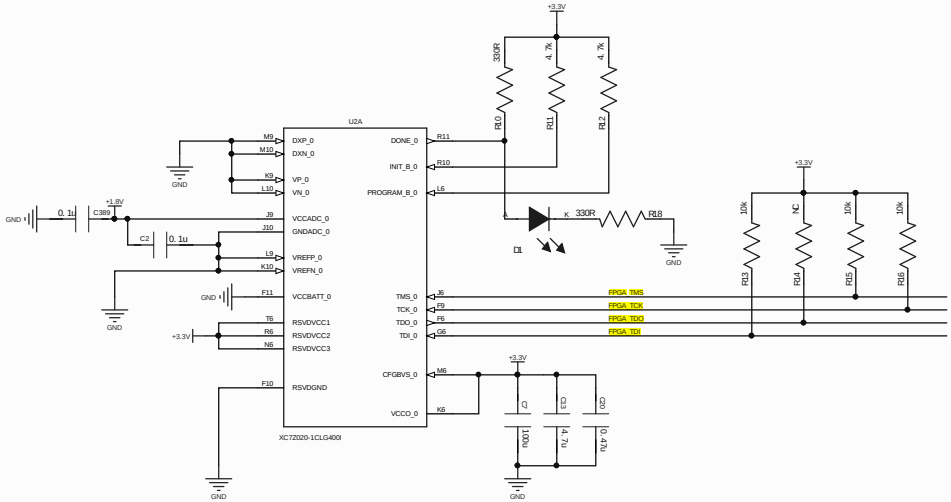

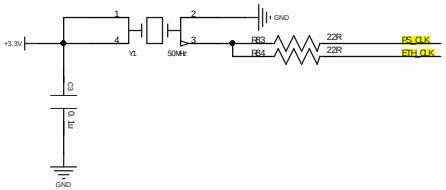

Title		
Size A4	Number	Revision
Date: 2022/11/8	Sheet of	
File: C:\Users\...\ZYNQ_BANK0.SchDoc	Drawn By:	

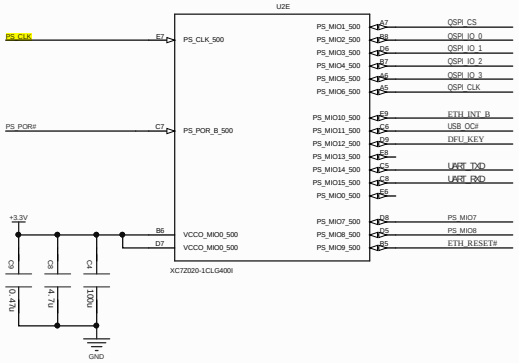

IN
OUT

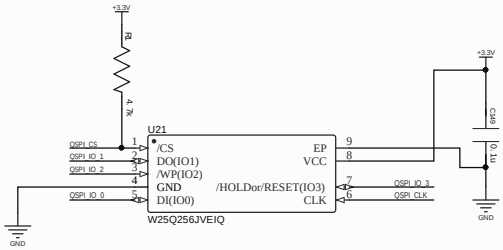

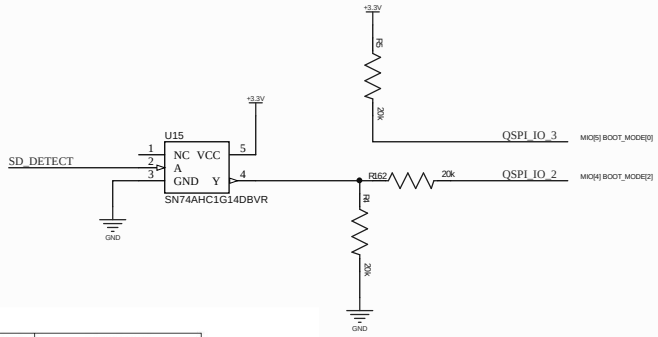

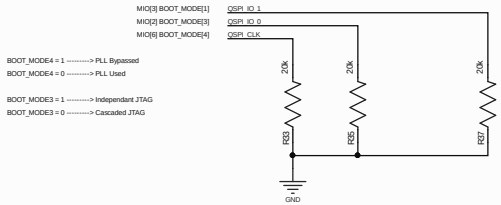

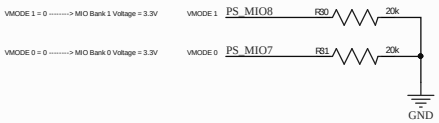

Table 6-4: **Boot Mode MIO Strapping Pins**

Pin-signal / Mode	MIO[8]	MIO[7]	MIO[6]	MIO[5]	MIO[4]	MIO[3]	MIO[2]
	VMODE[1]	VMODE[0]	BOOT_MODE[4]	BOOT_MODE[0]	BOOT_MODE[2]	BOOT_MODE[1]	BOOT_MODE[3]
Boot Devices							
JTAG Boot Mode; cascaded is most common(1)				0	0	0	**JTAG Chain Routing(2)** 0: Cascade mode 1: Independent mode
NOR Boot(3)				0	0	1	
NAND				0	1	0	
Quad-SPI(3)				1	0	0	
SD Card				1	1	0	
Mode for all 3 PLLs							
PLL Enabled			0	Hardware waits for PLL to lock, then executes BootROM.			
PLL Bypassed			1	Allows for a wide PS_CLK frequency range.			
MIO Bank Voltage(4)							
	Bank 1	**Bank 0**	Voltage Bank 0 includes MIO pins 0 thru 15. Voltage Bank 1 includes MIO pins 16 thru 53.				
2.5 V, 3.3 V	0	0					
1.8 V	1	1					

Title		
Size A4	Number	Revision
Date: 2022/11/8		Sheet of
File: C:\Users\...\ZYNQ_BANK500.SchDoc		Drawn By:

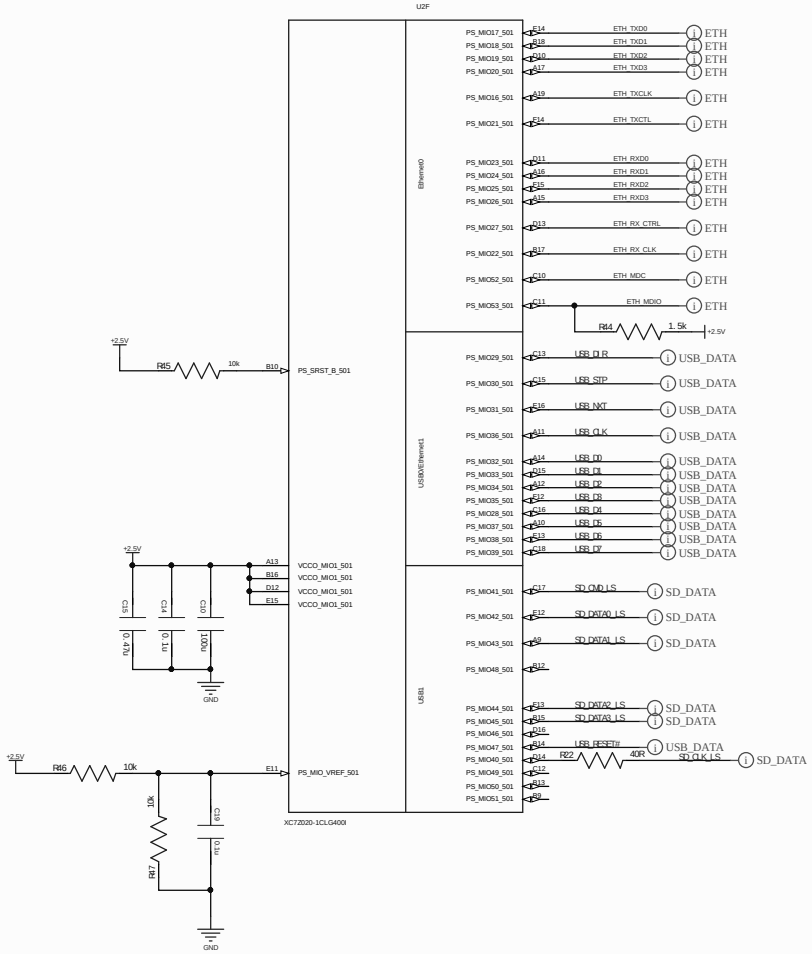

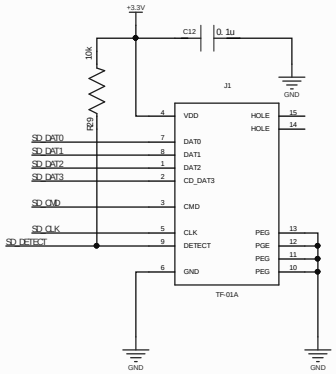

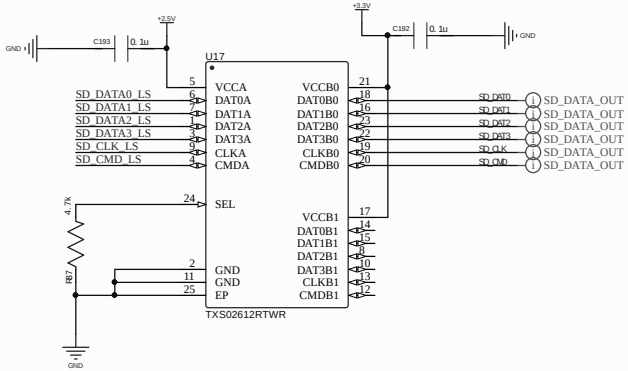

Title		
Size A4	Number	Revision
Date: 2022/11/8		Sheet of
File: C:\Users\..\ZYNQ_BANK501.SchDoc		Drawn By:

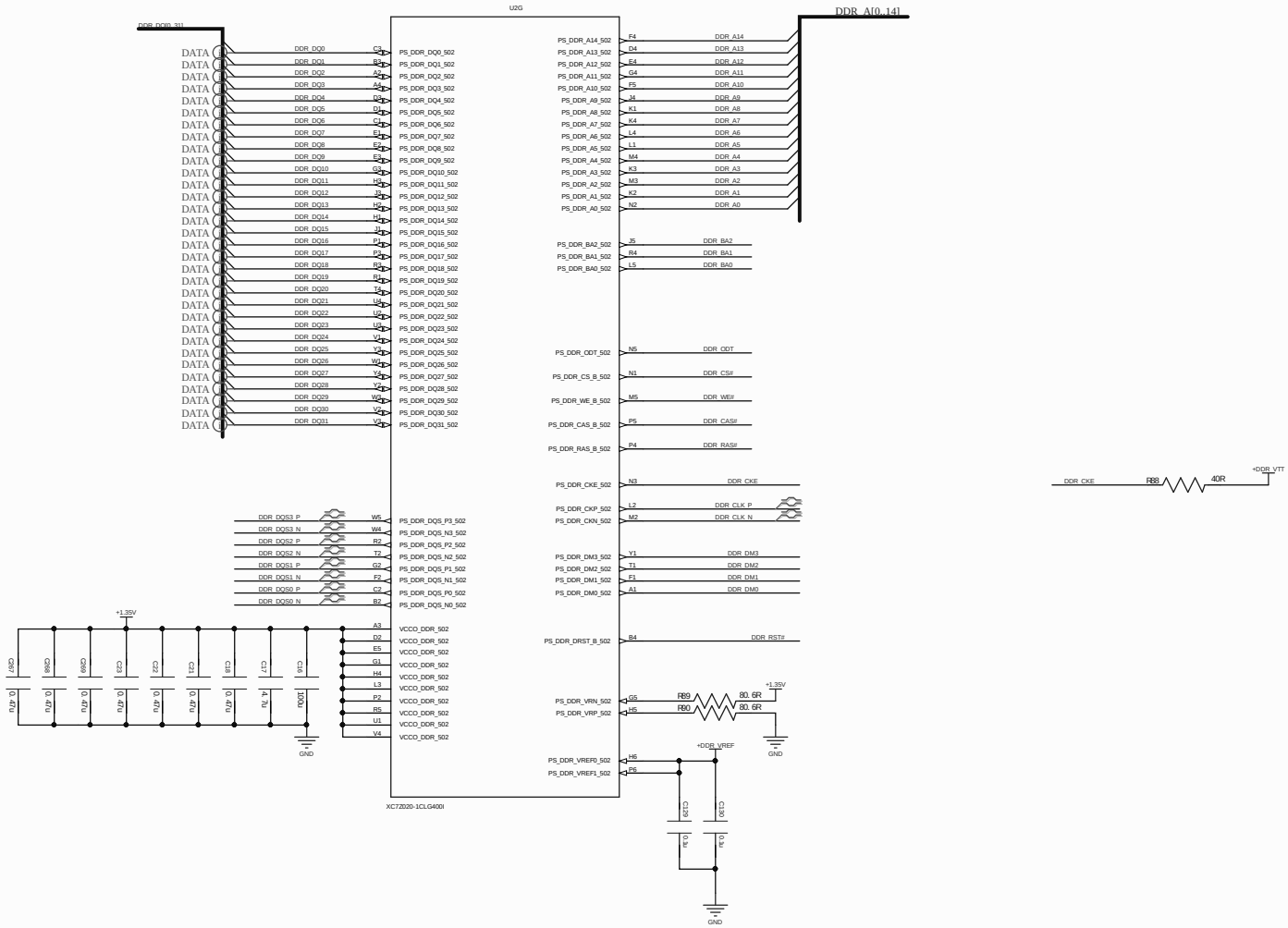

Title		
Size A4	Number	Revision
Date: 2022/11/8		Sheet of
File: C:\Users\...\ZYNQ_BANK502.SchDoc		Drawn By:

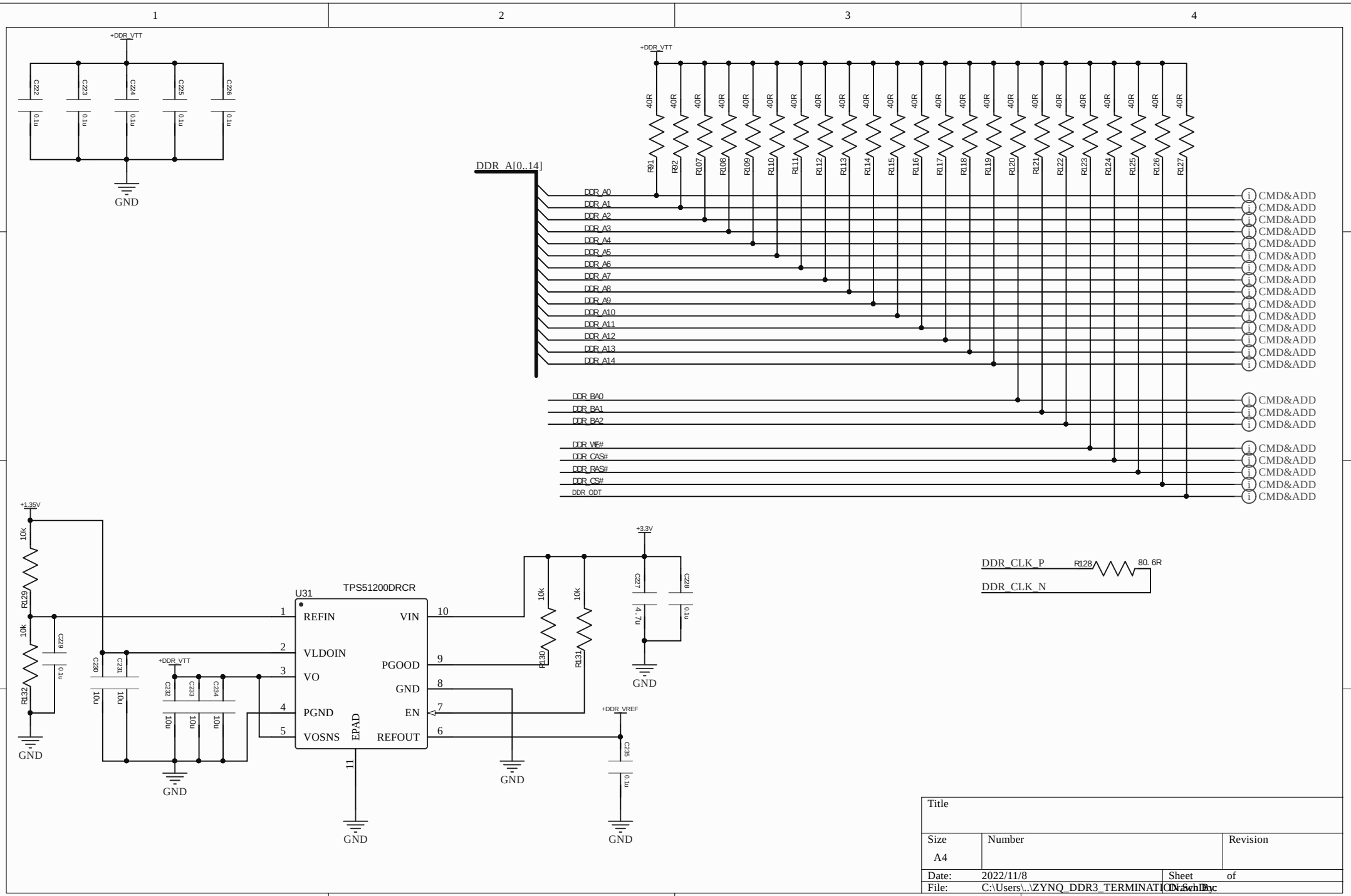
+DDR_VTT
C222 0.1u
C223 0.1u
C224 0.1u
C225 0.1u
C226 0.1u
GND
DDR_A[0..14]
R91 40R
R92 40R
R107 40R
R108 40R
R109 40R
R110 40R
R111 40R
R112 40R
R113 40R
R114 40R
R115 40R
R116 40R
R117 40R
R118 40R
R119 40R
R120 40R
R121 40R
R122 40R
R123 40R
R124 40R
R125 40R
R126 40R
R127 40R
DDR_A0
DDR_A1
DDR_A2
DDR_A3
DDR_A4
DDR_A5
DDR_A6
DDR_A7
DDR_A8
DDR_A9
DDR_A10
DDR_A11
DDR_A12
DDR_A13
DDR_A14
DDR_BA0
DDR_BA1
DDR_BA2
DDR_WE#
DDR_CAS#
DDR_RAS#
DDR_CS#
DDR_ODT
CMD&ADD
+1.35V
R129 10k
R132 10k
C229 0.1u
C230 10u
C231 10u
C232 10u
C233 10u
C234 10u
U31
TPS51200DRCR
REFIN
VLDOIN
VO
PGND
VOSNS
EPAD
VIN
PGOOD
GND
EN
REFOUT
+3.3V
R130 10k
R131 10k
C227 4.7u
C228 0.1u
+DDR_VREF
C235 0.1u
DDR_CLK_P
DDR_CLK_N
R128 80.6R
Title
Size A4
Number
Revision
Date: 2022/11/8
Sheet of
File: C:\Users\..\ZYNQ_DDR3_TERMINATION.SchDoc
Drawn by:

换PIN时注意BANK电压

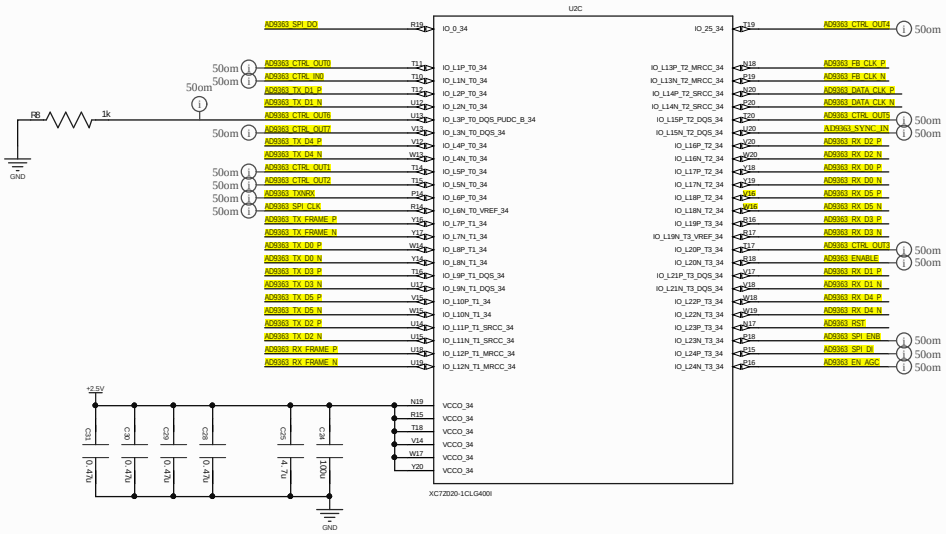

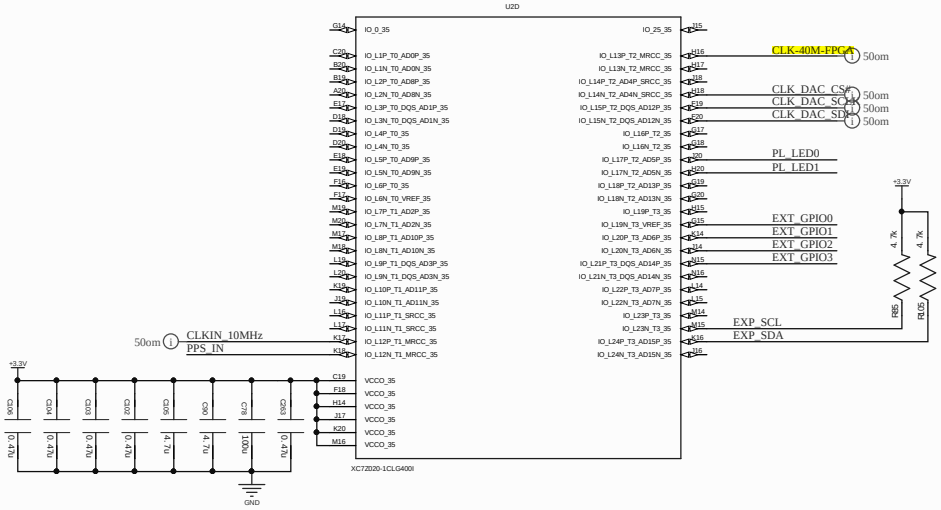

此处7z020与7z010不兼容，BNAK13 7020 only

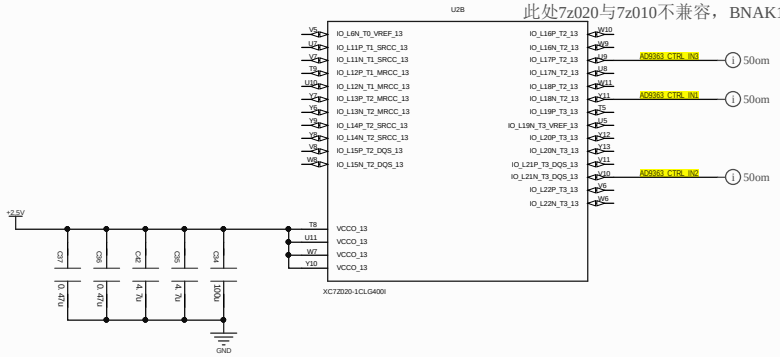

Title		
Size A4	Number	Revision
Date: 2022/11/8	Sheet of	
File: C:\Users\...\ZYNQ_PL_BANK.SchDoc	Drawn By:	

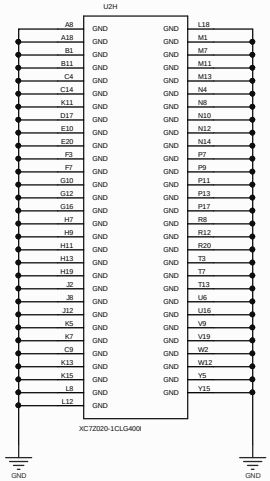

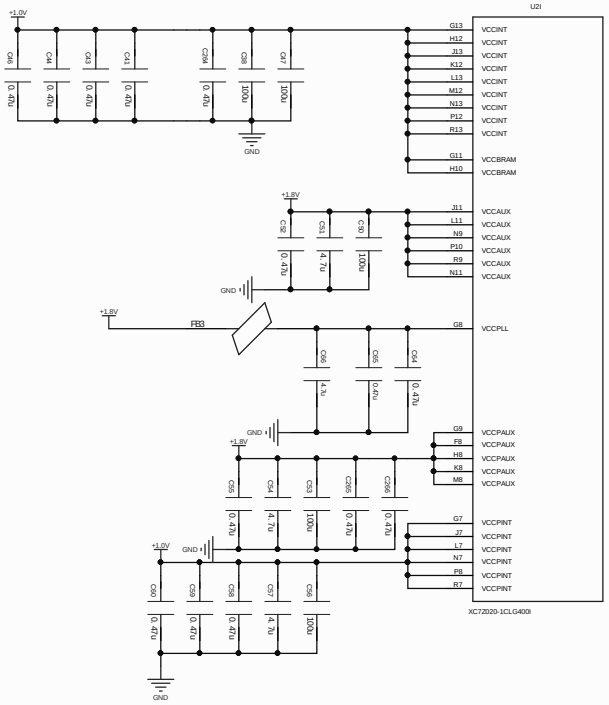

COMPANY:

Title		
Size A4	Number	Revision
Date: 2022/11/8		Sheet of
File: C:\Users\..\ZYNQ_PWR.SchDoc		Drawn By:

	10层				单线50				顶层隔层参考单线50				差分100			顶层隔层参考差分100					差分90		
Er	板厚	叠层结构		层次	阻抗	线宽	参考层	铜厚	阻抗	线宽	参考层		阻抗	线宽	间距	阻抗	线宽	间距	参考层		阻抗	线宽	间距
				TOP	50	**5mil**	L2	1OZ	50	**13mil**	L3		100	**4.1mil**	**7.5mil**	100	**9.2mil**	**7.5mil**	L3		90	**4.7mil**	**6mil**
4.2		3.2mil						0.5OZ															
4.2		4mil		L3	50	**5mil**	L2/L5	0.5OZ	/	/	/		100	**4mil**	**7mil**	/	/	/	/		90	**4.8mil**	**6mil**
4.2		12.6mil		L4	50	**5mil**	L2/L5	0.5OZ	/	/	/		100	**4mil**	**7mil**	/	/	/	/		90	**4.8mil**	**6mil**
4.2		4mil						0.5OZ															
4.2	1.6	5.5mil						0.5OZ															
4.2		4mil		L7	50	**5mil**	L6/L9	0.5OZ	/	/	/		100	**4mil**	**7mil**	/	/	/	/		90	**4.8mil**	**6mil**
4.2		12.6mil		L8	50	**5mil**	L6/L9	0.5OZ	/	/	/		100	**4mil**	**7mil**	/	/	/	/		90	**4.8mil**	**6mil**
4.2		4mil						0.5OZ															
4.2		3.2mil		BOT	50	**5mil**	L2	1OZ	/	/	/		100	**4.1mil**	**7.5mil**	/	/	/	/		90	**4.7mil**	**6mil**

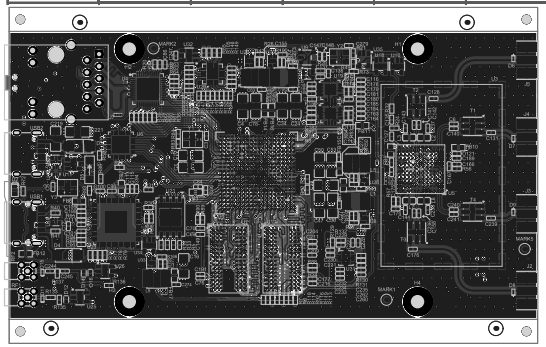

TOP01 SIG03 SIG04 SIG07 SIG08 BOTT10