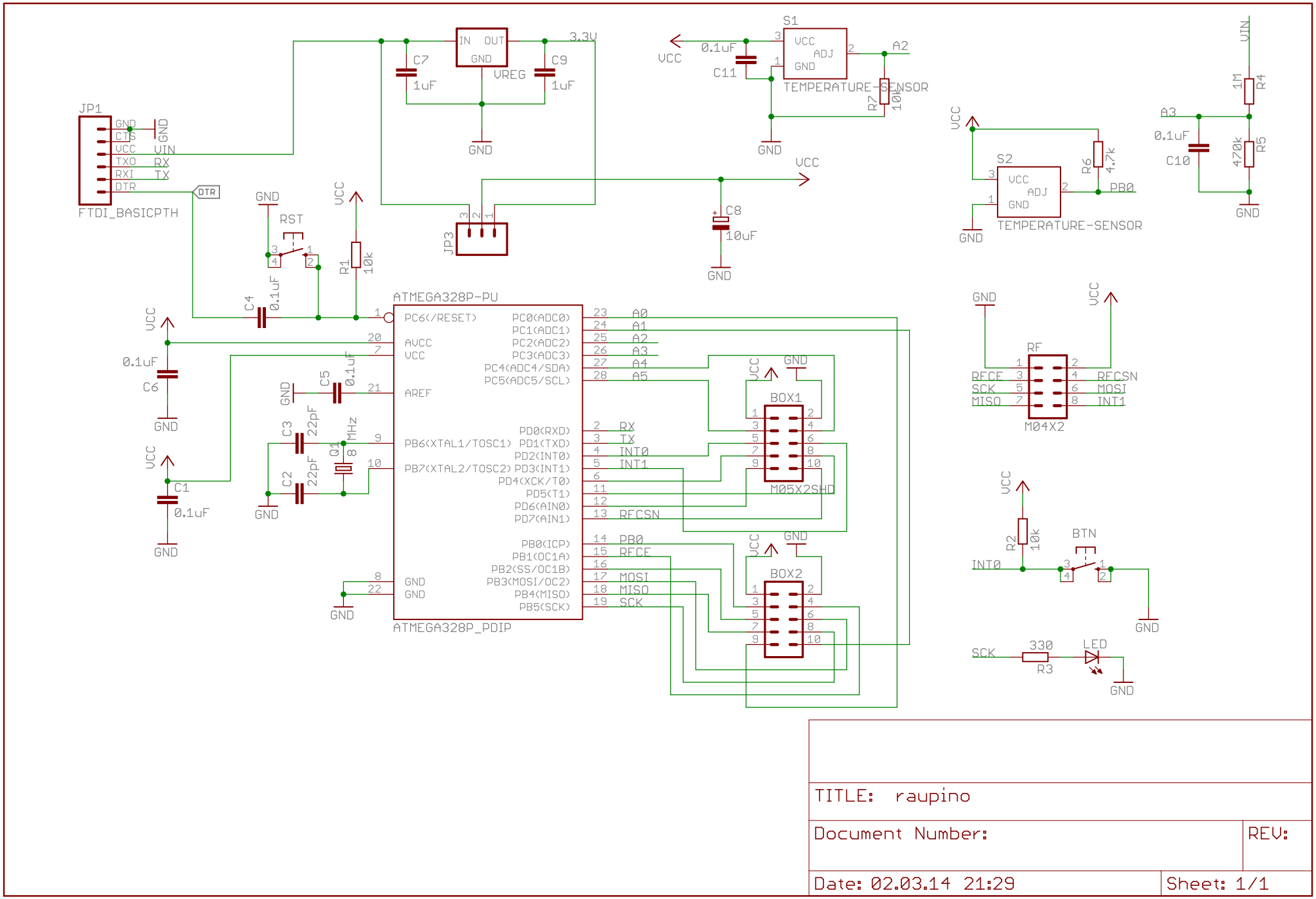

TITLE: raupino

Document Number:

REV:

Date: 02.03.14 21:29

Sheet: 1/1