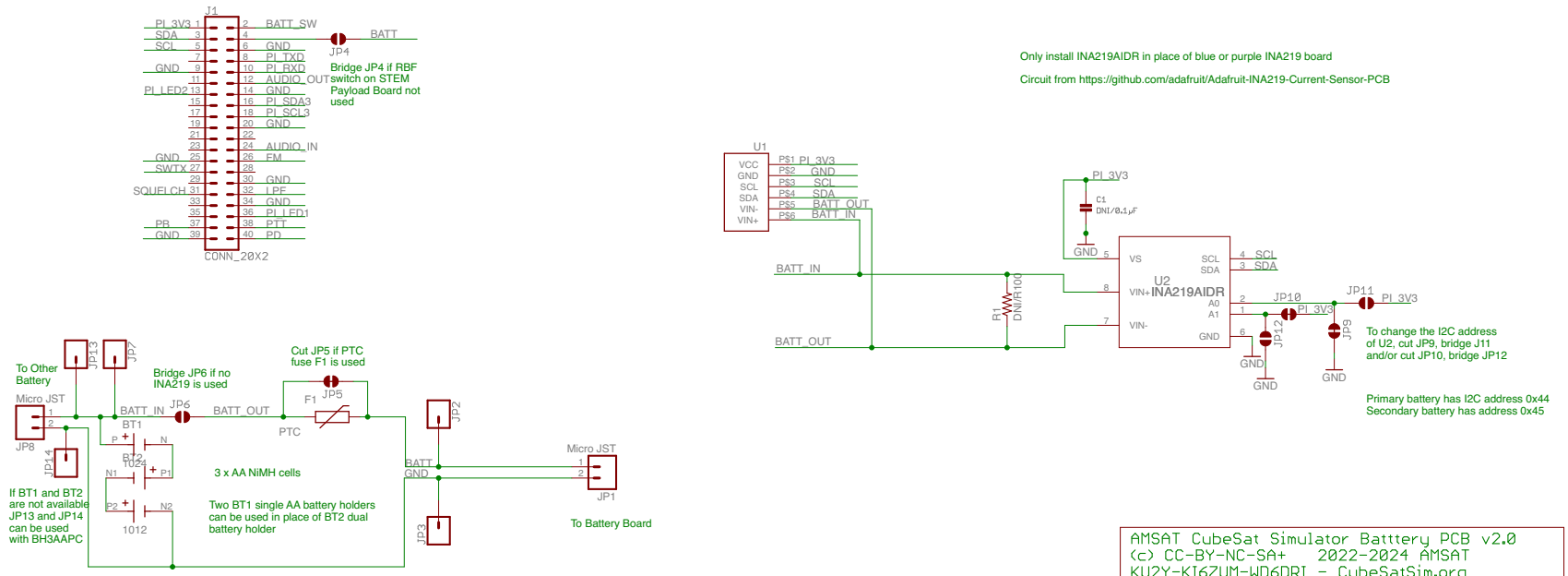

AMSAT CubeSat Simulator Batttery PCB v2.0
(c) CC-BY-NC-SA+ 2022-2024 AMSAT
KU2Y-KI6ZUM-WD6DRI - CubeSatSim.org

TITLE: cubesatsim-battery-v2.0	
Document Number:	REV:
Date: 9/7/24 5:02 PM	Sheet: 1/1