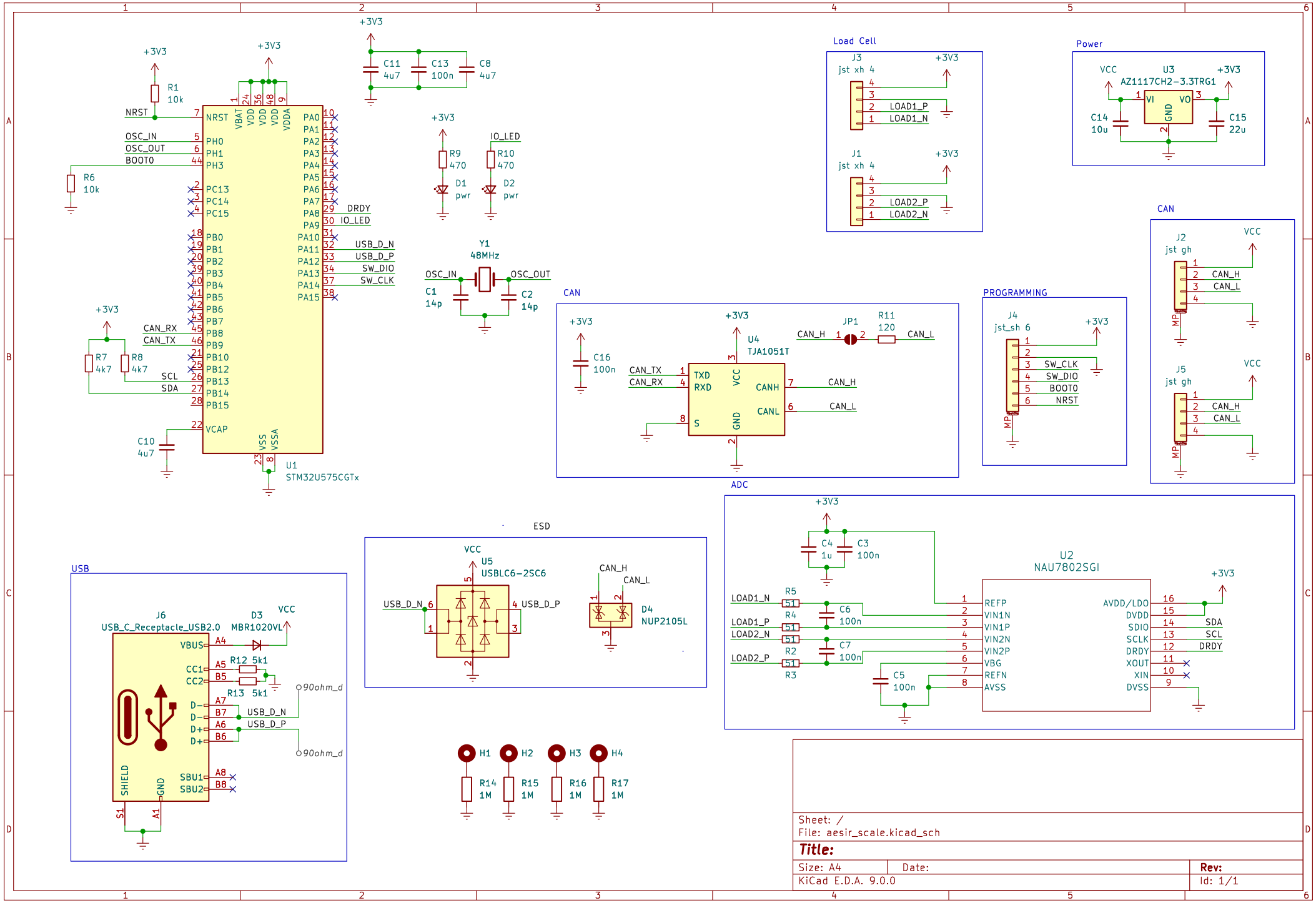
U1
STM32U575CGTx
NRST
OSC_IN
OSC_OUT
BOOT0
CAN_RX
CAN_TX
SCL
SDA
DRDY
IO_LED
USB_D_N
USB_D_P
SW_DIO
SW_CLK
+3V3
R1 10k
R6 10k
R7 4k7
R8 4k7
C10 4u7
C11 4u7
C13 100n
C8 4u7
R9 470
R10 470
D1 pwr
D2 pwr
Y1 48MHz
C1 14p
C2 14p
Load Cell
J3 jst xh 4
J1 jst xh 4
LOAD1_P
LOAD1_N
LOAD2_P
LOAD2_N
Power
U3 AZ1117CH2-3.3TRG1
VCC
C14 10u
C15 22u
CAN
C16 100n
U4 TJA1051T
TXD
RXD
VCC
GND
CANH
CANL
S
JP1
R11 120
PROGRAMMING
J4 jst_sh 6
J2 jst gh
J5 jst gh
ADC
C4 1u
C3 100n
U2 NAU7802SGI
REFP
VIN1N
VIN1P
VIN2N
VIN2P
VBG
REFN
AVSS
AVDD/LDO
DVDD
SDIO
SCLK
DRDY
XOUT
XIN
DVSS
R5 51
R4 51
R2 51
R3 51
C6 100n
C7 100n
C5 100n
ESD
U5 USBLC6-2SC6
D4 NUP2105L
USB
J6 USB_C_Receptacle_USB2.0
D3 MBR1020VL
VBUS
CC1
CC2
R12 5k1
R13 5k1
D-
D+
SHIELD
GND
SBU1
SBU2
90ohm_d
H1
H2
H3
H4
R14 1M
R15 1M
R16 1M
R17 1M
Sheet: /
File: aesir_scale.kicad_sch
Title:
Size: A4
Date:
Rev:
KiCad E.D.A. 9.0.0
Id: 1/1