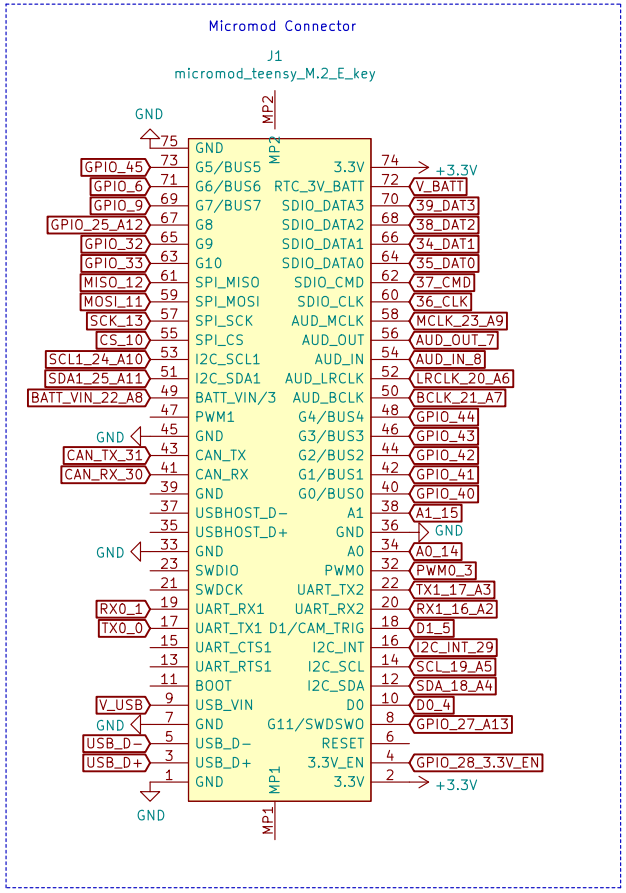

Teensy Pin mapping:
GPIO 20: IO fault signal
GPIO 06: IO1
GPIO 09: IO2
GPIO 32: IO3
GPIO 33: IO4
GPIO 29: SPI CS1, IO
GPIO 27: SPI CS2, expansion 1
GPIO 04: SPI CS3, expansion 2
GPIO 28: Gate Driver
GPIO 45: Gate Driver
GPIO 42: Gate Driver
GPIO 43: Gate Driver
GPIO 44: Gate Driver
GPIO 05: Gate driver
GPIO 41: Gate Driver
GPIO 40: Gate Driver
GPIO 33: ENC Z
GPIO 37: ENC B
GPIO 36: ENC A
GPIO 39: SPI CS
GPIO 38: SPI CS
GPIO 34: SPI CS

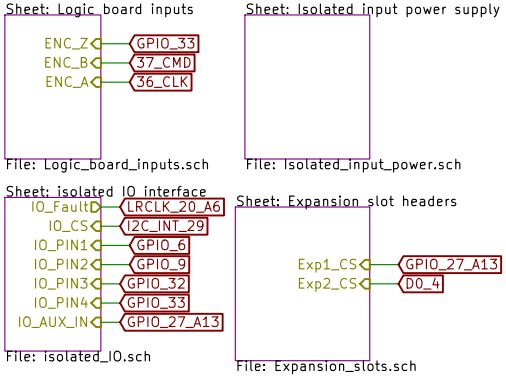

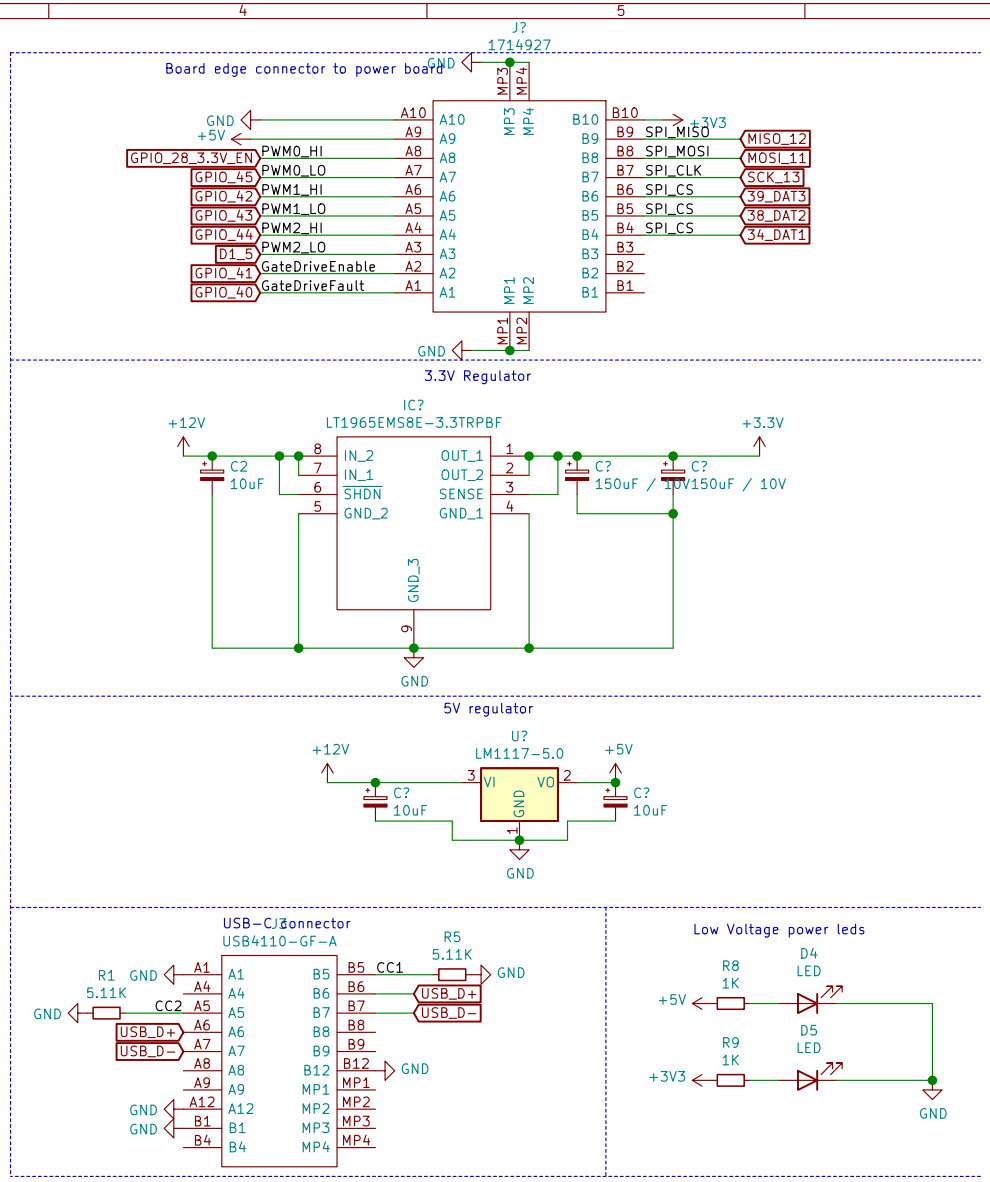

Sheet: /
File: high voltage servo drive.sch

Title: MCU connector and isolated input power

Size: A4	Date:	Rev:
KiCad E.D.A. kicad (5.1.10)−1		Id: 1/5

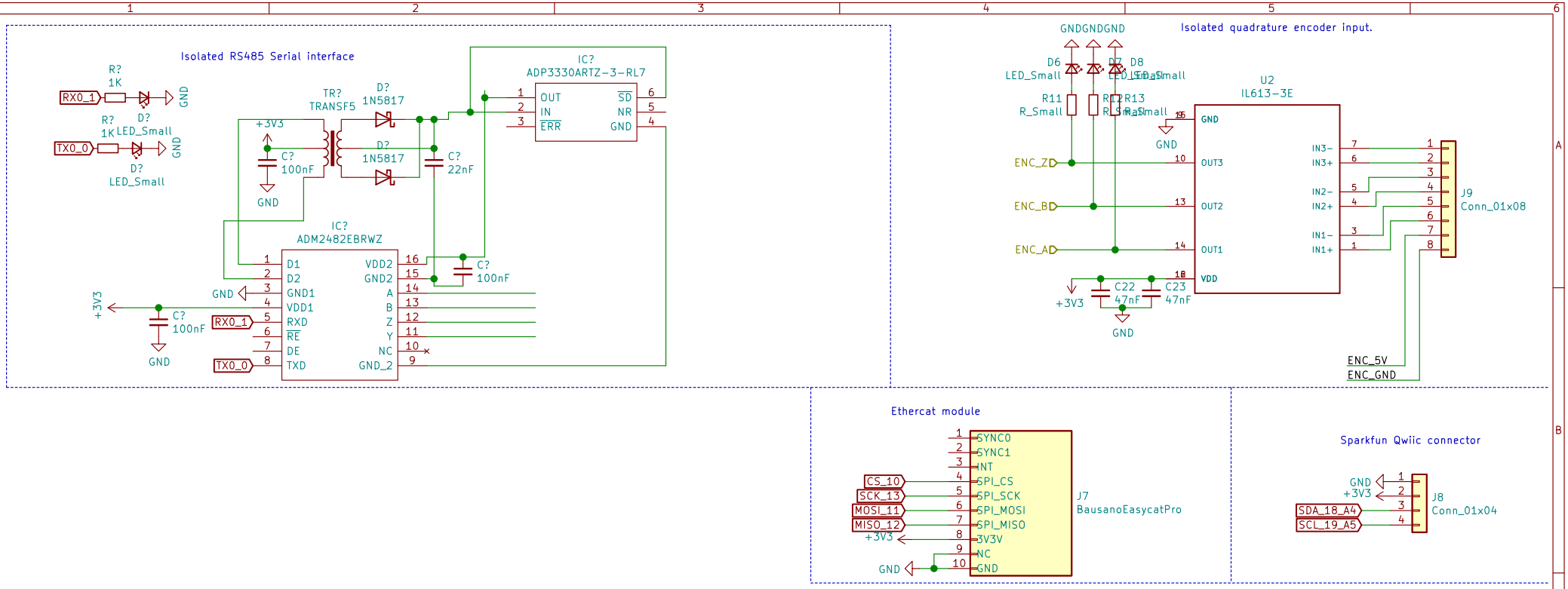

Sheet: /Logic board inputs/
File: Logic_board_inputs.sch

Title:

Size: A4	Date:	**Rev:**
KiCad E.D.A. kicad (5.1.10)-1		Id: 2/5

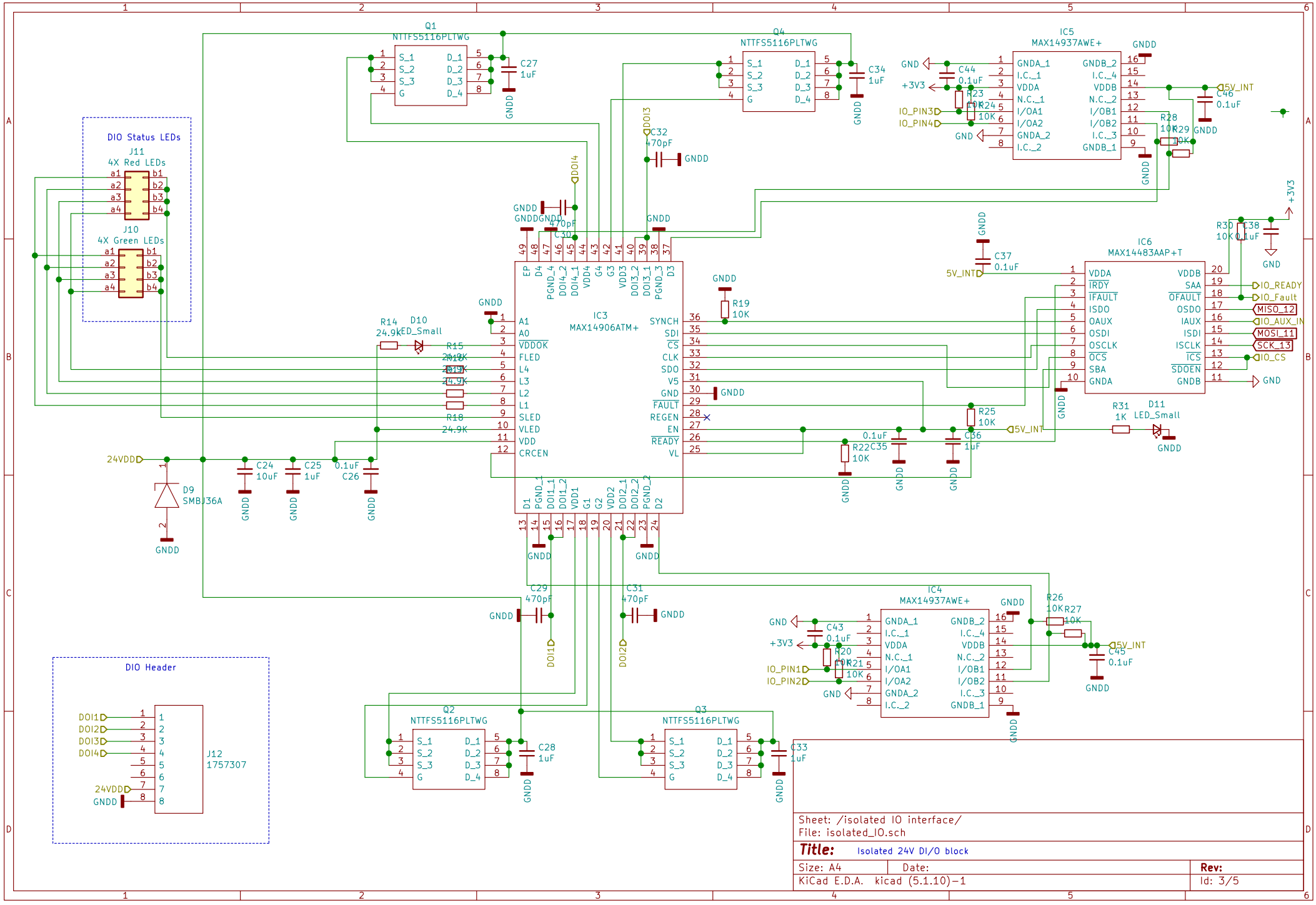
Q1
NTTFS5116PLTWG
Q4
NTTFS5116PLTWG
IC5
MAX14937AWE+
IC3
MAX14906ATM+
IC6
MAX14483AAP+T
IC4
MAX14937AWE+
Q2
NTTFS5116PLTWG
Q3
NTTFS5116PLTWG
DIO Status LEDs
J11
4X Red LEDs
J10
4X Green LEDs
DIO Header
J12
1757307
D9
SMBJ36A
D10
LED_Small
D11
LED_Small
24VDDD
GNDD
GND
+3V3
5V_INT
IO_PIN1
IO_PIN2
IO_PIN3
IO_PIN4
DOI1
DOI2
DOI3
DOI4
IO_READY
IO_Fault
MISO_12
IO_AUX_IN
MOSI_11
SCK_13
IO_CS
Sheet: /isolated IO interface/
File: isolated_IO.sch
Title: Isolated 24V DI/O block
Size: A4
Date:
Rev:
KiCad E.D.A. kicad (5.1.10)-1
Id: 3/5

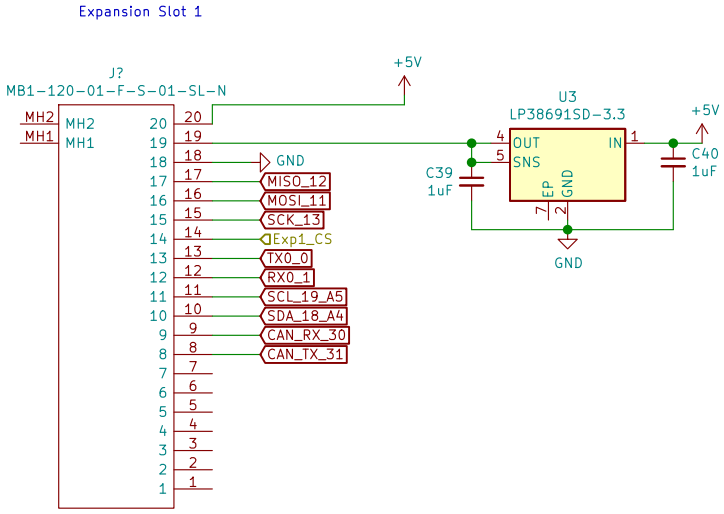

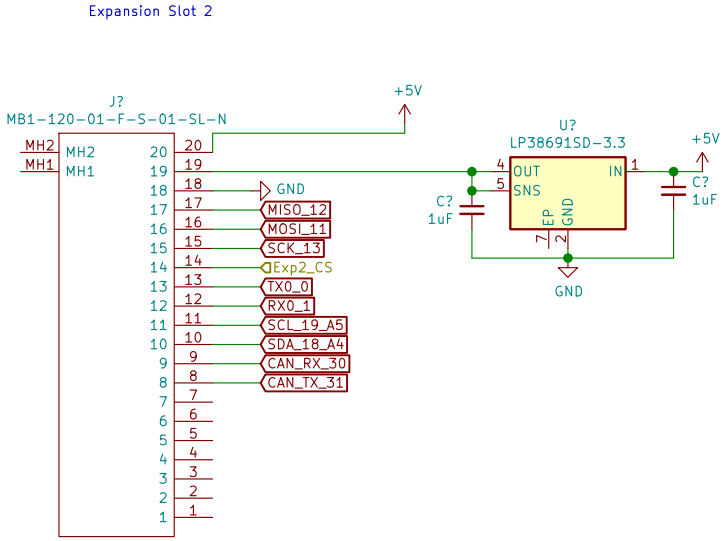

Sheet: /Expansion slot headers/
File: Expansion_slots.sch

Title:

Size: A4	Date:	**Rev:**
KiCad E.D.A. kicad (5.1.10)-1		Id: 4/5

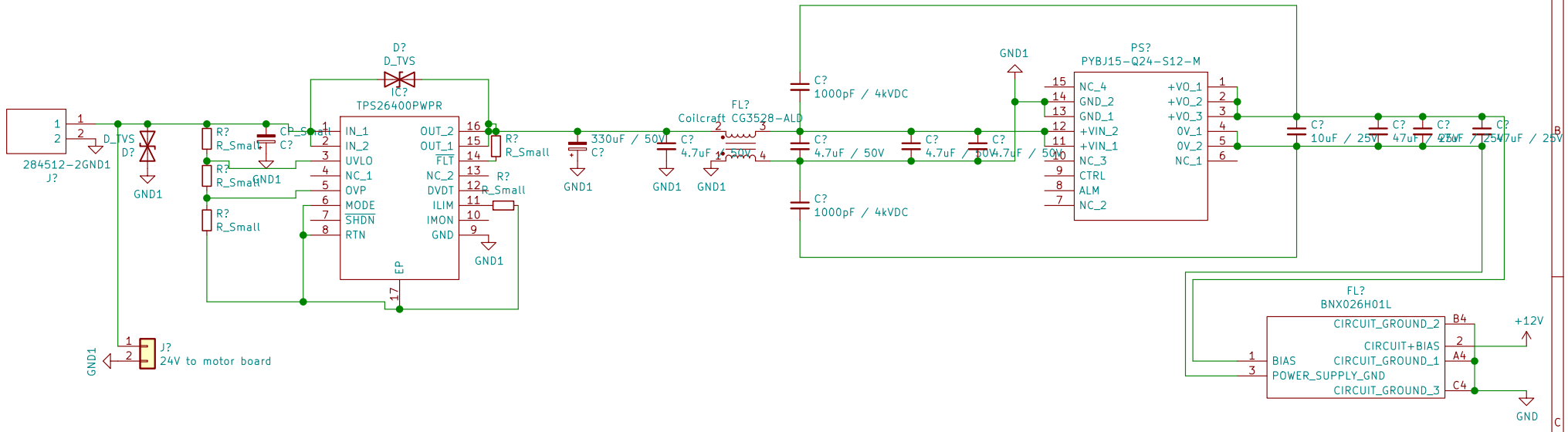

Sheet: /Isolated input power supply/
File: Isolated_input_power.sch

Title:

Size: A4	Date:	Rev:
KiCad E.D.A. kicad (5.1.10)-1		Id: 5/5