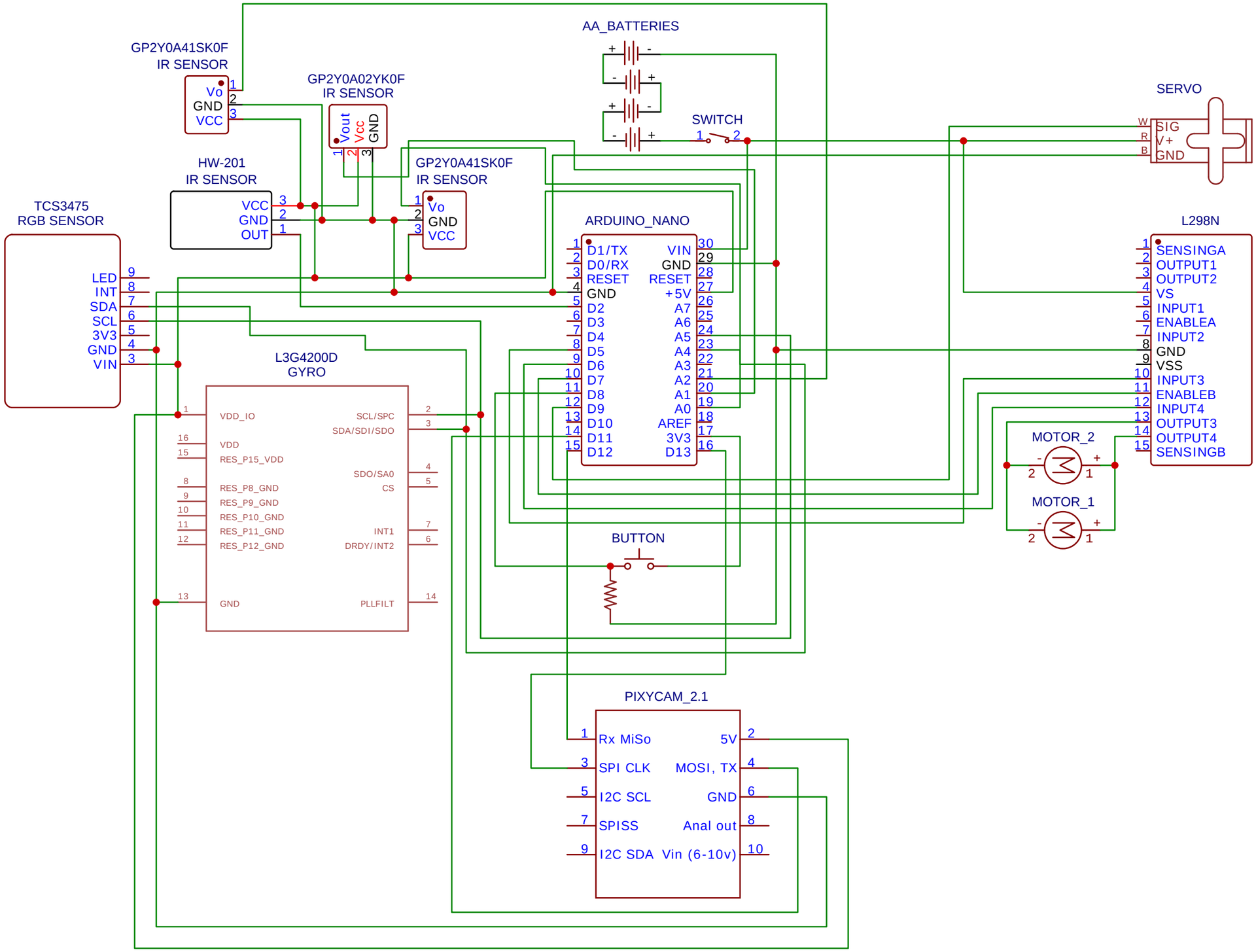

TITLE: WRO FE SCHEMATIC DIAGRAM		REV: 1.0
	Company: TEAM V^3	Sheet: 1/1
	Date: 2023-08-14 Drawn By: vedantnehete	